Dannmar Equipment
646 Flinn Avenue, Suite A
Moorpark, CA 93021
Tel: 1-877-432-6627
www.dannmar.com

D-10 SERIES USER MANUAL

Model: ***D-10/AC***
D-10/ACX

TWO POST LIFT
ASYMMETRICAL
10,000 POUND CAPACITY

Model: ***D-10/CX***

TWO POST LIFT
SYMMETRICAL
10,000 POUND CAPACITY

Rev D 06012016
P/N# 199824

Reference ANSI/ALI ALIOM safety requirments for installation and service of automotive lifts before installing lift.

CAUTION
The safe operating temperature range for this product is 41° F - 104° F

PLEASE READ THE ENTIRE CONTENTS OF THIS MANUAL PRIOR TO INSTALLATION AND OPERATION. BY PROCEEDING WITH LIFT INSTALLATION AND OPERATION YOU AGREE THAT YOU FULLY UNDERSTAND AND COMPREHEND THE FULL CONTENTS OF THIS MANUAL. FORWARD THIS MANUAL TO ALL OPERATORS. FAILURE TO OPERATE THIS EQUIPMENT AS DIRECTED MAY CAUSE INJURY OR DEATH.

TABLE OF CONTENTS

IMPORTANT NOTICE 3
DEFINITIONS OF HAZARD LEVELS 3
IMPORTANT SAFETY INSTRUCTIONS 4
OWNER / EMPLOYER RESPONSIBILITIES 6
D-10/AC PARTS LIST 8
D-10/AC ASSEMBLY DIAGRAM 9
D-10/ACX PARTS LIST 10
D-10/ACX ASSEMBLY DIAGRAM 11
D-10/CX PARTS LIST 12
D-10/CX ASSEMBLY DIAGRAM 13
INSTALLATION INSTRUCTIONS 14
CONCRETE SPECIFICATIONS 15
EQUALIZER CABLE ROUTING 23
POST INSTALLATION CHECK OFF 30
LUBRICATION POINTS 30
OPERATION INSTRUCTIONS 32
MAINTENANCE INSTRUCTIONS 36
WIRE ROPE INSPECTION AND MAINTENANCE 38
LIFT LOCKOUT / TAGOUT PROCEDURE 39
SAFE LIFT OPERATION 40
TROUBLESHOOTING GUIDE 42
WARRANTY INFORMATION 46
MAINTENANCE RECORDS 47

PRODUCT SPECIFICATIONS

MODEL	D-10/AC	D-10/ACX	D-10/CX
Maximum Lift Capacity	10,000 lb.	10,000 lb.	10,000 lb.
Power Unit	220 V, 60Hz, 30 Amp, Single Ph.	220 V, 60Hz, 30 Amp, Single Ph.	220 V, 60Hz, 30 Amp, Single Ph.
Max. Lifting Height	73.8 "	73.8 "	73.8 "
Min. Pad Height	4 "	4 "	4 "
Hydraulic Oil Capacity / Type	12 qts. AW-32 or Dexron III or VI hydraulic fluid	12 qts. AW-32 or Dexron III or VI hydraulic fluid	12 qts. AW-32 or Dexron III or VI hydraulic fluid
Overall Dimensions	145 " H x 130.5 " W	145 " H x 143.5 " W	145 " H x 145 " W
Shipping Weight	1640 lb.	1650 lb.	1654 lb.

IMPORTANT NOTICE

1. Read this manual thoroughly before installing, operating, or maintaining this lift.
2. This lift is designed for indoor use only, and should not be installed in a pit or depression.
3. The floor on which the lift is to be installed must be 4-inch minimum thickness concrete, with a minimum compressive strength of 3000 psi, and reinforced with steel bar.
4. The lifts have specific electrical requirements as described in the Installation Instructions section of this manual.
5. This lift has a minimum ceiling height requirement as described in the Installation Instructions section of this manual.
6. Failure by the owner to provide the recommended shelter, mounting surface, electrical supply, and ceiling height could result in unsatisfactory lift performance, property damage, or personal injury.
7. Do not attempt to install this lift if you have never been trained on basic automotive lift installation procedures. Reference ANSI/ALI ALIOM Safety requirements for Installation and Service of Automotive Lifts.
8. Never attempt to lift components without proper lifting tools such as forklift or cranes. Stay clear of any moving parts that can fall and cause injury. These instructions must be followed to insure proper installation and operation of your lift. Failure to comply with these instructions can result in serious bodily harm and void product warranty.
9. Dannmar Equipment will assume no liability for loss or damage of any kind, expressed or implied resulting from improper installation or use of this product.

DEFINITIONS OF HAZARD LEVELS

Identify the hazard levels used in this manual with the following definitions and signal words: Watch for this symbol: Alerts immediate hazards which will result in severe personal injury or death.

DANGER

Watch for this symbol: Alerts hazards or unsafe practices which could result in severe personal injury or death.

WARNING

Watch for this symbol: Alerts hazards or unsafe practices which may result in minor personal injury, product or property damage.

CAUTION

Lubricate all cable sheaves, bearings, and shafts with grease prior to operating the lift. Lubricate all on an annual basis.

Motors and all electrical components are not sealed against the weather and moisture. Install this lift in a protected indoor location. Failure by the owner to provide the recommended shelter could result in unsatisfactory lift performance, property damage, or personal injury.

IMPORTANT SAFETY INSTRUCTIONS

READ THESE SAFETY INSTRUCTIONS ENTIRELY!

IMPORTANT NOTICE !

Do not attempt to install this lift if you have never been trained on basic automotive lift installation procedures. Never attempt to lift components without proper lifting tools such as forklift or cranes stay clear of any moving parts that can fall and cause injury.

1. **READ ALL INSTRUCTIONS.**
2. **READ AND UNDERSTAND** all safety warning procedures before operating lift.
3. **KEEP AREA WELL LIT.**
4. **WARNING! RISK OF EXPLOSION.** This equipment has internal arcing or sparking parts which should not be exposed to flammable vapors. This machine should not be located in a recessed area or below floor level.
5. **KEEP CONTROL HANDLES AND / OR BUTTONS** dry, clean and free from grease and oil.
6. **CARE MUST BE TAKEN** as burns can occur from touching hot parts.
7. **DO NOT** operate equipment with a damaged power cord or if the equipment has been dropped or damaged until it has been examined by a qualified service person.
8. **DO NOT** let the power cord come in contact with hot manifolds or moving fan blades.
9. **IF AN EXTENSION CORD IS NECESSARY**, a cord with a current rating equal to or more than that of the equipment should be used. Cords rated for less current than the equipment may overheat. Care should be taken to arrange the cord so that it will not be tripped over or pulled.
10. **ALWAYS UNPLUG EQUIPMENT FROM ELECTRICAL OUTLET WHEN NOT IN USE.** Never use the power cord to pull the power plug from the outlet. Grasp the plug and pull to disconnect.
11. **LET EQUIPMENT COOL COMPLETELY BEFORE PUTTING AWAY.** Loop power cord loosely around equipment when storing.
12. **TO REDUCE THE RISK OF FIRE**, do not operate equipment in the vicinity of open containers of flammable liquids (i.e., gasoline).
13. **ADEQUATE VENTILATION SHOULD BE PROVIDED** when working on operating internal combustion engines.
14. **KEEP HAIR, LOOSE CLOTHING, FINGERS, AND ALL PARTS OF THE BODY AWAY FROM MOVING PARTS.**
15. **TO REDUCE THE RISK OF ELECTRIC SHOCK,** do not use on wet surfaces or expose to rain.
16. **USE ONLY AS DESCRIBED IN THIS MANUAL.** Use only manufacturer's recommended attachments.
17. **DO NOT** raise vehicle on the lift until installation is completed as instructed in this manual.
18. **KEEP HANDS AND FEET CLEAR.** Remove hands and feet from any moving parts. Keep feet clear of lift when lowering. Avoid pinch points.
19. **KEEP WORK AREA CLEAN.** Cluttered work areas invite injuries.
20. **CONSIDER WORK AREA ENVIRONMENT.** Do not expose equipment to rain. DO NOT use in damp or wet locations. Keep area well lit.

21. **ONLY TRAINED OPERATORS** should operate this lift. All non trained personnel should be kept away from work area. Never let non trained personnel come in contact with, or operate lift.

22. **USE LIFT CORRECTLY.** Use lift in the proper manner. Never use lifting adapters other than what is approved by the manufacturer.

23. **DO NOT** override self closing lift controls.

24. **REMAIN CLEAR** of lift when raising or lowering vehicle.

25. **CLEAR AREA** if vehicle is on danger of falling.

26. **ALWAYS ENSURE** that the safety locks are engaged before any attempt is made to work on or near vehicle.

27. **DRESS PROPERLY.** Non skid steel toe footwear is recommended when operating lift.

28. **GUARD AGAINST ELECTRIC SHOCK.** This lift must be grounded while in use to protect the operator from electric shock. Never connect the green power cord wire to a live terminal. This is for ground only.

29. **DANGER !** The power unit used on this lift contains high voltage. Disconnect power at the receptacle before performing any electrical repairs. Secure plug so that it cannot be accidentally plugged in during service.

30. **ALWAYS WEAR SAFETY GLASSES.** Everyday eyeglasses only have impact resistant lenses. They are not safey glasses.

31. **MAINTAIN WITH CARE.** Keep lift clean for better and safe performance. Follow manual for proper lubrication and maintenance instructions. Keep control handles and / or buttons dry, clean and free from grease and oil.

32. **STAY ALERT.** Follow instructions carefully. Be aware of dangers. Double check your work.

33. **CHECK FOR DAMAGED PARTS.** Check for alignment of moving parts, breakage of parts or any condition that may affect its operation. Do not use lift if any component is broken or damaged.

34. **NEVER** remove safety related components from the lift. Do not use lift if safety related components are damaged or missing.

35. **NOTE:** If attachments, accessories, or configuration modifying components that are located in the load path, affect operation of the lift, affect the lift electrical listing or affect intended vehicle accommodation are used on this lift and, if they are not certified for use on this lift, then the certification of this lift shall become null and void. Contact Dannmar Equipment for information pertaining to certified attachments, accessories, or configuration modifying components.

SAVE THESE INSTRUCTIONS

OWNER / EMPLOYER RESPONSIBILITIES

- Shall ensure that lift operators are qualified and that they are trained in the safe use and operation of the lift using the manufacturer's operating instructions; ALI/SM10-1, ALI Lifting it Right safety manual; ALI/ST-10 ALI Safety Tips card; ANSI/ALI ALOIM-2008, American National Standard for Automotive Lifts Safety Requirements for Operation, Inspection and Maintenance; ALI/WL Series, ALI Uniform Warning Label Decals/Placards; and in the case of frame engaging lifts, ALI/LP-GUIDE, Vehicle Lifting Points/Quick Reference Guide for Frame Engaging Lifts.

- Shall establish procedures to periodically inspect the lift in accordance with the lift manufacturer's instructions or ANSI/ALI ALOIM-2008, American National Standard for Automotive Lifts Safety Requirements for Operation, Inspection and Maintenance; and The Employer Shall ensure that lift inspectors are qualified and that they are adequately trained in the inspection of the lift.

- Shall establish procedures to periodically maintain the lift in accordance with the lift manufacturer's instructions or ANSI/ALI ALOIM-2008, American National Standard for Automotive Lifts Safety Requirements for Operation, Inspection and Maintenance; and The Employer Shall ensure that lift maintenance personnel are qualified and that they are adequately trained in the maintenance of the lift.

- Shall maintain the periodic inspection and maintenance records recommended by the manufacturer or ANSI/ALI ALOIM-2008, American National Standard for Automotive Lifts Safety Requirements for Operation, Inspection and Maintenance.

- Shall display the lift manufacturer's operating instructions; ALI/SM10-1, ALI Lifting it Right safety manual; ALI/ST-10 ALI Safety Tips card; ANSI/ALI ALOIM-2008, American National Standard for Automotive Lifts Safety Requirements for Operation, Inspection and Maintenance; and in the case of frame engaging lifts, ALI/LP-GUIDE, Vehicle Lifting Points/Quick Reference Guide for Frame Engaging Lifts; in a conspicuous location in the lift area convenient to the operator.

- Shall not modify the lift in any manner without the prior written consent of the manufacturer.

- Shall provide necessary lockout / tagout means for energy sources per ANSI Z244.1-1982 (R1993), safety requirements for the lockout / tagout of energy sources, before beginning any lift repairs.

INSTALLER / OPERATOR PLEASE READ AND FULLY UNDERSTAND. BY PROCEEDING YOU AGREE TO THE FOLLOWING.

- I have visually inspected the site where the lift is to be installed and verified the concrete to be in good condition and free of cracks or other defects. I understand that installing a lift on cracked or defective concrete could cause lift failure resulting in personal injury or death.

- I understand that a level floor is required for proper installation and level lifting.

- I understand that I am responsible if my floor is of questionable slope and that I will be responsible for all charges related to pouring a new level concrete slab if required and any charges.

- I understand that Dannmar lifts are supplied with concrete fasteners meeting the criteria of the American National Standard "Automotive Lifts Safety Requirements for Construction, Testing, and Validation" ANSI/ALI

- ALCTV-2011, and that I will be responsible for all charges related to any special regional structural and/or seismic anchoring requirements specified by any other agencies and / or codes such as the Uniform Building Code (UBC) and / or International Building Code (IBC).

- I will assume full responsibility for the concrete floor and condition thereof, now or later, where the above equipment model(s) are to be installed. Failure to follow danger, warning, and caution instructions may lead to serious personal injury or death to operator or bystander or damage to property.
- I understand that Dannmar lifts are designed to be installed in indoor locations only. Failure to follow installation instructions may lead to serious personal injury or death to operator or bystander or damage to property or lift.

INSTALLER / OPERATOR PROTECTIVE EQUIPMENT

Personal protective equipment helps makes installation and operation safer, however, it does not take the place of safe operating practices. Always wear durable work clothing during any installation and / or service activity. Shop aprons or shop coats may also be worn, however loose fitting clothing should be avoided. Tight fitting leather gloves are recommended to protect technician hands when handling parts. Sturdy leather work shoes with steel toes and oil resistant soles should be used by all service personnel to help prevent injury during typical installation and operation activities. Eye protection is essential during installation and operation activities. Safety glasses with side shields, goggles, or face shields are acceptable. Back belts provide support during lifting activities and are also helpful in providing worker protection. Consideration should also be given to the use of hearing protection if service activity is performed in an enclosed area, or if noise levels are high.

D-10/AC PARTS LIST

ITEM #	PART NUMBER	DESCRIPTION	QTY.
1	17101001	POWER SIDE POST ASSEMBLY	1
2	17101003	OFF SIDE POST ASSEMBLY	1
3	17102001	D-10 CARRIAGE ASSEMBLY	2
4	17107003	POWER SIDE SAFETY WELDMENT	1
5	17107004	OFF SIDE SAFETY WELDMENT	1
6	17204003	SAFETY CLEVIS PIN	2
7	17250001	Ø2.0 x 69 CYLINDER ASSEMBLY	2
8	17203002	2.5mm SAFETY SPRING	2
9	17108034	POWERSIDE SAFETY COVER	1
10	17108035	OFFSIDE SAFETY COVER	1
11	17108036	SAFETY SHEAVE	2
12	17300001	AB-1468 POWER UNIT	1
13	17206001	90DEG. ELBOW WITH O-RING SEAL 6801-06-06-NWO	1
14	17206002	BULKHEAD BRANCH TEE 2703-04-04-06	1
15	17206003	MALE 90DEG. ELBOW X LONG 2501-LL-04-04	2
16	17200003	M8 x 40 HEX HEAD BOLT	4
17	17200004	M10 x 30 HEX HEAD BOLT	4
18	17200005	M8 x 25 HEX HEAD BOLT	4
19	17202002	M8 LOCK WASHER	4
20	17202003	M10 LOCK WASHER	4
21	17201001	HEX NUT M8 x 1.25	8
22	17201002	M10 x 1.5 HEX NUT	4
23	17201003	9/16-18” JAM NUT	1
24	17204002	Ø3.2 HAIRPIN COTTER	2
25	17107005	LIFT HEAD PIN WELDMENT	4
26	17107006	SLIP ON LIFT PAD ASSEMBLY	4
27	17108041	SHORT LIFT PAD EXTENSION	4
28	17108042	LONG LIFT PAD EXTENSION	4
29	17106001	D-10 POWER UNIT HYDRAULIC HOSE ASSEMBLY	1
30	17106002	D-10 HYRAULIC HOSE ASSEMBLY 2299mm	1
31	17106003	D-10AC HYDRAULIC CROSSOVER HOSE ASSEMBLY	1
32	17108044	SAFETY CABLE 7166mm LG	1
33	17207007	SAFETY CABLE CRIMP	1
34	17201004	HEX NUT M12 X 1.25	2
35	17202005	M12 FLAT WASHER	2
36	17201005	M18 NYLON LOCK NUT	2
37	17202006	M18 FLAT WASHER	2
38	17104001	D-10AC TOP TROUGH ASSEMBLY	1
39	17103001	D-10AC SHORT ARM ASSEMBLY	2
40	17103002	D-10AC / ACX LONG ARM ASSEMBLY	2
41	17105002	D-10AC CABLE ASSY Ø10mm x 8794	1
42	17105001	D-10AC CABLE ASSY Ø10mm x 8870	1
43	17207009	PLASTIC COVER BLOCK	2
44	17207015	POWER UNIT VIBRATION DAMPENER	1

D-10/AC ASSEMBLY DIAGRAM

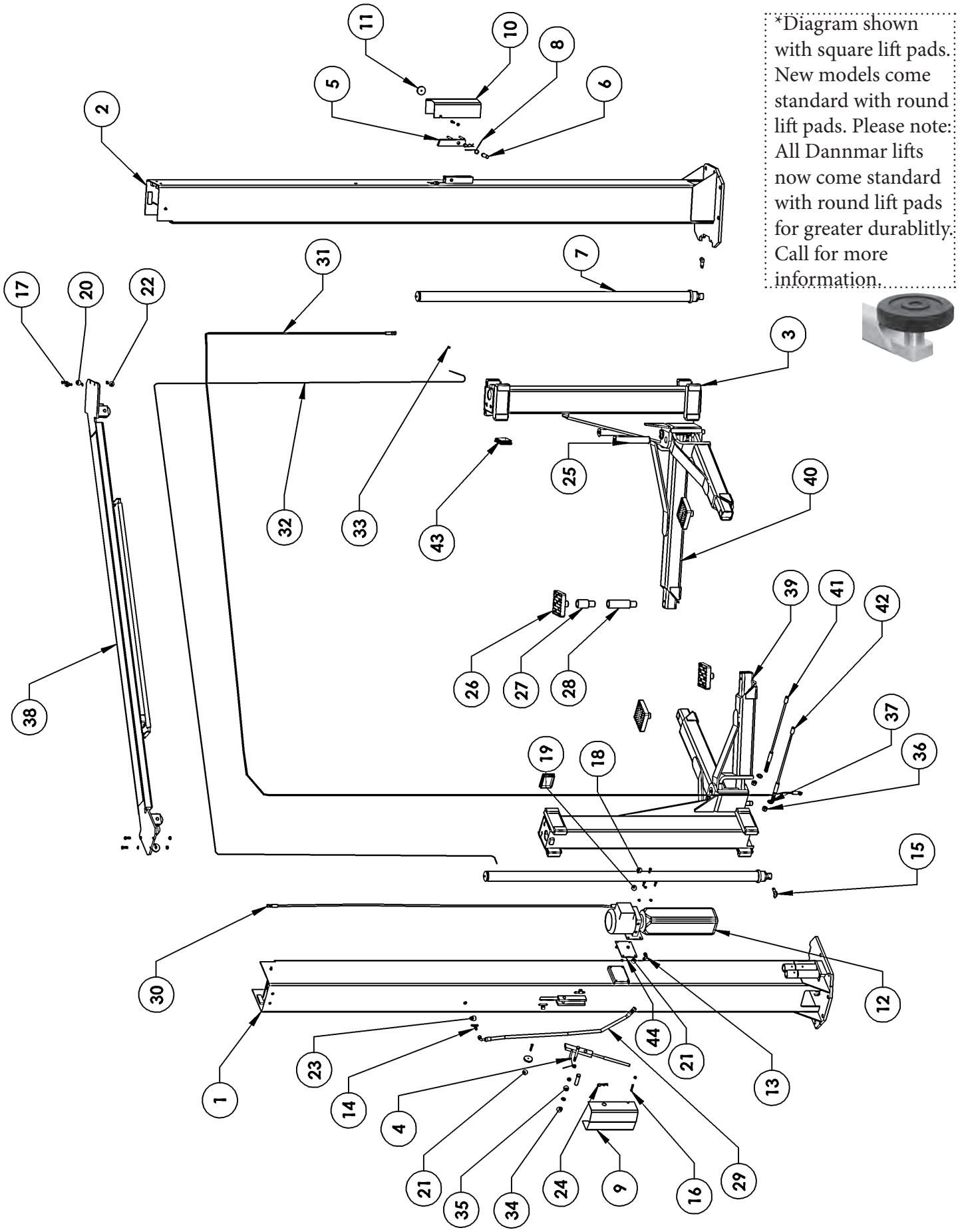

D-10/ACX PARTS LIST

ITEM #	PART NUMBER	DESCRIPTION	QTY.
1	17101001	POWER SIDE POST ASSEMBLY	1
2	17101003	OFF SIDE POST ASSEMBLY	1
3	17104006	D-10ACX TOP TROUGH ASSEMBLY	1
4	17102001	D-10 CARRIAGE ASSEMBLY	2
5	17107003	POWER SIDE SAFETY WELDMENT	1
6	17107004	OFF SIDE SAFETY WELDMENT	1
7	17204003	SAFETY CLEVIS PIN	2
8	17250001	Ø2.0 x 69 CYLINDER ASSEMBLY	2
9	17203002	2.5mm SAFETY SPRING	2
10	17108034	POWERSIDE SAFETY COVER	1
11	17108035	OFFSIDE SAFETY COVER	1
12	17108036	SAFETY SHEAVE	2
13	17300001	AB-1468 POWER UNIT	1
14	17206001	90DEG. ELBOW WITH O-RING SEAL 6801-06-06-NWO	1
15	17206002	BULKHEAD BRANCH TEE 2703-04-04-06	1
16	17206003	MALE 90~ ELBOW X LONG 2501-LL-04-04	2
17	17200003	M8 x 40 HEX HEAD BOLT	4
18	17200004	M10 x 30 HEX HEAD BOLT	4
19	17200005	M8 x 25 HEX HEAD BOLT	4
20	17202002	M8 LOCK WASHER	4
21	17202003	M10 LOCK WASHER	4
22	17201001	HEX NUT M8 x 1.25	8
23	17201002	M10 x 1.5 HEX NUT	4
24	17201003	9/16-18” JAM NUT	1
25	17204002	Ø3.2 HAIRPIN COTTER	2
26	17207007	SAFETY CABLE CRIMP	1
27	17201004	HEX NUT M12 X 1.25	2
28	17202005	M12 FLAT WASHER	2
29	17201005	M18 NYLON LOCK NUT	2
30	17202006	M18 FLAT WASHER	2
31	17103002	D-10AC / ACX LONG ARM ASSEMBLY	2
32	17103007	D-10ACX SHORT ARM ASSEMBLY	2
33	17107005	LIFT HEAD PIN WELDMENT	4
34	17107006	SLIP ON LIFT PAD ASSEMBLY	4
35	17108041	SHORT LIFT PAD EXTENSION	4
36	17108042	LONG LIFT PAD EXTENSION	4
37	17106001	D-10 POWER UNIT HYDRAULIC HOSE ASSEMBLY	1
38	17106002	D-10 HYRAULIC HOSE ASSEMBLY 2299mm	1
39	17106004	D-10CX / ACX HYDRAULIC CROSSOVER HOSE ASSEMBLY	1
40	17108085	SAFETY CABLE 7700mm LG	1
41	17105004	D-10CX / ACX CABLE ASSEMBLY Ø10mm x 9220mm	1
42	17105003	D-10ACX CABLE ASSEMBLY n10mm x 9142mm LG	1
43	17207009	PLASTIC COVER BLOCK	2
44	17207015	POWER UNIT VIBRATION DAMPENER	1

D-10/ACX ASSEMBLY DIAGRAM

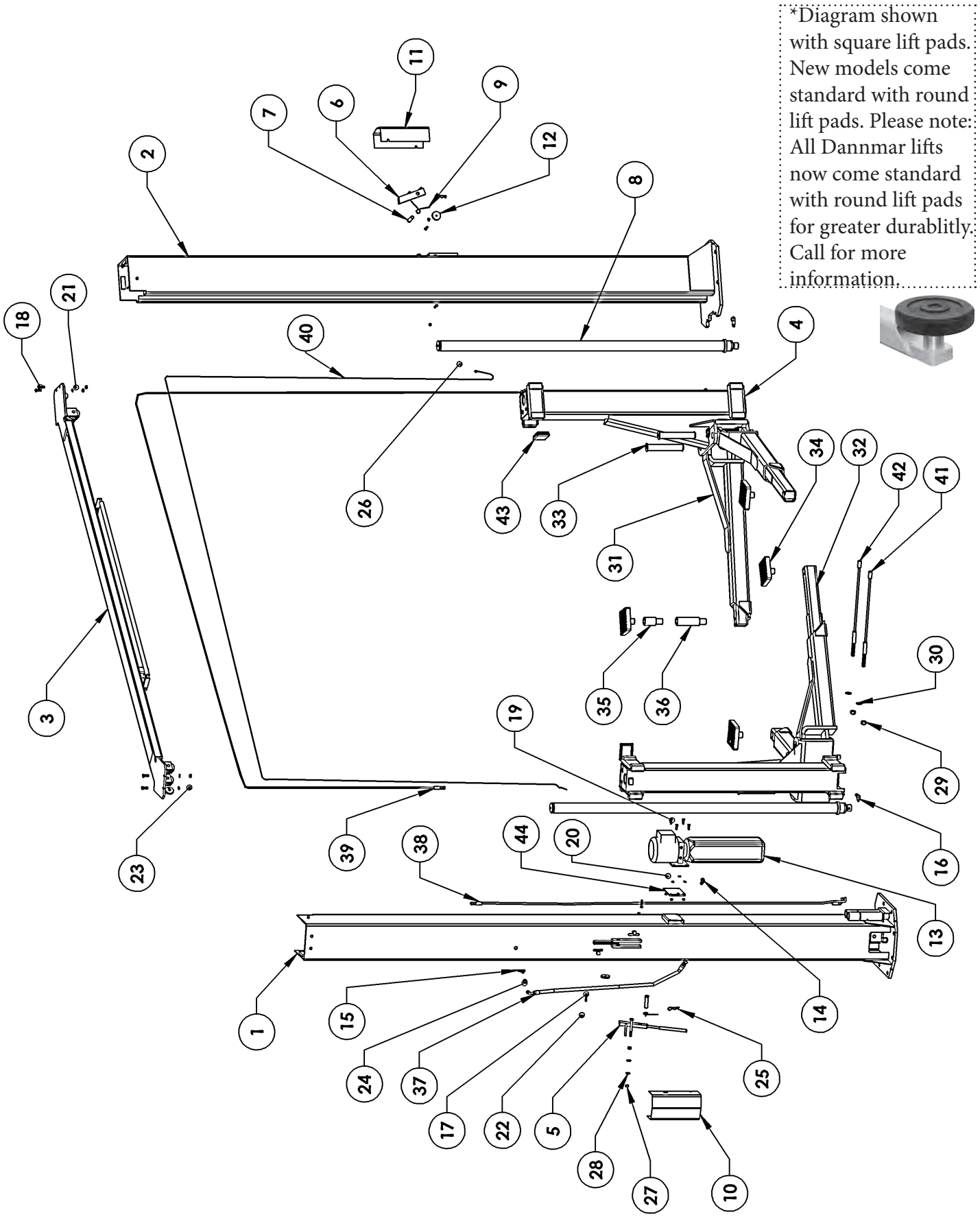

D-10/CX PARTS LIST

ITEM #	PART NUMBER	DESCRIPTION	QTY.
1	17101001	POWER SIDE POST ASSEMBLY	1
2	17101003	OFF SIDE POST ASSEMBLY	1
3	17104007	D-10CX TOP TROUGH ASSEMBLY	1
4	17102001	D-10 CARRIAGE ASSEMBLY	2
5	17107003	POWER SIDE SAFETY WELDMENT	1
6	17107004	OFF SIDE SAFETY WELDMENT	1
7	17204003	SAFETY CLEVIS PIN	2
8	17250001	Ø2.0 x 69 CYLINDER ASSEMBLY	2
9	17203002	2.5mm SAFETY SPRING	2
10	17108034	POWERSIDE SAFETY COVER	1
11	17108035	OFFSIDE SAFETY COVER	1
12	17108036	SAFETY SHEAVE	2
13	17300001	AB-1468 POWER UNIT	1
14	17206001	90DEG. ELBOW WITH O-RING SEAL 6801-06-06-NWO	1
15	17206002	BULKHEAD BRANCH TEE 2703-04-04-06	1
16	17206003	MALE 90DEG. ELBOW X LONG 2501-LL-04-04	2
17	17200003	M8 x 40 HEX HEAD BOLT	4
18	17200004	M10 x 30 HEX HEAD BOLT	4
19	17200005	M8 x 25 HEX HEAD BOLT	4
20	17202002	M8 LOCK WASHER	4
21	17202003	M10 LOCK WASHER	4
22	17201001	HEX NUT M8 x 1.25	8
23	17201002	M10 x 1.5 HEX NUT	4
24	17201003	9/16-18” JAM NUT	1
25	17204002	Ø3.2 HAIRPIN COTTER	2
26	17103010	D-10CX MEDIUM ARM ASSEMBLY	4
27	17107005	LIFT HEAD PIN WELDMENT	4
28	17107006	SLIP ON LIFT PAD ASSEMBLY	4
29	17108041	SHORT LIFT PAD EXTENSION	4
30	17108042	LONG LIFT PAD EXTENSION	4
31	17106001	D-10 POWER UNIT HYDRAULIC HOSE ASSEMBLY	1
32	17106002	D-10 HYRAULIC HOSE ASSEMBLY 2299mm	1
33	17106004	D-10CX / ACX HYDRAULIC CROSSOVER HOSE ASSEMBLY	1
34	17105004	D-10CX / ACX CABLE ASSEMBLY Ø10mm x 9220mm	2
35	17108085	SAFETY CABLE 7700mm LG	1
36	17207007	SAFETY CABLE CRIMP	1
37	17201004	HEX NUT M12 X 1.25	2
38	17202005	M12 FLAT WASHER	2
39	17201005	M18 NYLON LOCK NUT	2
40	17202006	M18 FLAT WASHER	2
41	17207009	PLASTIC COVER BLOCK	2
42	17207015	POWER UNIT VIBRATION DAMPENER	1

D-10/CX ASSEMBLY DIAGRAM

*Diagram shown with square lift pads. New models come standard with round lift pads. Please note: All Dannmar lifts now come standard with round lift pads for greater durablitly. Call for more information.

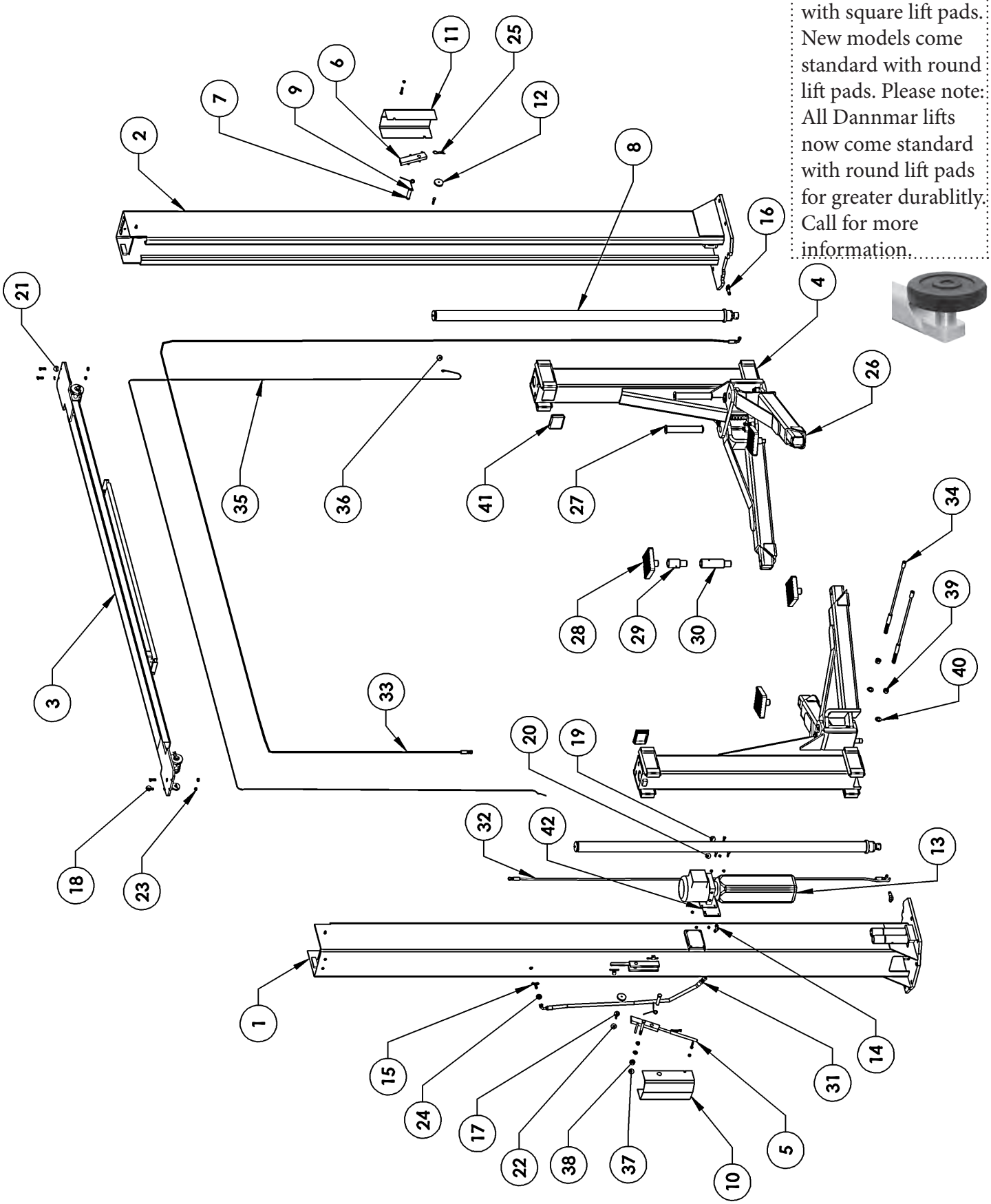

INSTALLATION INSTRUCTIONS

TOOLS REQUIRED

- ☐ Rotary Hammer Drill Or Similar (If Anchoring)
- ☐ 3/4” Masonry Bit (If Anchoring)
- ☐ Hammer
- ☐ 4 Foot Level
- ☐ Open End Wrench Set: Metric
- ☐ Socket And Ratchet Set: Metric
- ☐ Hex Key / Metric Allen Wrench Set
- ☐ Large Crescent Wrench
- ☐ Large Pipe Wrench
- ☐ Crow Bar
- ☐ Chalk Line
- ☐ Medium Flat Screwdriver
- ☐ Tape Measure : 25 Foot Minimum
- ☐ Needle Nose Pliers

IMPORTANT NOTICE!

These instructions must be followed to ensure proper installation and operation of your lift. Failure to comply with these instructions can result in serious bodily harm and void product warranty. Manufacturer will assume no liability for loss or damage of any kind, expressed or implied resulting from improper installation or use of this product.

STEP 1
(Selecting Site)

BEFORE INSTALLING YOUR NEW LIFT, CHECK THE FOLLOWING:

1. **LIFT LOCATION:** Always use architects plans when available. Check layout dimension against floor plan requirements making sure that adequate space is available.
2. **OVERHEAD OBSTRUCTIONS:** The area where the lift will be located should be free of overhead obstructions such as heaters, building supports, electrical lines etc.
3. **DEFECTIVE FLOOR:** Visually inspect the site where the lift is to be installed and check for cracked or defective concrete.

⚠ CAUTION

4. **OPERATING TEMPERATURE.** Operate lift only between temperatures of 41° -104° F.
5. Lift is designed for **INDOOR INSTALLATION ONLY.**

STEP 2
(Floor Requirements)

This lift must be installed on a solid level concrete floor with no more than 3 degrees of slope. Failure to do so could cause personal injury or death.

⚠ DANGER

DO NOT install this lift on any asphalt surface or any surface other than concrete.

DO NOT install this lift on expansion seams or on cracked or defective concrete.

DO NOT install this lift on a second / elevated floor without first consulting building architect.

DO NOT install this lift outdoors.

CONCRETE SPECIFICATIONS

10,000-lb 2-Post Lift Models Require 4-inch Min. Thickness / 3,000 PSI Steel Reinforced.

IMPORTANT NOTE:

All models **MUST** be installed on 3,000 PSI concrete only conforming to the minimum requirements shown above. New concrete must be adequately cured by at least 28 days minimum. Dannmar lifts are supplied with installation instructions and concrete fasteners meeting the criteria as prescribed by the american national standard "automotive lifts safety requirements for construction, testing, and validation" ANSI/ALI ALCTV-2006. Lift buyers are responsible for any special regional structural and / or seismic anchoring requirements specified by any other agencies and / or codes such as the uniform building code (ubc) and / or international building code (ibc).

STEP 3
(Column Preparation)

COMPLETE THE FOLLOWING PRIOR STANDING UP COLUMNS.

1. Slide carriage up column to aid in pulley removal and equalizer cable routing. (See figure 1)
2. Remove equalizer cable pulley. Route the plug end of each equalizer cable around the bottom pulley and lock into bottom plate of carriage. (See figure 2) Note: On symmetrical models both cables are same length. On asymmetric models the cables are two different length's. The shorter cable on the asymmetric models will be pre routed on the powerside post and the longer cable will be pre routed on the offside post.
3. Feed threaded end of cable up through carriage. Leave excess cable resting on top of carriage until further steps are required. (See figure 3)
4. Install the cylinder fittings in cylinder ports. Pay attention when installing the cylinders in step three to ensure that each fitting points towards the entrance side of lift.

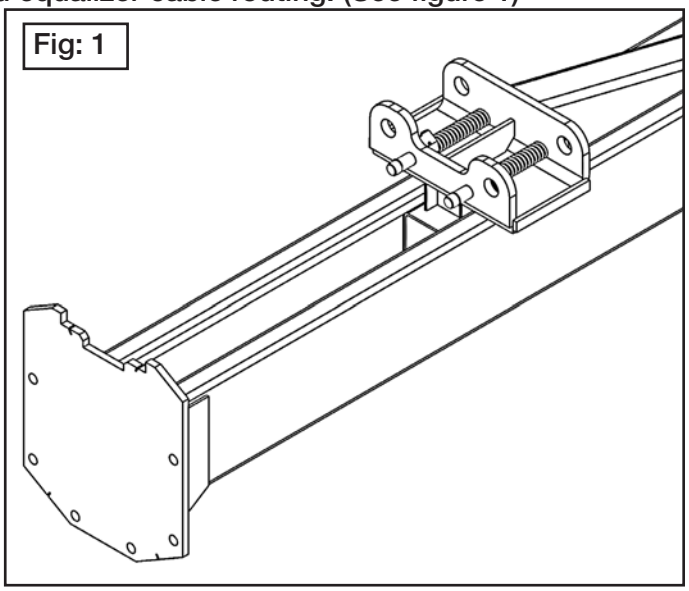

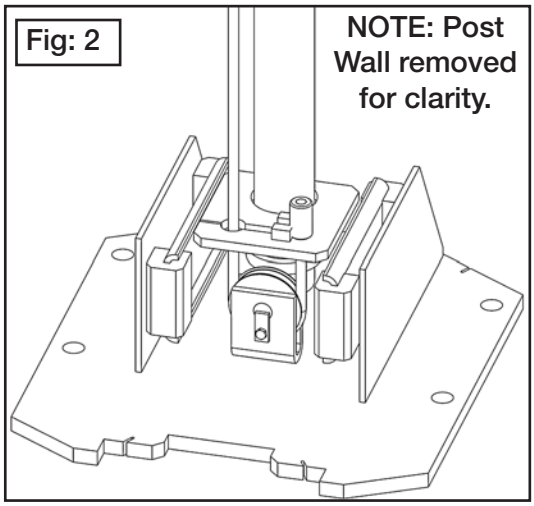

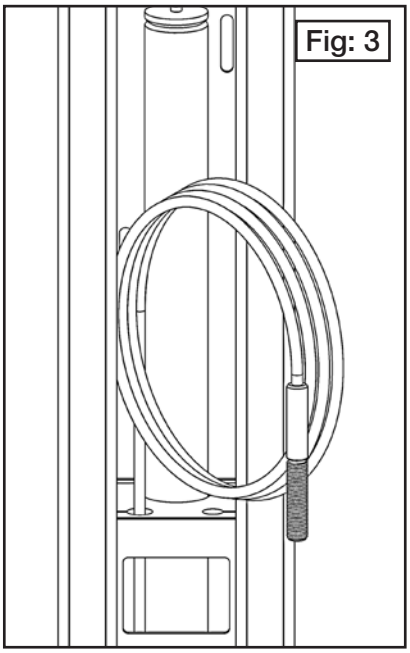

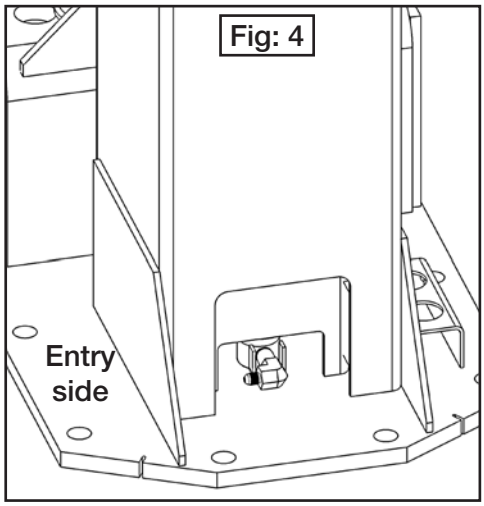

STEP 4
(Site Layout)

1. Determine which side will be the approach side.
2. Now determine where the power unit will be located. The POWERSIDE column has the power unit mounting bracket attached to the side. Please note, on the Asymmetric model lifts the POWERSIDE column will always be located on the passenger side of the vehicle.
3. Once a location is determined, use a carpenters chalk line to layout a grid for the post locations. Keep all dimensions and squareness within 1/8" or malfunctioning of the lift can occur.
4. After the post locations are properly marked, use a chalk or crayon to make an outline of the posts on the floor at each location using the post base plates as a template.
5. Double check all dimensions and make sure that the layout is perfectly square.

MODEL	A	B	RECOMMENDED BAY DIMENSIONS
D-10/CX	145"	17"	16' wide x 24' deep x 12'6" tall
D-10/AC	130.5"	22"	15' wide x 24' deep x 12'6" tall
D-10/ACX	143.5"	22"	16' wide x 24' deep x 12'6" tall

Use the edge of the base plates to line up the posts on the CX models.

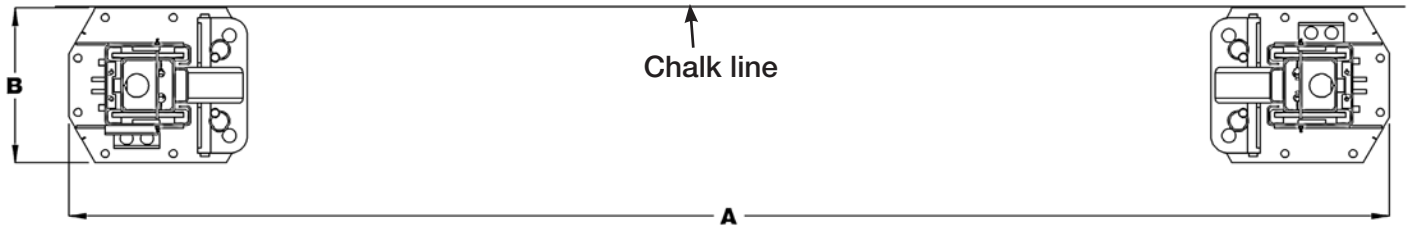

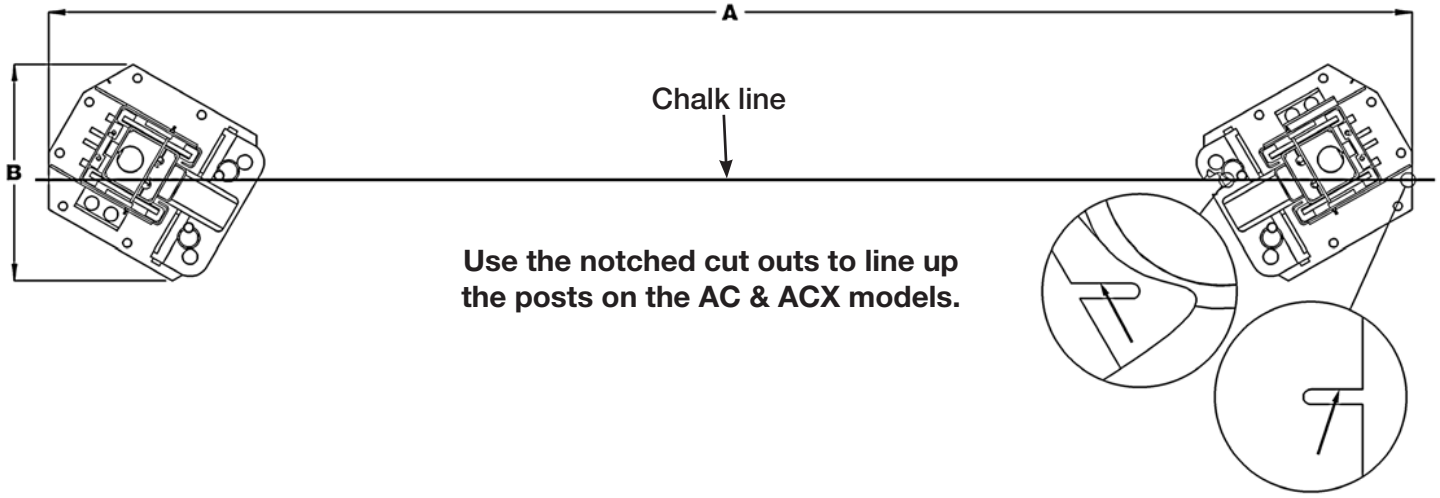

Use the notched cut outs to line up the posts on the AC & ACX models.

STEP 5
(Install Powerside Column)

1. Before proceeding, double check measurements and make certain that the bases of each column are square and aligned with the chalk line.

2. Using the base plate on the column as a guide, drill each anchor hole in the concrete approximately 4-1/2" deep using a rotary hammer drill and 3/4" concrete drill. To assure full holding power, do not ream the hole or allow drill to wobble. (See figure 5)

3. After drilling, remove dust thoroughly from each hole using compressed air and/or wire brush. Make certain that the column remains aligned with the chalk line during this process.

4. Assemble the washers and nuts on the anchors then tap into each hole with a hammer until the washer rests against the base plate. Be sure that if shimming is required that enough threads are left exposed. (See figure 6)

5. If shimming is required, insert the shims as necessary under the base plate so that when the anchor bolts are tightened, the columns will be plumb. (See figure 7)

6. With the shims and anchor bolts in place, tighten by securing the nut to the base then turning 2-3 full turns clockwise. DO NOT use an impact wrench for this procedure.

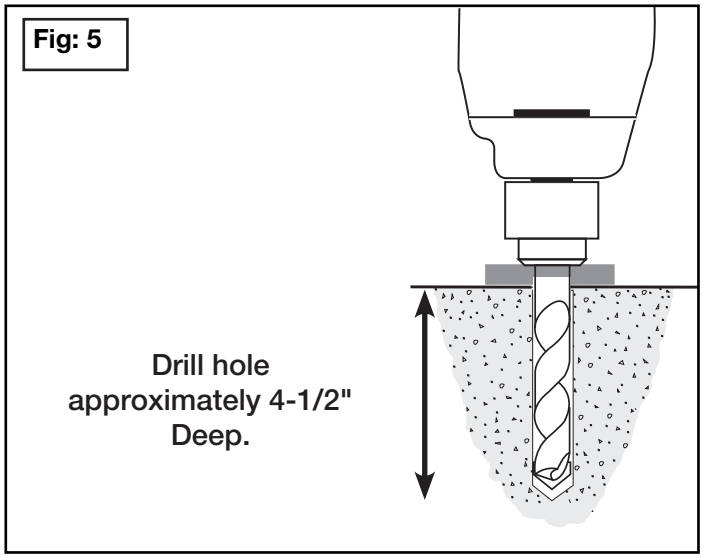

NOTE:
To ease installation of the top trough, it helps to keep the anchor bolts loose on one of the columns until the top trough is mounted.

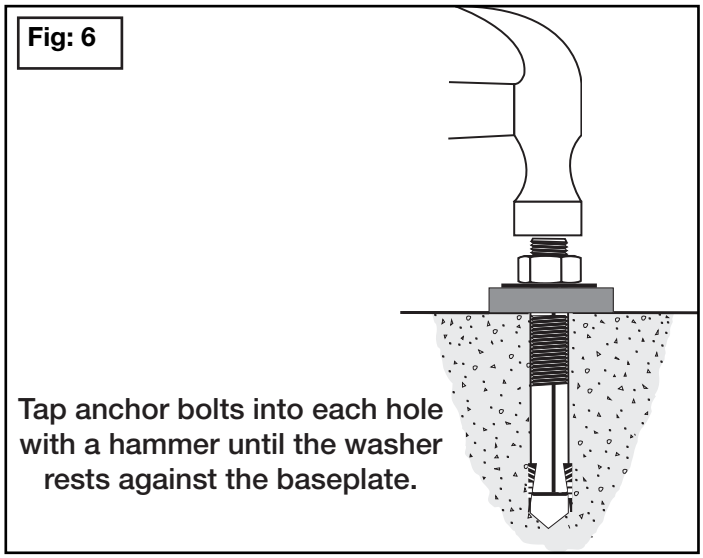

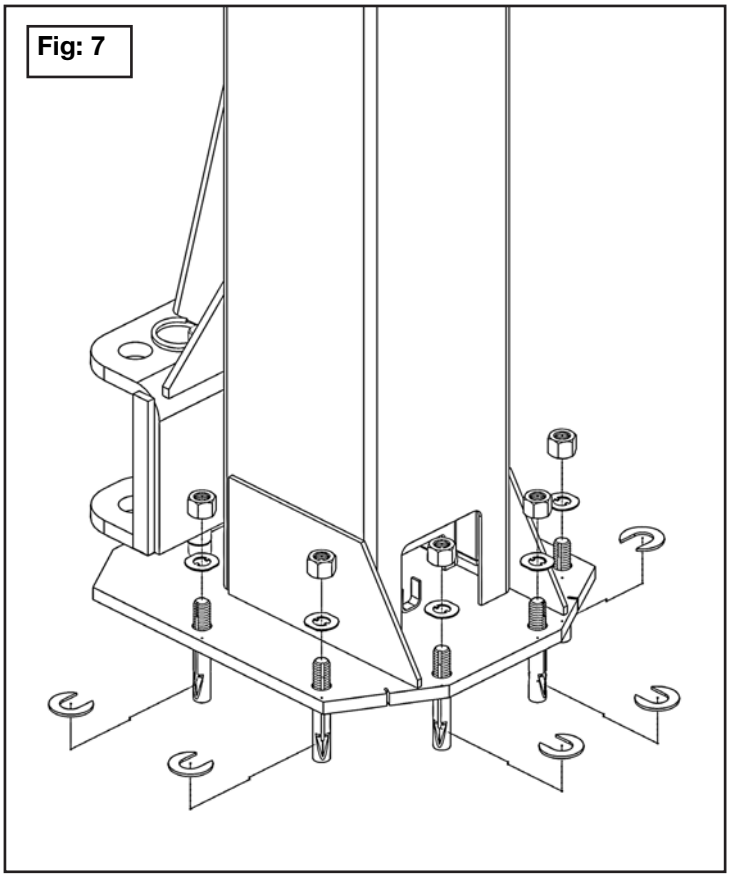

STEP 6
(Mounting The Offside Column)

1. Position the offside column at the designated chalk locations and secure to the floor following the same procedures as outlined in STEP FIVE; Items 1-6.

STEP 7
(Mounting the Top Trough Assembly)

1. Remove all of the equalizer pulleys from the top trough assembly in preparation of installing it to the top of the columns.

2. Using a lifting device, raise the top trough assembly into position on top of the columns. Bolt to the columns using the 10 mm hex bolts, nuts and washers.

3. **YOU MUST POSITION THE SWITCH ENCLOSURE ADJACENT TO THE POWERSIDE COLUMN.** (See figure 8)

NOTE: In order to route the equalizer cables the pulleys must be removed.

WARNING

If the anchor bolts were loosened to aid on the installation of the top trough, tighten anchor bolts as indicated in step 5 items 4 - 6.

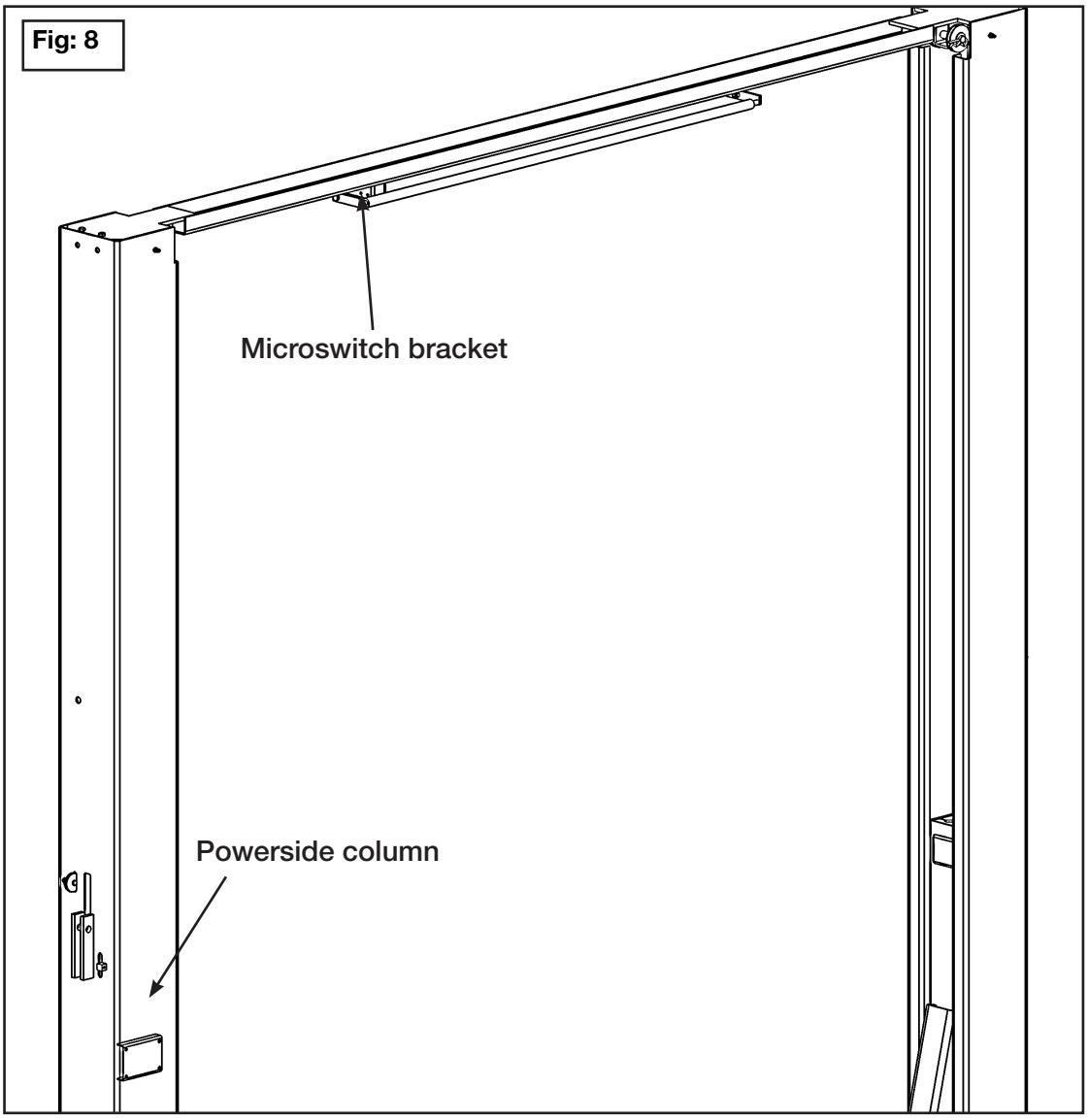

WARNING

You **MUST** reinstall the top carriage stop bolt (shown below) after the top trough is installed and secured. Tighten the carriage stop bolt to 2-3 ft lb of torque upon final installation inspection. These instruc-tions must be followed to insure proper installation and operation of your lift. Failure to comply with these instructions can result in serious bodily injury and or death and or void product warranty. Manufacturer will assume no liability for loss or damage of any kind, expressed or implied resulting from improper installa-tion or use of this product.

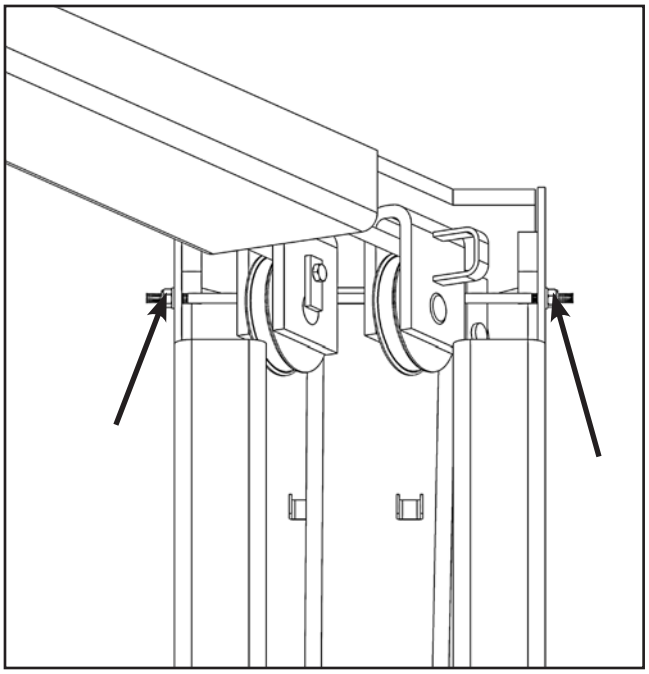

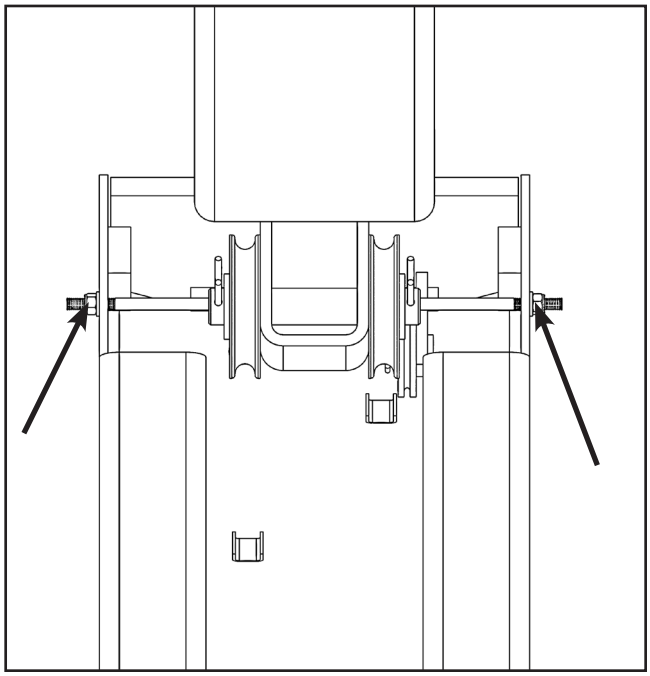

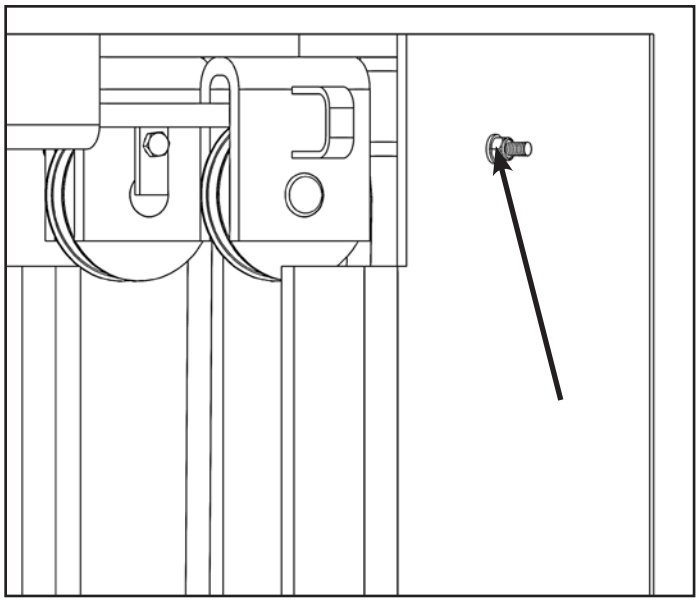

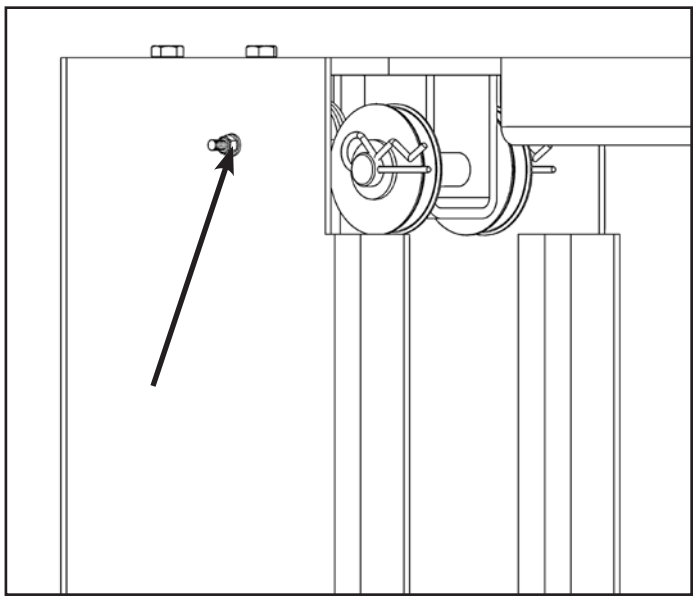

STEP 8
(Mounting the Power Unit)

1. Attach the power unit and vibration pad to the powerside column using four M8 x 25mm hex bolts and nylock nuts supplied. (See figure 9)

2. Fill the reservoir with 12 quarts of Aw-32 hydraulic oil or Dexron III or VI transmission fluid. Be sure to use a clean funnel.

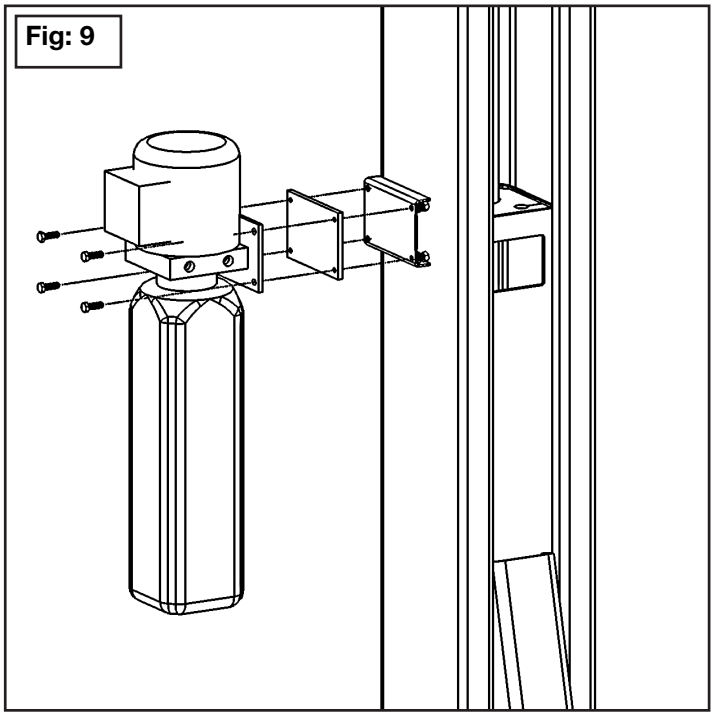

Step 9
(Installing the Safety System)

1. Install safety weldments into each respective column. (See figure 10 & 11)

2. From the offside column insert the non looped end of the safety cable through the slot located to the right of the offside safety weldment and route under the pulley and take it up to the top trough. (See figure 12 on next page)

3. Route the cable through the top trough safety cable pulley(s) and across the lift. (See figure 13 & 14 on next page)

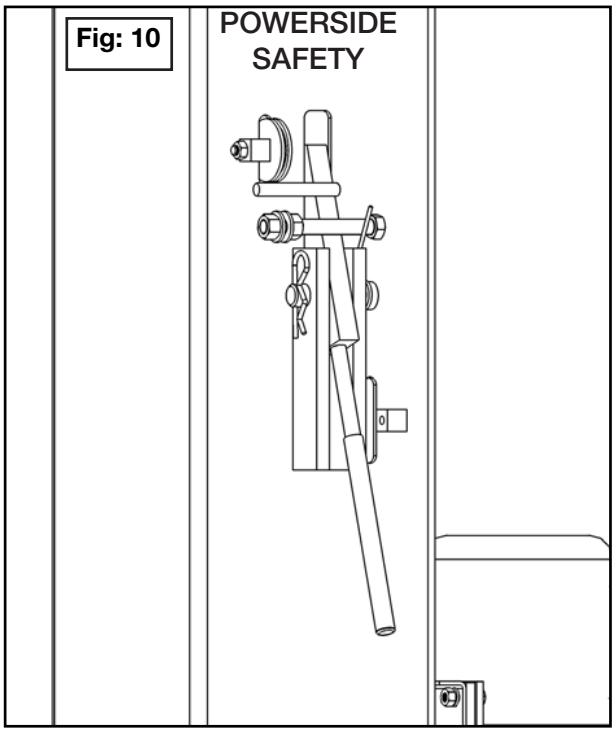

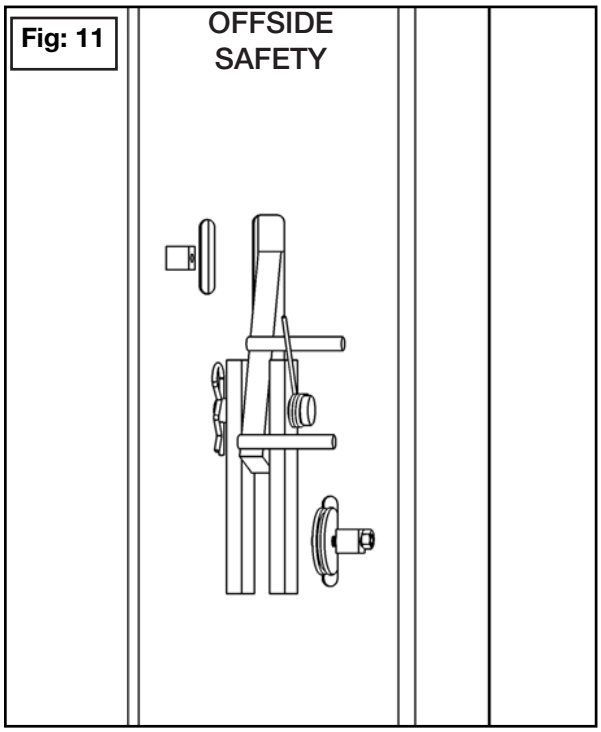

4. Route the cable the same way on the powerside going back down the column.

5. Route the cable over the top pin on the safety handle. Insert the cable end through the hole on the threaded post. (See figure 15 on next page)

6. Pull the slack out the safety cable and hold tension as the cable is being tightened. Tighten jam nuts on either side of the cable to secure it into place. This will need to be repeated monthly as the cable stretches.

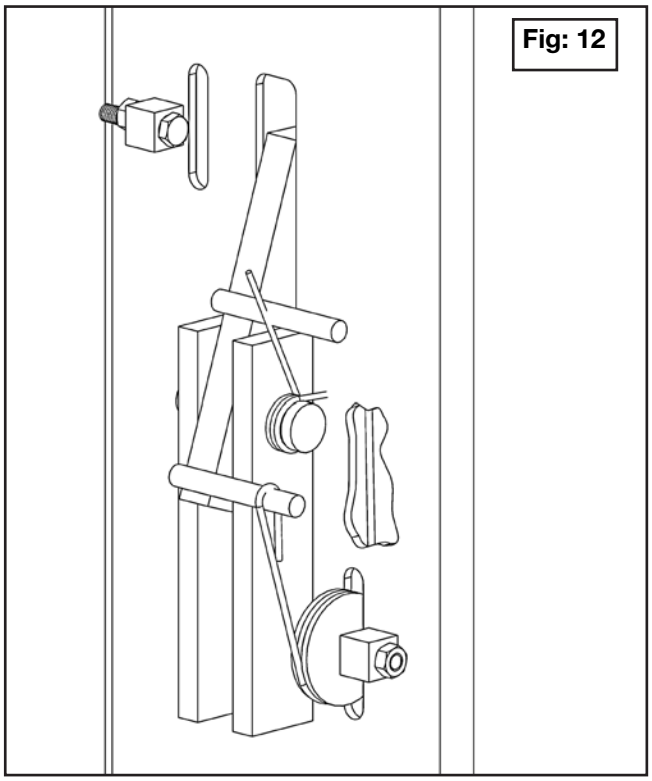

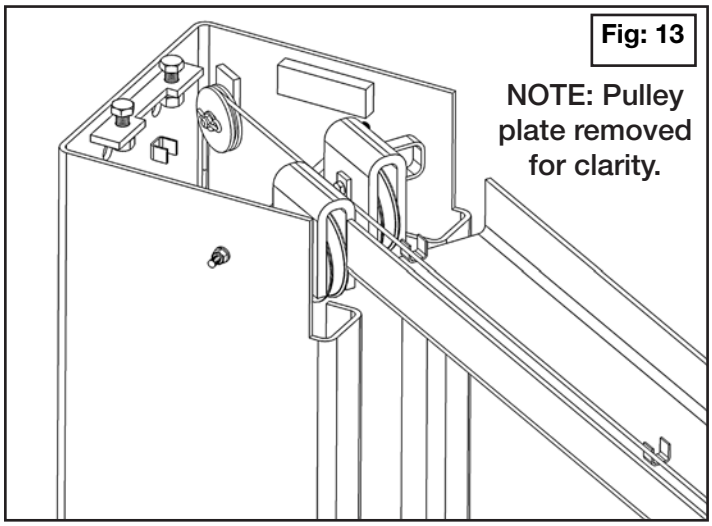

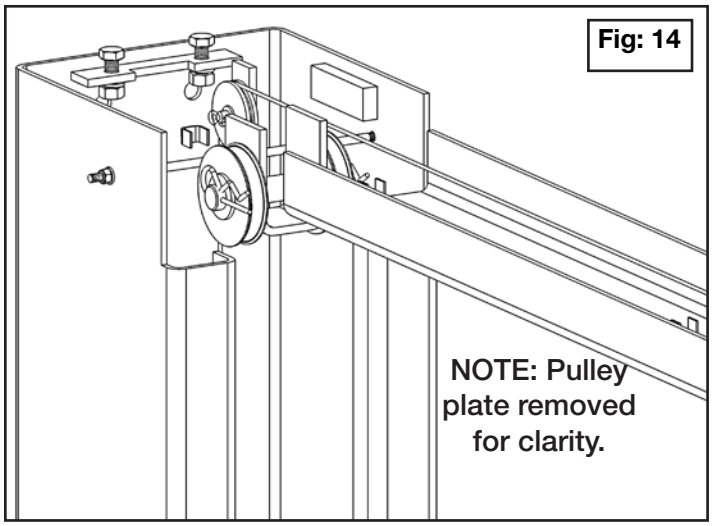

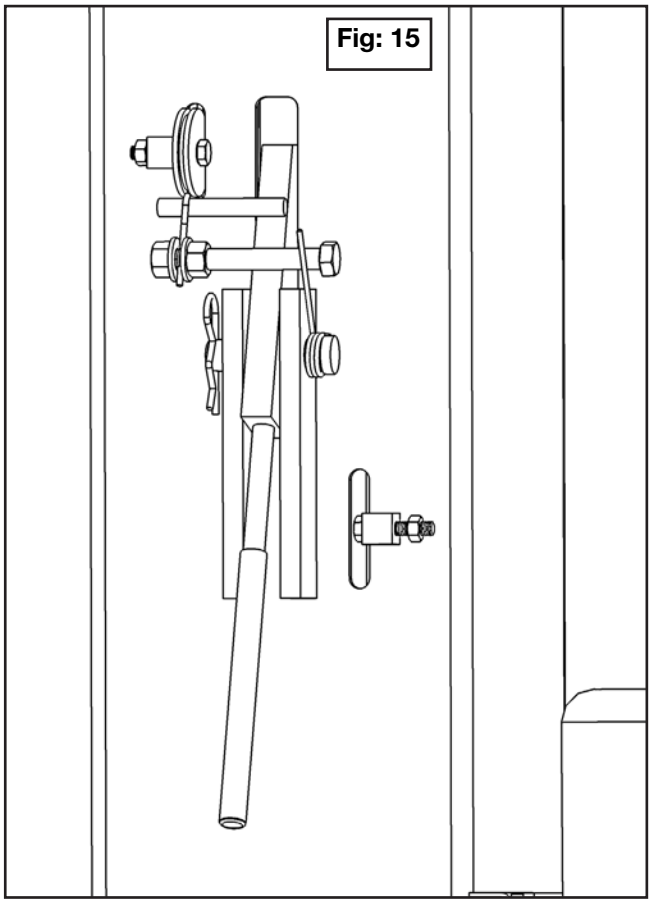

NOTE: Make sure to tighten both nuts equally so as to keep the safety cable centered.

DANGER

ENSURE THAT BOTH THE POWERSIDE & OFFSIDE SAFETIES ENGAGE PROPERLY PRIOR TO LIFT OPERATION.

STEP 10
(Installing Hydraulic Lines)

1. Install the bulkhead tee fitting into the powerside column. The through hole is located approximately 90 inches from the floor on the back wall of the powerside column.

2. Connect the powerside cylinder hose to the tee fitting, be sure to route the hose through the retainer rings inside the columns.

3. Route the offside cylinder hose (crossover hose) up through the column and across the top trough, down the column and connect it to the bulkhead tee fitting. (See figure 16)

WARNING

When routing the hydraulic hose through the columns, make sure to route through the retaining rings

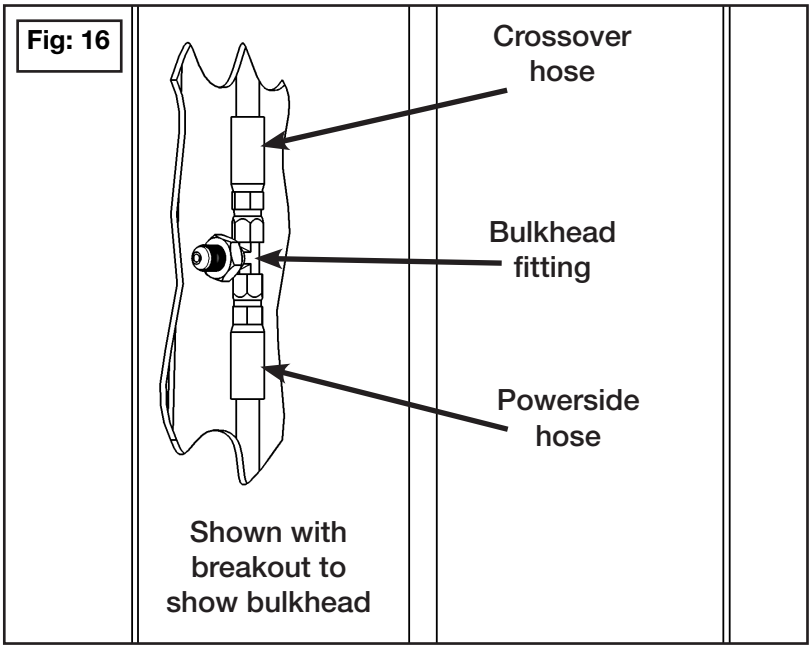

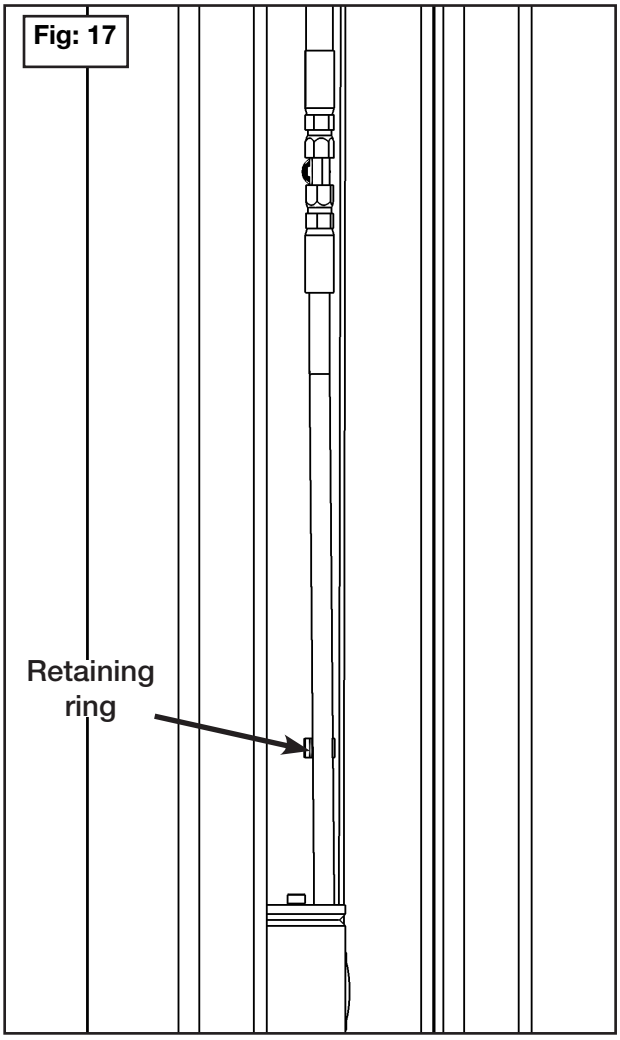

welded inside each column. Make sure that the hose is clear of any moving parts. It may be necessary to tie the hose clear by using nylon tie straps or wire. (See figure 17)

STEP 11
(Routing the Equalizer Cables)

Refer to the illustration on page 22

1. Raise and lock each carriage approximately 28” above the ground.

2. With the carriages locked at 28” off the floor, route the equalizer cables up to the top trough.

DANGER

Make sure that the safety locks on each column are fully engaged before attempting to route equalizer cables. Carriages must be equal height from the floor before proceeding.

3. Route the cables through the pulley brackets and reinstall the pulleys. (See figure 18)

Note: the pulleys should have been removed in step 6.

4. Insert the threaded end of the cable through the hole on top of the carriage. Place the M-18 washer and the M-18 nylon lock nut on threaded cable end. Tighten cable nuts until taut, checking that both cables have equal tension. (See figure 19)

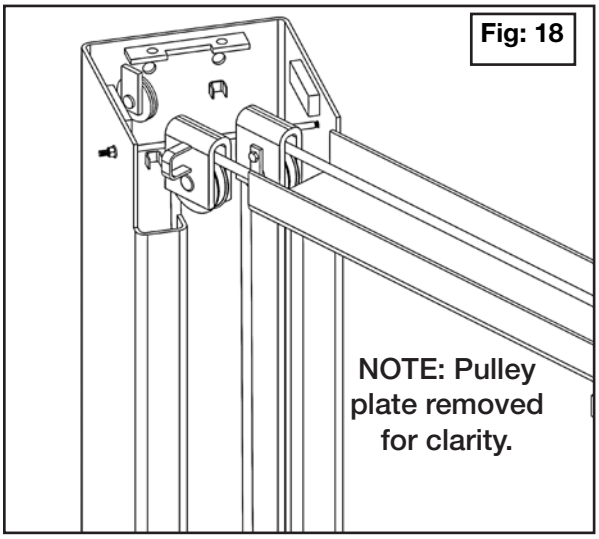

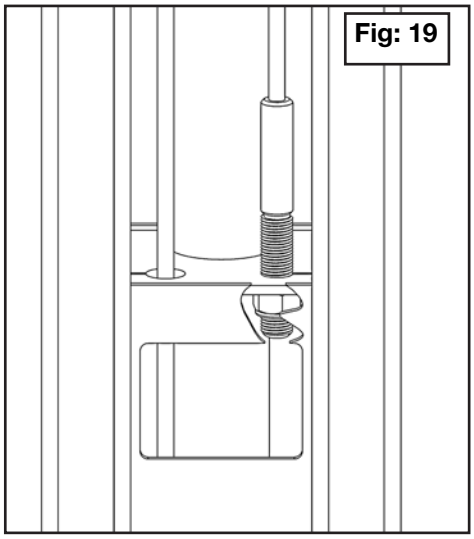

WARNING

When the cable adjusting nuts bottom out on the threaded end of the cable connector and there is still slack in the cables, the cables have stretched beyond the safe useful length and need to be replaced with factory approved cable assemblies. Do not place washers, spacers or other devices to shorten the effective cable length as damage to the lift or injury to persons may occur.

EQUALIZER CABLE ROUTING

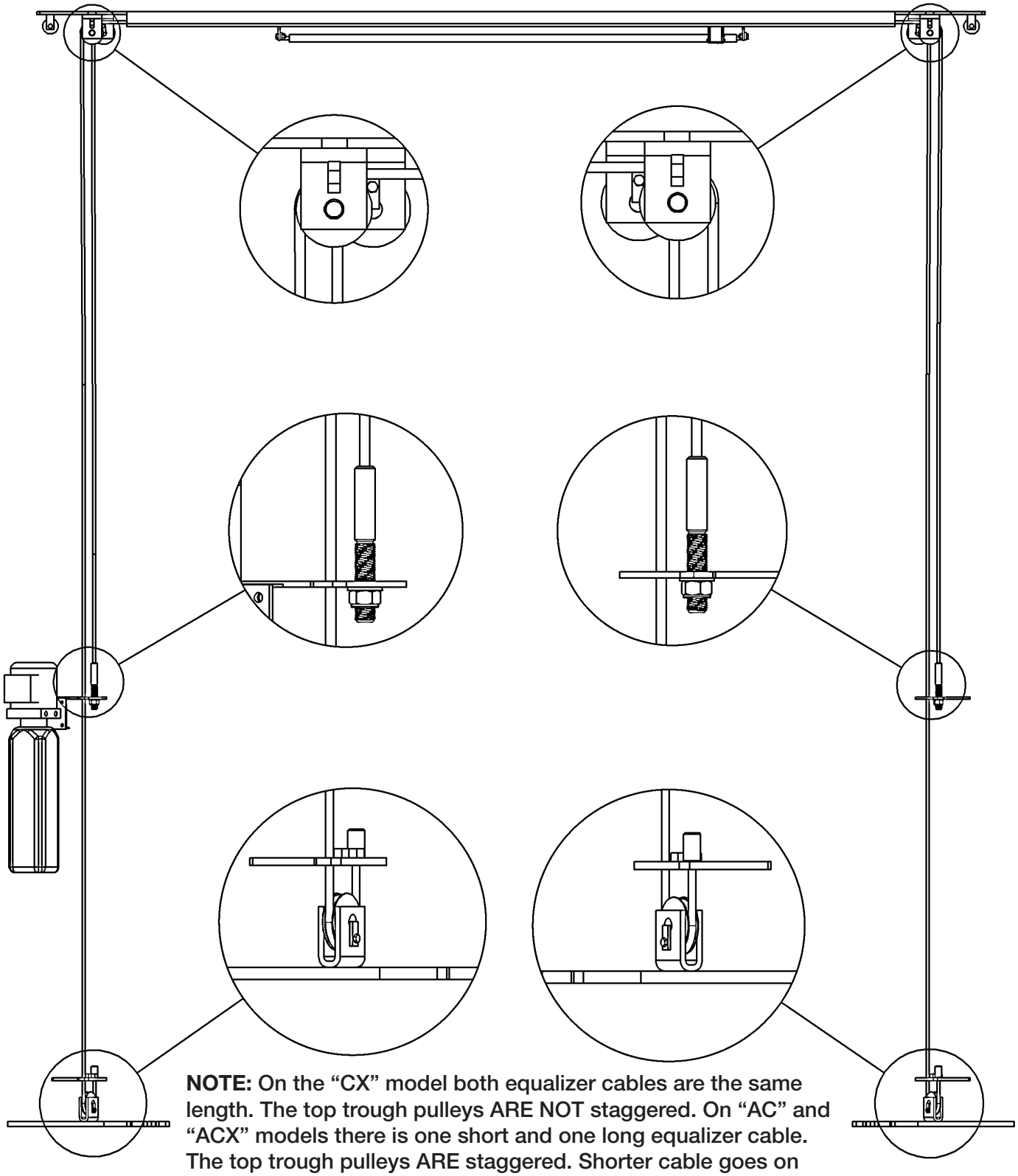

NOTE: On the “CX” model both equalizer cables are the same length. The top trough pulleys ARE NOT staggered. On “AC” and “ACX” models there is one short and one long equalizer cable. The top trough pulleys ARE staggered. Shorter cable goes on pulleys that are staggered closer together.

STEP 12
(Attaching The Power Unit Hose)

WARNING

The power unit hydraulic hose assembly must be routed through the clips in powerside safety cover. Failure to do so can result in personal injury or damage to the lift.

1. With powerside safety cover loosely positioned route power unit hydraulic hose through clips in powerside safety cover. (See figure 20)
2. Install the 90 degree o-ring fitting into the power port of the power unit, do not use teflon on this fitting. The power port is identified by the red plastic plug. Connect the straight fitting on the power unit hose assembly to the 90 degree o-ring fitting on power unit. (See figure 21)
3. Connect other end of power unit hydraulic hose assembly to the bulkhead fitting. (See figure 22)
4. After safeties have been adjusted and checked for proper operation, install and tighten powerside safety cover and offside safety cover, make sure you tighten the jam nut on the inside of the cover as well. (See figure 23)

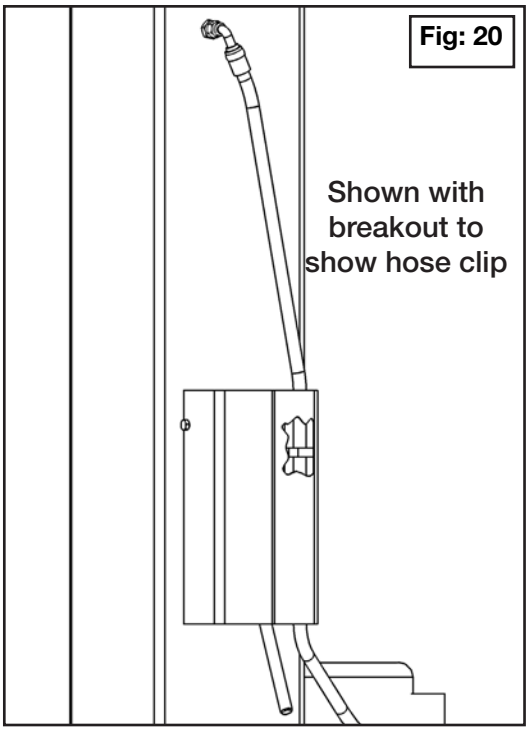

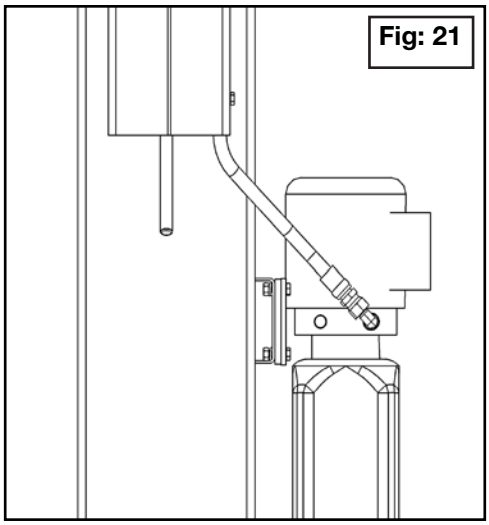

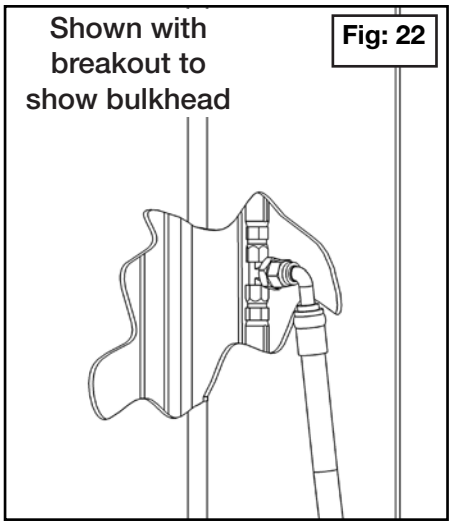

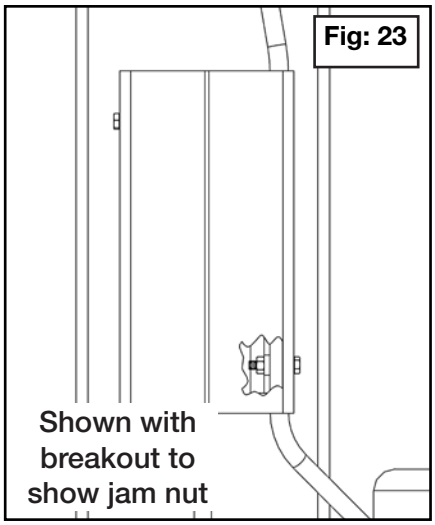

STEP 13
(Installing The Overhead Micro Switch)

DANGER

ALL WIRING MUST BE PERFORMED BY A LICENSED ELECTRICIAN. DO NOT PERFORM ANY MAINTENANCE OR INSTALLATION OF ANY COMPONENTS WITH OUT FIRST ENSURING THAT ELECTRICAL POWER HAS BEEN DISCONNECTED AT THE SOURCE OR PANEL AND CANNOT BE RE-ENERGIZED UNTIL ALL MAINTENANCE AND / OR INSTALLATION PROCEDURES ARE COMPLETED.

1. Install the overhead micro switch as shown. (See figure 24)

2. Route the cord up through the power side column using the unused slot then up and across the top tough through the hole on the microswitch box. (See figure 25 & 26)

CAUTION

When routing the microswitch cable it must be run through the clips in the column and top trough. Failure to do so can cause damage to the lift or vehicles.

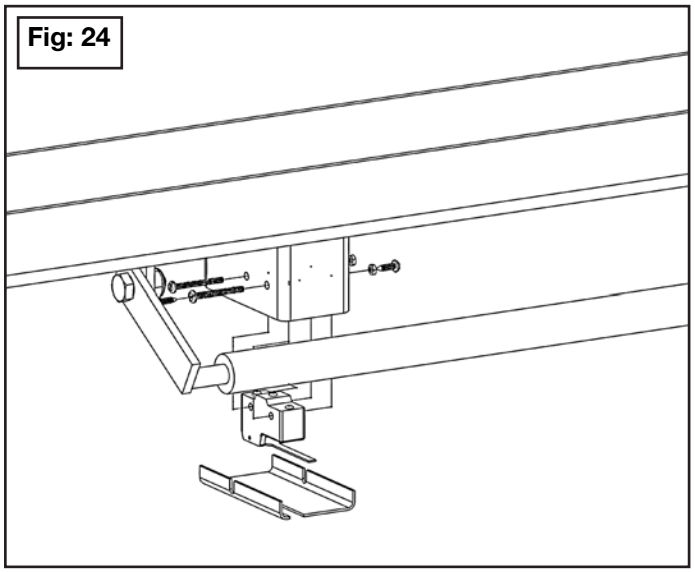

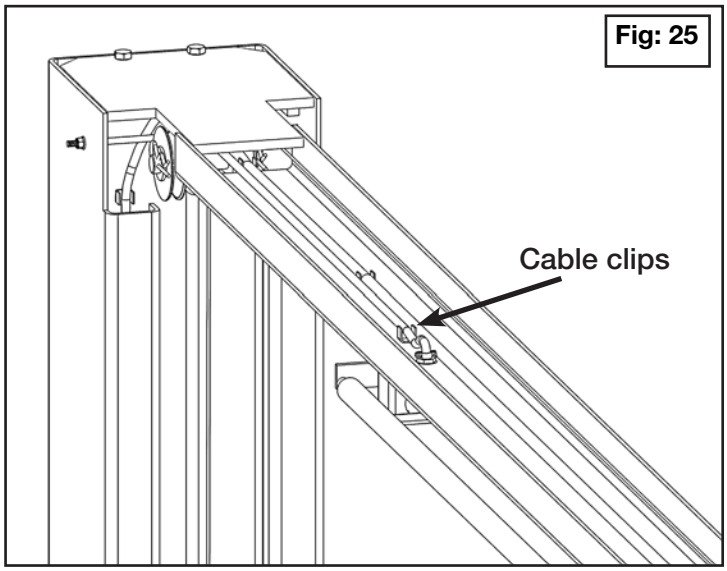

STEP 14
(Wiring the Power Unit)

1. The standard power unit for your lift is 220 volt, 60HZ, single phase. **ALL WIRING MUST BE PERFORMED BY A CERTIFIED ELECTRICIAN ONLY.**

2. **SEE WIRING INSTRUCTIONS AFFIXED TO MOTOR FOR PROPER WIRING INSTRUCTIONS.**

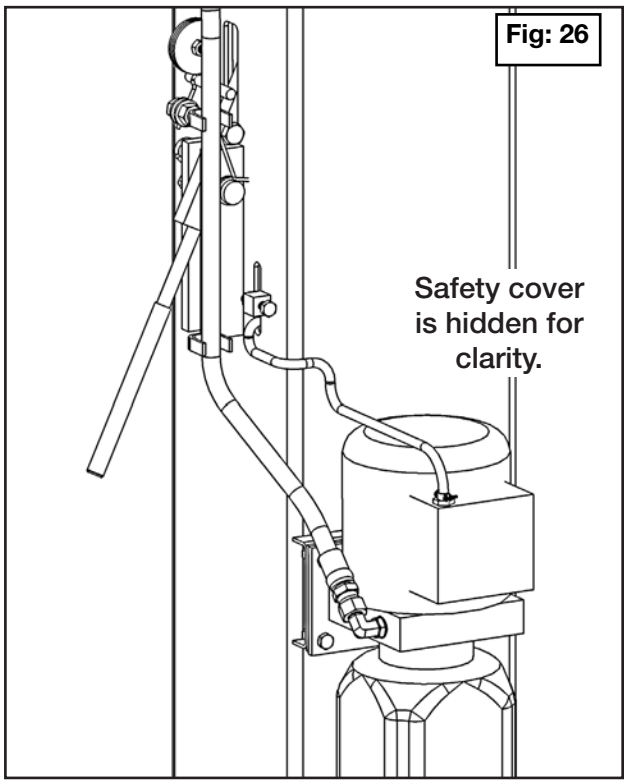

IMPORTANT INSTALLATION NOTES

DANGER

- **DO NOT PERFORM ANY MAINTENANCE OR IN-STALLATION OF ANY COMPONENTS WITH OUT FIRST ENSURING THAT ELECTRICAL POWER HAS BEEN DISCONNECTED AT THE SOURCE OR PANEL AND CANNOT BE RE ENERGIZED UNTIL ALL MAIN-TENANCE AND / OR INSTALLATION PROCEDURES ARE COMPLETED.**

- **NEVER** operate the motor on line voltage less than 208V. Motor damage may occur which is not covered under warranty.

- **DO NOT** run power unit with no oil. Damage to pump can occur.

- The power unit must be kept dry. Damage to power unit caused by water or other liquids such as de-tergents, acid etc. , is not covered under warranty.

- Improper electrical hookup can damage the motor and will not be covered under warranty.

- Motor can not run on 50HZ without a physical change in the motor.
- Use a separate breaker for each power unit.
- Protect each circuit with a time delay fuse or circuit breaker.
- For 208-230 volt, single phase, use a 30 amp fuse.
- For 208-230 volt, three phase, use a 30 amp fuse.
- For 460 volt, three phase, use a 30 amp fuse.

WARNING

- **DO NOT** attempt to raise vehicle until a thorough operation check has been completed.

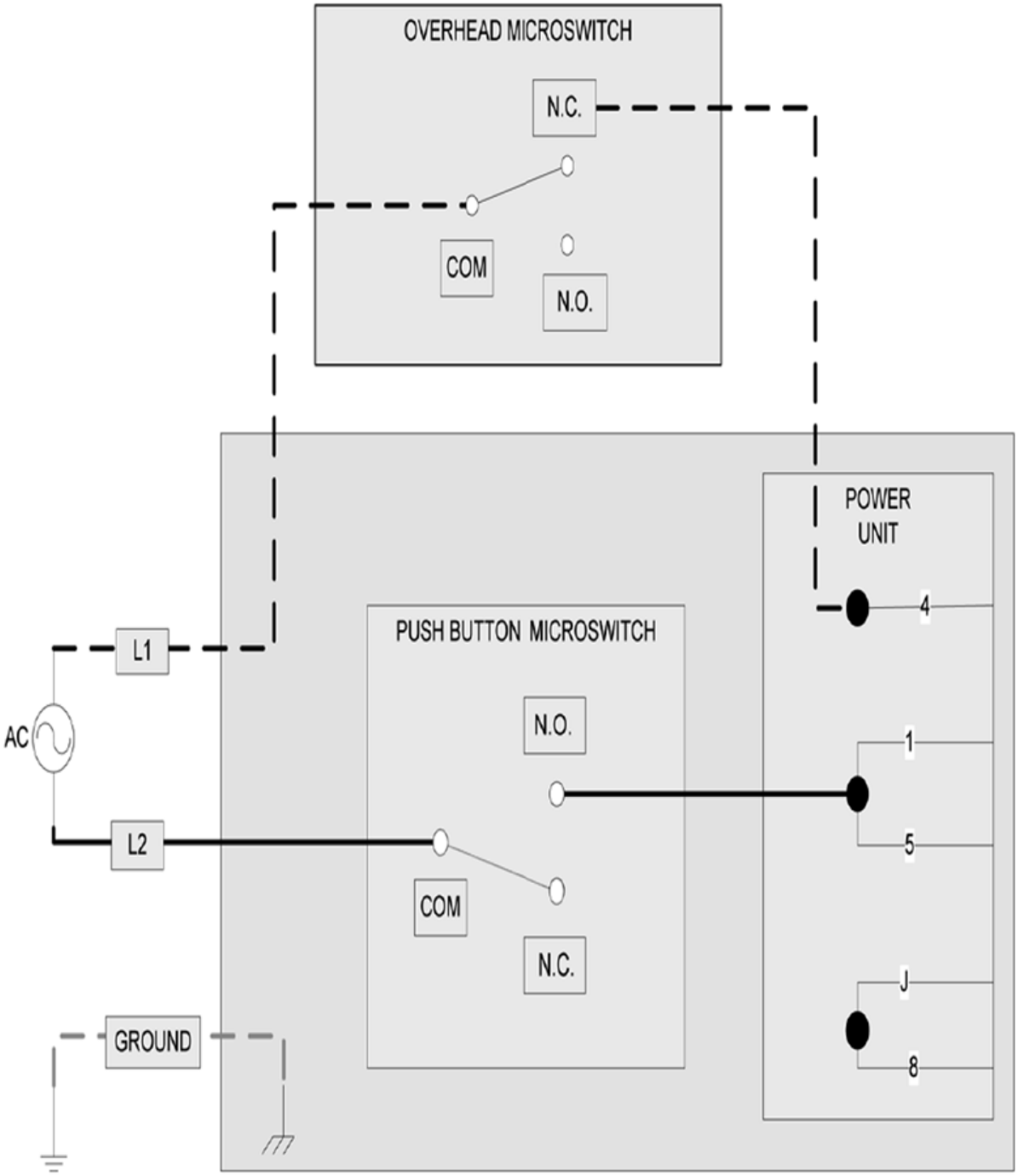

STEP 15
(Installing the Lift Arms)

1. Place the appropriate lift arm assembly in the lift heads. (See figure 27)

2. Install the lift head pins into the lift head and through the holes in the arm assembly.

3. Install the snap ring into the groove in the lift head pin on the under side of the lift head. (See figure 28)

DANGER

The arm restraint gears must be properly positioned and adjusted. Confirmation that the gears are engaging properly must be made prior to operating the lift. Periodic inspection and adjustment is required. Failure to inspect and adjust the arm restraint assemblies on all four arms can result in damage to the vehicle or injury and or death.

4. Loosen the arm restraint gear ring bolts and adjust the arm restraint gears so that the teeth on the gear ring mesh smoothly with the teeth on the gears of the arm restraint pin. (See figure 29)

5. Tighten the gear ring bolts.

6. Verify the operation of the arm restraints by pulling up on the key ring of the arm restraint pin. Pivot the arms back and forth and test the operation of the arm restraint pin in various positions. When releasing the arm restraint pin the pin should drop and the gears should engage.(See figure 30)

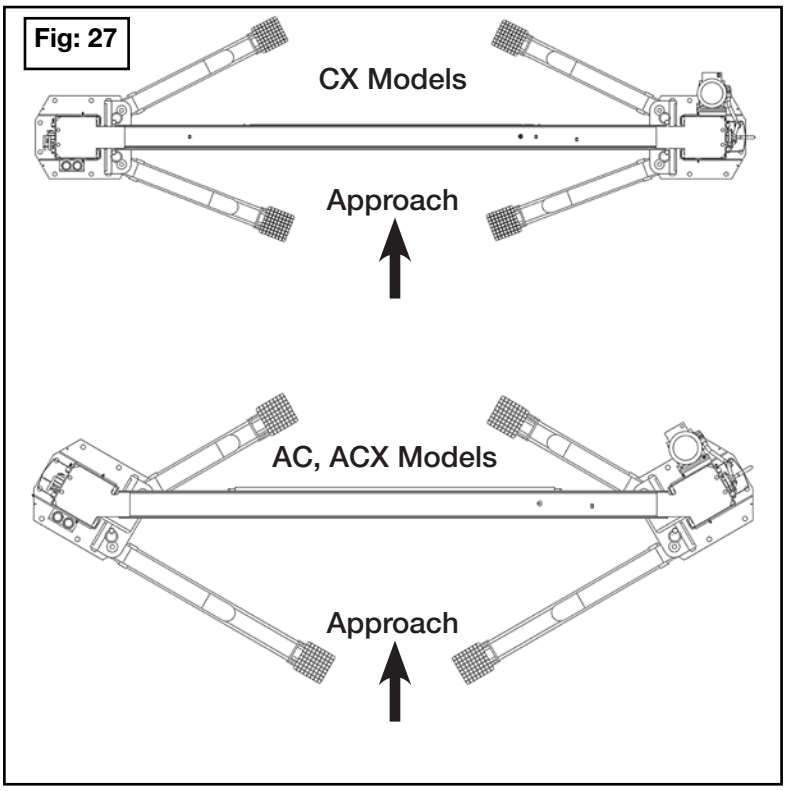

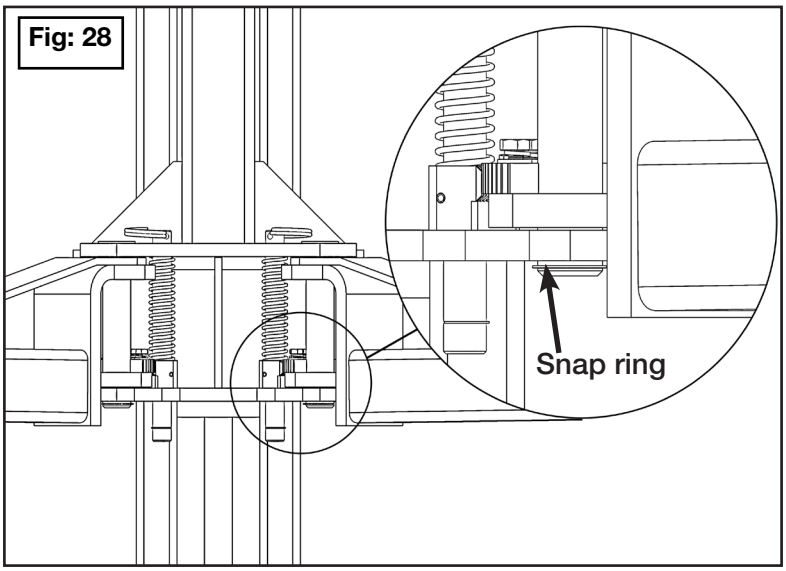

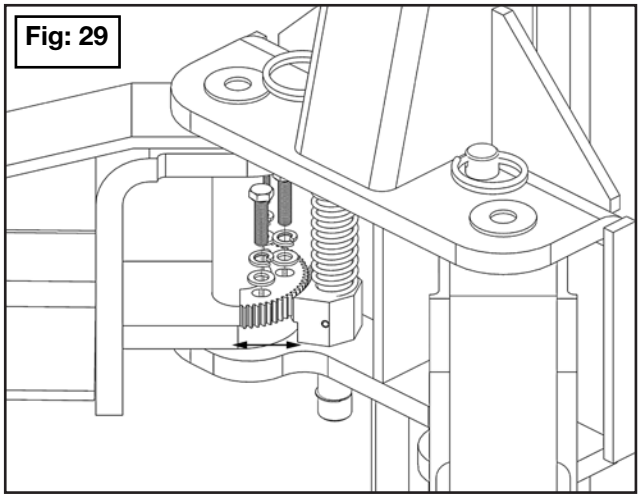

7. Ensure that the arms do not move when a force of approximately 100 pounds or less is applied laterally to the fully extended arms.

8. Adjust the gear ring on the arm as necessary to ensure smooth operation and solid engagement of all four arm restraint pin assemblies with the arm restraint gear ring.

DANGER

Each arm restraint assembly must be inspected and adjusted as needed before each and every time the lift is operated. Do not operate the lift if any of the four arm restraint systems are not functioning properly. Replace any broken components or components with broken teeth only with authorized or approved replacement parts.

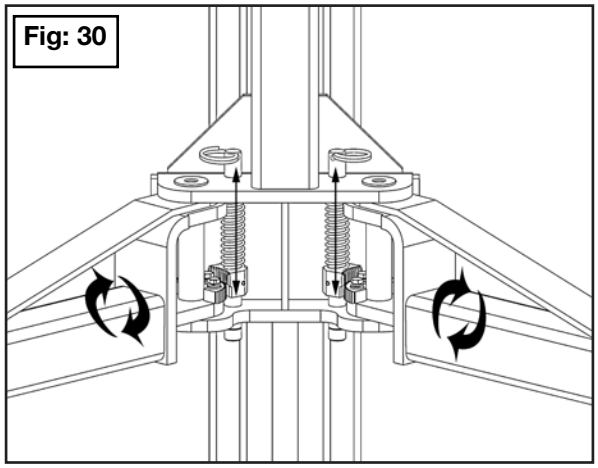

STEP 16
(Leveling Instructions)

1. Before operating your lift, check to make sure that both “A” and “B” measurements are equal. (See figure 31)

2. Lift arms must be level before operation, if your lift arms are not level shim the columns as required. (See figure 7 on page 17)

IMPORTANT NOTE:

The equalizer cables should be checkecd weekly for equal tension. Failure to do this will cause uneven lifting. The cables should always be adjusted so that they are equal tension when resting on the safety locks.

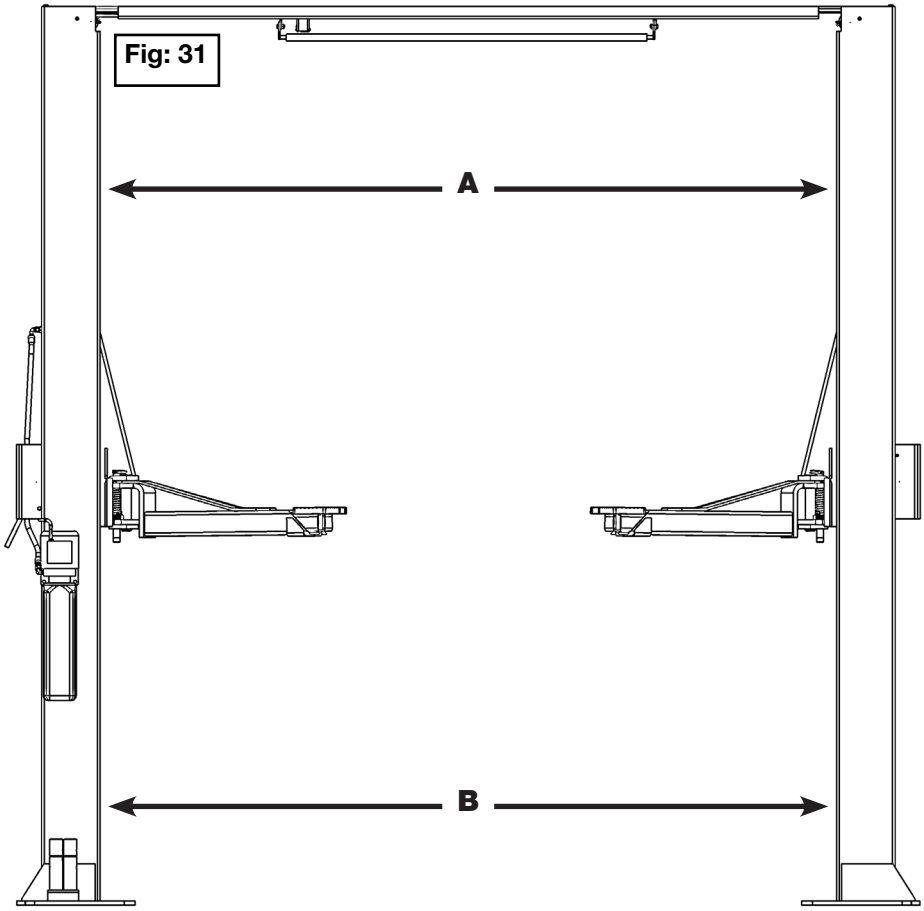

STEP 17
(Start Up)

DANGER

RISK OF EXPLOSION!

This equipment has internal arcing or parts that may spark and should not be exposed to flammable vapors. Motor should not be located in a recessed area or below floor level. NEVER expose motor to rain or other damp environments. **DAMAGE TO MOTOR CAUSED BY WATER IS NOT COVERED UNDER WARRANTY.**

CAUTION

During the **START UP** procedure, observe all operating components and check for proper installation and adjustment. **DO NOT** attempt to raise vehicle until a thorough operational check has been completed.

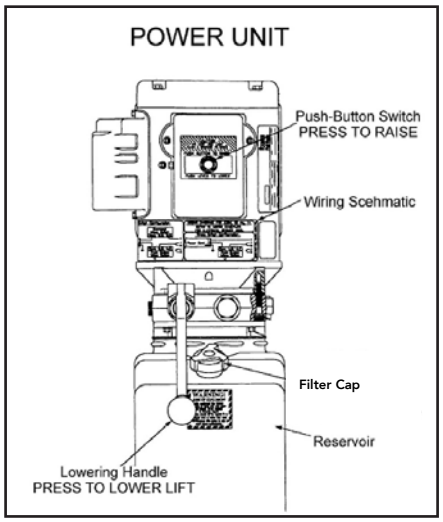

1. Make sure the power unit reservoir is full with 12 quarts of Aw-32 or Dexron III or VI automatic transmission fluid.
2. Spray the inside of the columns where the slide blocks glide with a white lithium grease or equivalent.
3. Test the power unit by pressing the push button switch. If the motor sounds like it is operating properly, raise the lift and check all hose connections for leaks. If the motor gets hot or sounds peculiar, stop and check all electrical connections.
4. Before proceeding, double check to make sure all cables are properly positioned within the grooves of all sheaves. Make sure all cable sheave retaining pins and / or clips are secure.
5. Check to make sure that all safety locks are cleared and free.
6. Continue pressing the raise button until the cables get tight and the lift starts to move.
7. **KEEP HANDS AND FEET CLEAR.** Remove hands and feet from any moving parts. Keep feet clear of lift when lowering. Avoid pinch points.
8. Check all main safety locks to make sure they move freely and spring back to the lock position when released. Lubricate all safety pivot points with a white lithium grease or equivalent.
9. Run the lift up and down a few times to insure that the safety locks are engaging uniformly and that the safety release mechanisms are functioning. Readjust if necessary.

IMPORTANT NOTE:

There will be initial stretching of the cables with increased loads. The equalizer cables should be checkecd weekly for equal tension. Failure to do this will cause uneven lifting. The cables should always be adjusted so that they are equal tension when resting on the safety locks.

POST INSTALLATION CHECK OFF

- ☐ Columns are properly shimmed and stable
- ☐ Anchor bolts are tightened
- ☐ Pivot / sheave pins are properly attached
- ☐ Carriage stop bolts torqued to 2-3 ft. lb
- ☐ Electric power supply confirmed
- ☐ Cables are adjusted properly
- ☐ Safety locks are functioning properly
- ☐ Check for hydraulic leaks
- ☐ Oil level
- ☐ Lubcation of critical components
- ☐ Check for overhead obstructions
- ☐ Lift arms are level
- ☐ All screws, bolts, and pins are secured
- ☐ Surrounng area is clean
- ☐ Operation, maintenance and safety manuals on site.

LUBRICATION POINTS

1. After installation and start up has been completed, lubricate the lift components described below on both columns with a white lithium grease. (See figure 32)

   A. Sides of column where slide blocks make contact.
   B. All 4 arm pivot pins.
   C. All 6 cable pulleys.
   D. Both safety axle pin's and cable sheaves

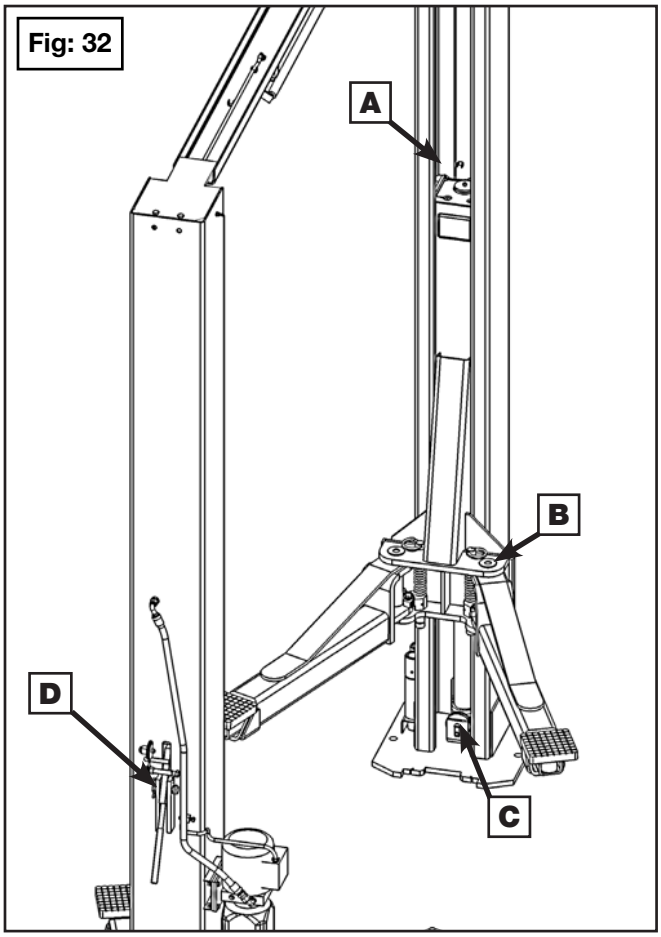

Fig: 32

STEP 18
(Bleeding)

DANGER

The lift will lower when bleeding. Make sure all equipment, personel, hands and feet are clear before bleeding.

1. After electrical power is connected and oil reservoir is full, press button to raise lift.
2. Continue raising until lift cylinders bottom out at full height. Do not continue pressing the button after the lift reaches full height. Damage to the motor can occur if continued.
3. Lower the lift only half way by pressing the safety release handle inward then pressing in the down lever on the power unit.
4. With the lift at half height, slowly loosen the bleed screws located at the top of each cylinder to bleed trapped air. Do not completely remove bleed screws. One full turn should purge any trapped air. Re-tighten after trapped air has escaped. (See figure 33)
5. Lower the lift completely by pressing the safety release handle inward then pressing the down lever on power unit. Wait five minutes and repeat bleeding process one additional time.

STEP 19
(Operational Test Procedure)

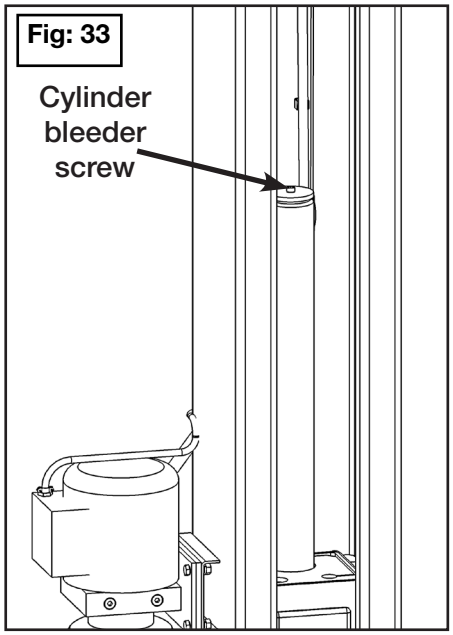

- ◊ Load vehicle as per diagram below using the ALI lifting points guide provided.
- ◊ Raise vehicle 6" - 12" from the ground and check for stability.
- ◊ Visually inspect for leaks and ensure all operating components are secure.
- ◊ Raise vehicle to the desired locking point and lower the lift on to the lock and relieve hydraulic pressure.
- ◊ Raise the vehicle off the locks to allow clearance for the safety lock to clear the locking block on the carriage.
- ◊ Verify both locks release before descending.
- ◊ Lower vehicle entirely until all 4 arm restraint gears are completely released.
- ◊ Reference ANSI/ALI ALIS for all updated safety data.

STAY ALERT

Symmetric Vehicle Loading

Asymmetric Vehicle Loading

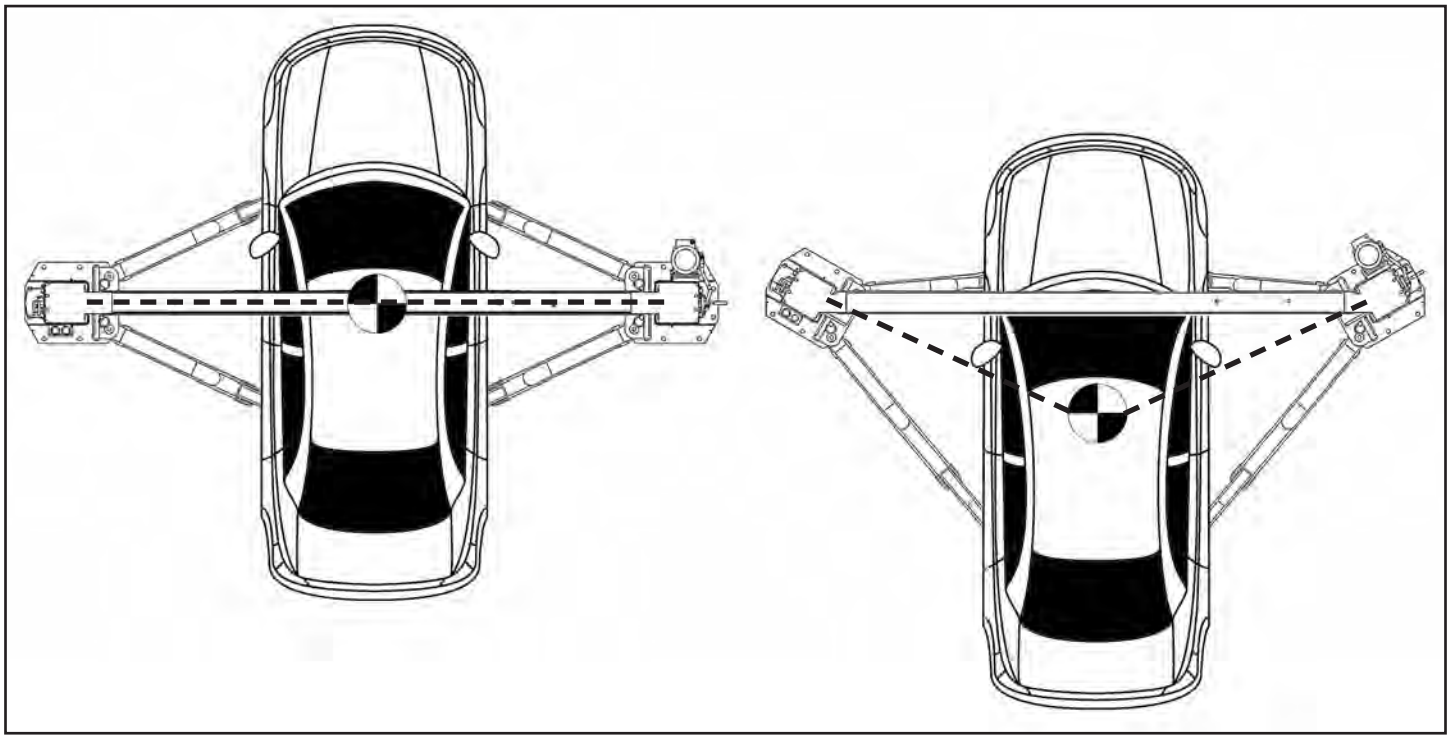

STEP 19
OPERATION INSTRUCTIONS

LIFT OPERATION SAFETY

- **DAILY** inspect your lift. Never operate if it malfunctions or if it has broken or damaged parts. Use only qualified lift service personnel and genuine Dannmar parts to make repairs.
- **THOROUGHLY** train all employees in use and care of lift, using manufacturer's instructions and "Lifting It Right" and "Safety Tips" supplied with the lift.
- **NEVER** allow unauthorized or untrained persons to position vehicle or operate lift.
- **PROHIBIT** unauthorized persons from being in shop area while lift is in use.
- **DO NOT** permit anyone on lift or inside vehicle when it is either being raised or lowered.
- **ALWAYS** keep area around lift free of tools, debris, grease and oil.
- **NEVER** overload lift. Capacity of lift is shown on nameplate affixed to the lift.
- **DO NOT** stand in front of the vehicle while it is being positioned in lift bay.
- **DO NOT** hit or run over lift arms or adapters. This could damage lift or vehicle. Before driving vehicle into lift bay, position arms and adapters to provide unobstructed entrance onto lift.
- **ALWAYS** load vehicle on lift carefully. Position the lift adapters to contact at the vehicle manufacturer's recommended lift points. Raise lift until adapters contact vehicle. Check adapters for secure contact with vehicle. Raise lift to desired working height. (See figure 34)
- **DO NOT** block open or override self closing lift controls; they are designed to return to the "Off" or Neutral position when released.
- **DO NOT** remove or disable arm restraints.
- **ALWAYS** remain clear of lift when raising or lowering vehicles.
- **ALWAYS** use safety stands when removing or installing heavy components.
- **DO NOT** go under raised vehicle if safety locks are not engaged.

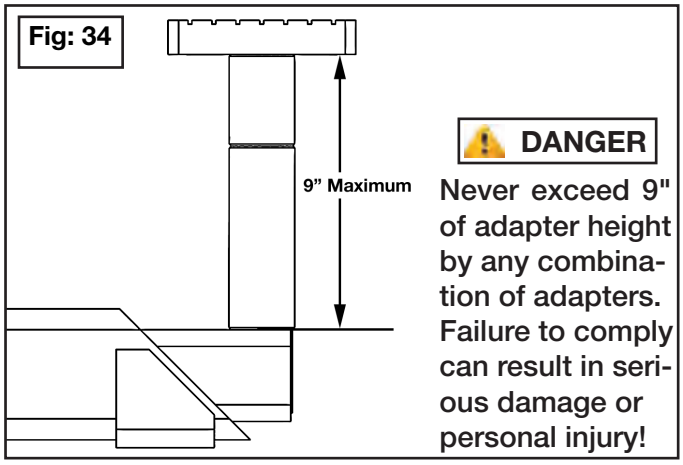

DANGER

VISUALLY CONFIRM THAT ALL PRIMARY SAFETY LOCKS ARE ENGAGED BEFORE ENTERING WORK AREA.

- Hydraulic components that are used on this lift are intended to raise and lower the lift only and are not meant to be a load holding device. Remain clear of the elevated lift unless visual confirmation is made that all primary safety locks are fully engaged and the lift is **LOWERED** onto the safety locks, Refer to installation /operation manual for proper safety lock procedures and /or further instruction.
- **NEVER LEAVE LIFT IN ELEVATED CONDITION** unless all Safety Locks are engaged.
- **AVOID** excessive rocking of vehicle while on lift.
- **ALWAYS CLEAR AREA** if vehicle is in danger of falling.

⚠ DANGER

When lowering the lift **PAY CAREFUL ATTENTION** that all personnel and objects are kept clear. **ALWAYS** keep a visual line of site on the lift **AT ALL TIMES. ALWAYS** make sure that **ALL LOCKS** are disengaged. If one of the locks inadvertently locks on descent the lift and/or vehicle may disrupt causing personal injury or death.

- **ALWAYS REMOVE** tool trays, stands, etc. before lowering lift.
- **ALWAYS RELEASE** safety locks before attempting to lower lift.
- **ALWAYS POSITION** the lift arms and adapters to provide an unobstructed exit before removing vehicle from lift area.

TO RAISE THE LIFT

⚠ WARNING

To avoid personal injury and / or property damage, permit only trained personnel to operate lift. After reviewing these instructions, get familiar with lift controls by running the lift through a few cycles before loading vehicle on lift. Always lift the vehicle using all four adapters. **NEVER** raise just one end, one corner, or one side of vehicle.

1. Before Loading: Lift must be fully lowered and service bay clear of all personnel before the vehicle is brought on lift with the swing arms set to the full drive thru position.
2. Loading: Swing arms under vehicle and position adapters at vehicle manufacturer's recommended lift points. Use height extenders or optional frame cradle adapters when necessary to ensure good contact. (See figure 34)
3. Some vehicles may have the manufacturer's Service Garage Lift Point locations identified by triangle shape marks on the undercarriage (reference ANSI/SAE J2184-1992). Also, there may be a label located on the right front door jamb area showing specific vehicle lift points.

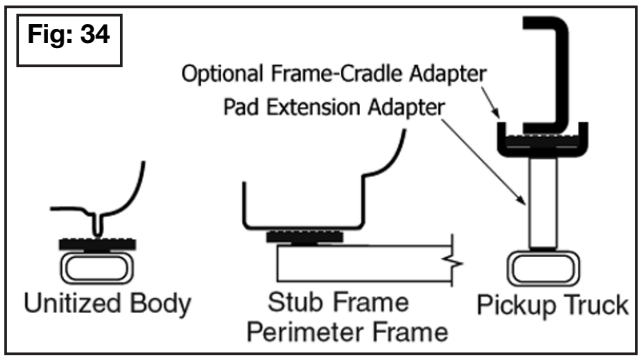

⚠ WARNING

Many specialty or modified vehicles cannot be raised on a two post frame engaging lift. Contact vehicle manufacturer for raising or jacking details.

4. Position the vehicle for proper weight distribution. Adjust the arms under the vehicle to allow the adapters to contact the vehicle at the manufacturer's recommended pick up points.
5. If the specific vehicle's lift points are not identified, or if the vehicle has additional or uniquely positioned payload, have a qualified person calculate the vehicle center of gravity or have the vehicle center of gravity determined at a vehicle scale. Load the vehicle with the center of gravity midway between adapters.
6. Push the RAISE button or rotate the control switch on the power unit.

Important Note:

Allow (2) seconds between motor starts. Failure to comply may cause motor burnout.

TYPICAL LIFTING POINTS

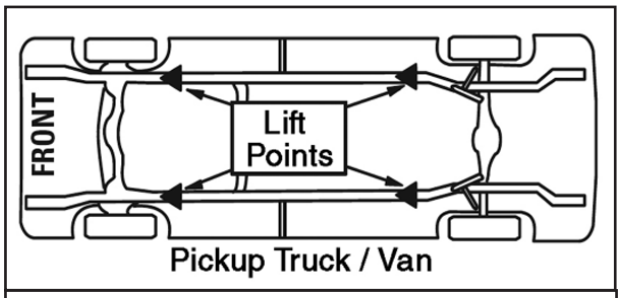

Pickup Truck / Van

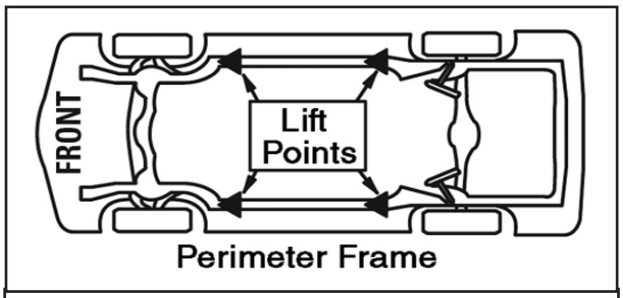

Perimeter Frame

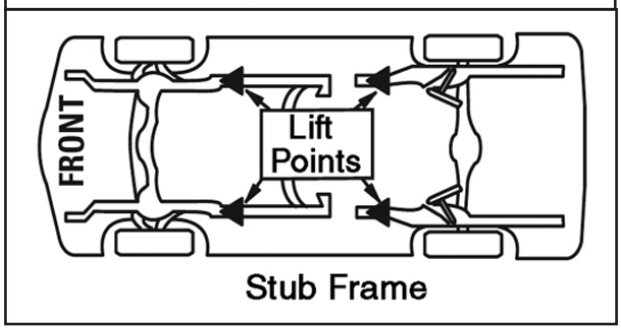

Stub Frame

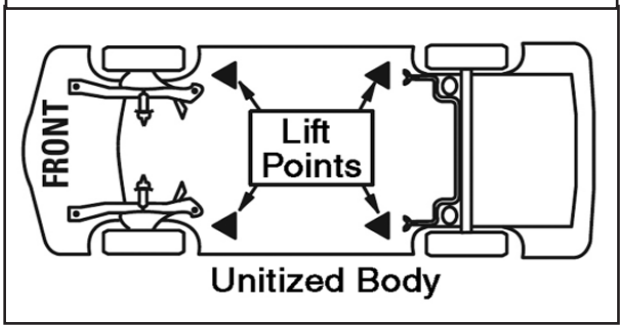

Unitized Body

WARNING

Make sure vehicle is neither front nor rear heavy. Center of balance should be midway between adapters as shown below.

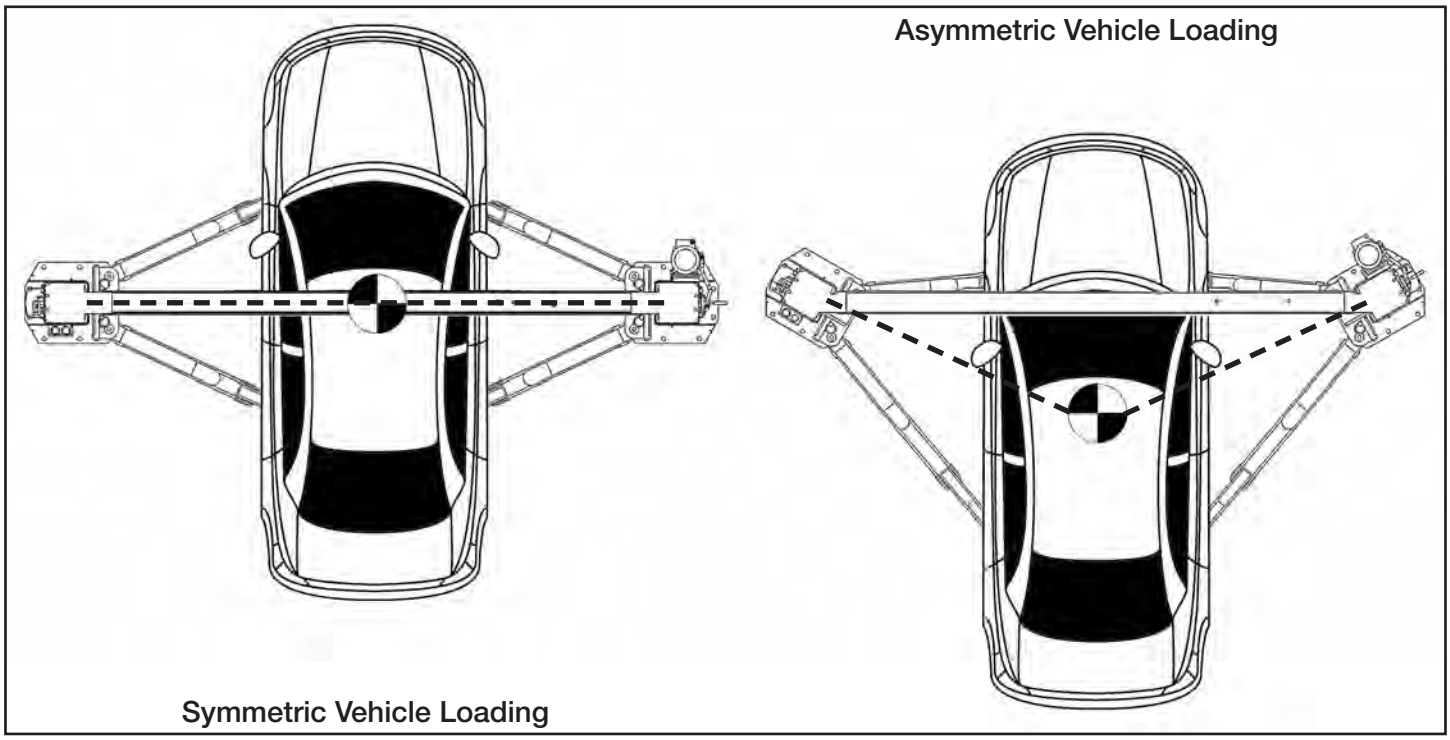

7. Stop before making contact with vehicle. Check arm restraint pins for engagement. If required, slightly move arm to allow restraint gear and pawl to mesh. **DO NOT** hammer arm restraint pin down as this will damage the restraint gear teeth.

8. Raise vehicle until tires clear the floor.

9. Stop and check adapters for secure contact at vehicle manufacturer's recommended lift points.

10. Continue to raise to desired height only if vehicle is secure on lift.

11. DO NOT go near or under a raised vehicle if all four adapters are not in secure contact with vehicle at vehicle manufacturer's recommended lift points.

12. Repeat entire loading and raising procedures if required.

13. Lower lift onto safety locks.

DANGER

VISUALLY CONFIRM THAT ALL PRIMARY SAFETY LOCKS ARE ENGAGED BEFORE ENTERING WORK AREA.

Suspension components us on this lift are intended to raise and lower lift only and are not meant to be load holding devices. Remain clear of elevated lift unless visual confirmation is made that all primary safety locks are fully engaged and the lift is **LOWERED** onto the safety locks, refer to installation / operation manual for proper safety lock procedures and / or further instruction.

- DO NOT enter work area or go under vehicle if safety locks are not engaged.
- CLEAR AREA if vehicle is in danger of falling.
- DO NOT position yourself between a wall and the lift. If the vehicle falls in that direction, you may be severely injured.
- Before attempting to lift pickup trucks or other truck frame vehicles, be sure that:
  - ☐ Vehicle frame is strong enough to support its weight and has not been weakened by modification or corrosion.
  - ☐ Vehicle individual axle weight does not exceed one half lift capacity.
  - ☐ Adapters are in secure contact with frame atvehicle manufacturers recommended lift points.
  - ☐ Vehicle is stable on lift and neither front nor "tail" heavy.
- Avoid excessive rocking of vehicle while on lift.
- Always use safety stands as needed or when removing or installing heavy components.

TO LOWER THE LIFT

WARNING

When lowering the lift **PAY CAREFUL ATTENTION** that all personnel and objects are kept clear. **ALWAYS** keep a visual line of site on the lift **AT ALL TIMES**. **ALWAYS** make sure that **ALL LOCKS** are disengaged. If one of the locks inadvertently locks on descent the lift and / or vehicle may disrupt causing personal injury or death.

1. Remove all tools or other objects from the lift area.
2. Raise lift off safety locks. Make sure you raise the lift by at least two inches to allow adequate clearance for the locks to clear.
3. Pull both safety lock release cables.
4. Push the **LOWERING** valve handle on the power unit to lower.
5. Remain clear of lift when lowering vehicle. Observe pinch point warning decals.
6. Remove adapters from under vehicle and swing arms to full drive thru position before moving vehicle.

7. **NEVER**, drive over lift arms.

8. If lift is not operating properly, Do Not use until adjustment or repairs are made by qualified lift service personnel.

MAINTENANCE INSTRUCTIONS

CAUTION

If you are not completely familiar with automotive lift maintenance procedures; **STOP:** Contact the factory for instructions. To avoid personal injury, permit only Trained Lift Service Personnel to perform maintenance on this equipment.

- Always keep bolts tight. Check periodically.
- Always keep lift components clean.
- Always if oil leakage is observed, call local service representative.
- Always if electrical problems develop, call local service representative.
- Always replace **ALL FAULTY PARTS** before lift is put back into operation.
- Daily: Make a visual inspection of **ALL MOVING PARTS** and check for excessive signs of wear.
- Daily: Check Safety Locks to insure they are in good operating condition.
- Daily: Check cables and sheaves for wear. Replace worn parts as required with genuine Dannmar parts.
- Daily: Inspect adapters for damage or excessive wear. Replace as required with genuine Dannmar parts.
- Weekly: Lubricate all rollers with white lithium grease.
- Weekly: Check all cable connections, bolts and pins to insure proper mounting.
- Monthly: Check equalizer cable tension. Adjust per lift installation instructions.
- Monthly: Lubricate locking latch shafts. Push latch handle several times for oil to penetrate pivot points.
- Every 3 Months: Check anchor bolts for tightness. Anchors should be torqued to 90 ft/lbs.
- Semi Annually: Check fluid level of lift power unit and refill if required per lift installation instructions.
- Replace all caution, warning or safety related decals on the lift if unable to read or missing. Reorder labels from Dannmar.
- Refer to ANSI/ALI ALOIM booklet for periodic inspection checklist and maintenance log sheet.

REQUIRED MONTHLY MAINTENANCE

- ☐ Check all arm adjusting locks for proper operation.
- ☐ Check all cables connections, bolts and pins to insure proper mounting and torque.
- ☐ Visually inspect safeties for proper operation.
- ☐ Lubricate columns with grease.
- ☐ Inspect all anchors bolts and retighten if necessary.
- ☐ Check all columns for squareness and plumb.
- ☐ Inspect all pivot arms pins making sure they are properly secure.
- ☐ Check equalizer cable tension, and adjust if necessary.

1. **WARNING!:** If cement anchor bolts are loose or any component of the lift is found to be defective,

   DO NOT USE THE LIFT!!

2. Never operate the lift with any person or equipment below the vehicle.
3. Never exceed the rated lift capacity.
4. Always insure the safeties are engaged before any attempt is made to work on or near the vehicle.
5. Never leave lift in elevated position unless the safeties are engaged.
6. Do not permit electric motor to get wet! Motor damage caused by dampness is not covered under warranty.

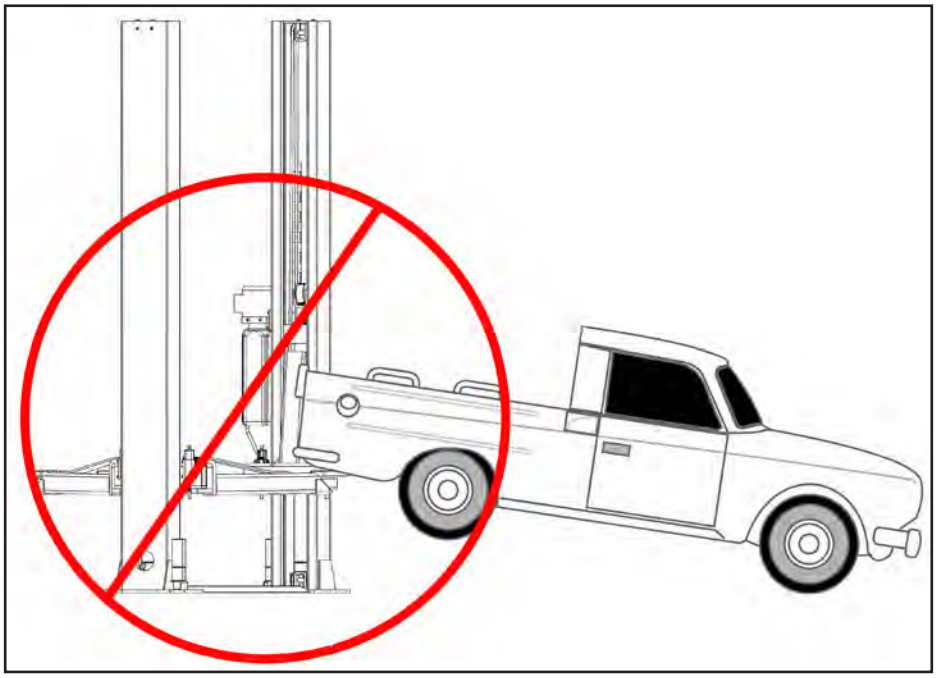

NEVER LIFT ANY VEHICLE IN ANY MANNER WITH LESS THE ALL FOUR (4) ARMS. RATED CAPACITY OF EACH LIFT ARM IS NO GREATER THAT ONE FOURTH (1/4) OF THE OVERALL LIFT CAPACITY.

WIRE ROPE INSPECTION AND MAINTENANCE

◊ Lifting cables should be replaced every three - five years or when visible signs of damage are apparent.

DO NOT USE LIFT WITH DEFECTIVE / WORN CABLES.

◊ Lifting cables should be maintained in a well lubricated condition at all times. Wire rope is only fully protected when each wire strand is lubricated both internal and external. Excessive wear will shorten the life of the wire rope. The factory suggested wire rope lubricant that penetrates to the core of the rope and provides long term lubrication between each individual strand is 90-WT gear oil or ALMA-SOL® Wire Rope Lubricant. In order to make sure that the inner layers of the rope remain well lubricated, lubrication should be carried out at intervals not exceeding three months during operation.

◊ All sheaves and guide rollers in contact with the moving rope should be given regular visual checks for surface wear and lubricated to make sure that they run freely. This operation should be carried out at appropriate intervals generally not exceeding three months during operation. For all sheave axles, the factory recommends standard wheel bearing grease. For all sheaves and / or guide rollers, the factory recommends 90-WT gear oil or similar heavy lubricant applied by any method including pump / spray dispensing, brush, hand and / or swabbing.

HOW OFTEN TO INSPECT

◊ Lifting cables should be visually inspected at least once each day when in use, as suggested by American Petroleum Institute (API) RP54 guidelines.

◊ Any lifting cables that have met the criteria for removal must be immediately replaced.

WHEN TO REPLACE LIFTING CABLES DUE TO BROKEN WIRES

◊ Lifting cables should be removed from service when you see six randomly distributed broken wires within any one lay length, or three broken wires in one strand within one lay length.

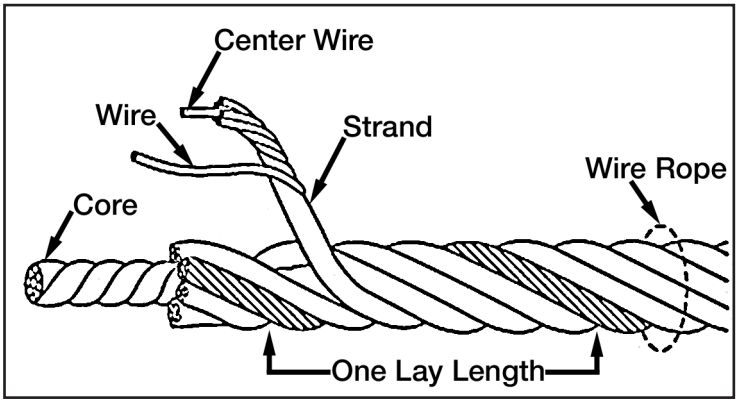

OTHER REASONS TO REPLACE LIFTING CABLES

◊ Corrosion that pits the wires and / or connectors.

◊ Evidence of kinking, crushing, cutting, bird caging or a popped core.

◊ Wear that exceeds 10% of a wire's original diameter.

◊ Evidence of heat damage.

HOW TO FIND BROKEN WIRES

◊ The first step is to relax your rope to a stationary position and move the pickup points off the sheaves. Clean the surface of the rope with a cloth or a wire brush if necessary so you can see any breaks.

◊ Flex the rope to expose any broken wires hidden in the valleys between the strands.

◊ Visually check for any broken wires. One way to check for crown breaks is to run a cloth along the rope to check for possible snags.

◊ With an awl, probe between wires and strands and lift any wires that appear loose. Evidence of internal broken wires may require a more extensive rope examination.

LIFT LOCKOUT / TAGOUT PROCEDURE

Purpose:

This procedure establishes the minimum requirements for the lockout of energy that could cause injury to personnel by the operation of lifts in need of repair or being serviced. All employees shall comply with this procedure.

Responsibility:

The responsibility for assuring that this procedure is followed is binding upon all employees and service personnel from outside service companies (i.e., authorized installers, contactors, etc.). All employees shall be instructed in the safety significance of the lockout procedure by the facility owner/manager. Each new or transferred employee along with visiting outside service personnel shall be instructed by the owner/manager (or assigned designee) in the purpose and use of the lockout procedure.

Preparation:

Employees authorized to perform lockout shall ensure that the appropriate energy isolating device (i.e., circuit breaker, fuse, disconnect, etc.) is identified for the lift being locked out. Other such devices for other equipment may be located in close proximity of the appropriate energy isolating device. If the identity of the device is in question, see the shop supervisor for resolution. Assure that proper authorization is received prior to performing the lockout procedure.

Sequence of Lockout Procedure:

1. Notify all affected employees that a lockout is being performed and the reason for it.
2. Unload the subject lift. Shut it down and assure the disconnect switch is “OFF” if one is provided on the lift.
3. The authorized lockout person operates the main energy isolation device removing power to the subject lift.
   - If this is a lockable device, the authorized lockout person places the assigned padlock on the device to prevent its unintentional reactivation. An appropriate tag is applied stating the person’s name, at least 3” x 6” in size, an easily noticeably color, and states not to operate device or remove tag.
   - If this device is a non-lockable circuit breaker or fuse, replace with a “dummy” device and tag it appropriately as mentioned above.
4. Attempt to operate lift to assure the lockout is working. Be sure to return any switches to the “OFF” position.
5. The equipment is now locked out and ready for the required maintenance or service.

Restoring Equipment to Service:

1. Assure the work on the lift is complete and the area is clear of tools, vehicles, and personnel.
2. At this point, the authorized person can remove the lock (or dummy circuit breaker or fuse) & tag and activate the energy isolating device so that the lift may again be placed into operation.

Rules for Using Lockout Procedure:

Use the Lockout Procedure whenever the lift is being repaired or serviced, waiting for repair when current operation could cause possible injury to personnel, or for any other situation when unintentional operation could injure personnel. No attempt shall be made to operate the lift when the energy isolating device is locked out.

Safe Lift Operation

Automotive and truck lifts are critical to the operation and profitability of your business. The safe use of this and other lifts in your shop is critical in preventing employee injuries and dama lifts safely you can insure that your shop is profitable, productive and safe. Safe operation of automotive lifts requires that only trained employees should be allowed to use the lift.

TRAINING SHOULD INCLUDE, BUT NOT LIMITED TO:

- Proper positioning of the vehicle on the lift arms. (See manufacturers minimize wheel base loading requirements.)
- Use of the operating controls and the lift capacity.
- Proper use of jack stands or other load supporting devices.
- Proper use, understanding and visual identification of safety lock devices and their operation.
- Reviewing the safety rules. Proper housekeeping procedures (lift area should be free of grease, oil, tools, equipment, trash, and other debris).
- A daily inspection of the lift should be completed prior to its use. Safety devices, operating controls, lift arms and other critical parts should be inspected prior to using the lift.
- All maintenance and repairs of the lift should be completed by following repair parts should meet or exceed OEM specifications. Repairs should only be completed by a qualified lift technician.
- The vehicle manufacturer's recommendations should be used for spotting and lifting the vehicle.

LIFT OPERATION / SAFETY

- It is important that you know the load limit. Be careful that you do not overload the lift . If you are unsure what the load limit is, check the data plate found on one of the lift columns or contact the manufacturer. The center of gravity should be followed closely to what the manufacturer recommends.
- Always make sure you have proper overhead clearance. Additionally, check that attachments, (vehicle signs, campers, antennas, etc.) are not in the way. Be sure that prior to the vehicle being raised, the doors, trunk, and hood are closed securely.
- Prior to being raised, make sure there is no one standing closer than six feet from the lift. After positioning the vehicle on the lift runways, set the emergency brake, make sure the ignition is off, the doors are closed, overhead obstructions are cleared, and the transmission is in neutral.
- Double check that the automatic chock devices are in position and then when the lift is raised, observe the chocks.
- Put pads or adapters in the right position under the contact points that have been recommended.
- The lift should be raised just until the vehicle's wheels are about one foot off the ground. If contact with the vehicle is uneven or it appears that the vehicle is not sitting secure, carefully lower the lift and readjust.
- Always consider potential problems that might cause a vehicle to slip, i.e., heavy cargo, undercoating, etc.
- Pay attention when walking under a vehicle that is up on the hydraulic lift.

DANGER

- **DO NOT** leave the controls while the lift is still in motion.
- **DO NOT** stand directly in front of the vehicle or in the bay when vehicle is being loaded or driven into position.
- **DO NOT** go near vehicle or attempt to work on the vehicle when being raised or lowered.
- **REMAIN CLEAR** of lift when raising or lowering vehicle.
- **DO NOT** rock the vehicle while on the lift or remove any heavy component from vehicle that may cause excessive weight shift.
- **DO NOT** lower the vehicle until people, materials, and tools are clear.
- **ALWAYS INSURE** that the safeties are engaged and lowered on to the safety ladders before any attempt is made to work on or near vehicle.
- Some vehicle maintenance and repair activities may cause the vehicle to shift. Follow the manufacturer's guidelines when performing these operations. The use of jack stands or alternate lift points may be required when completing some repairs.
- **READ AND UNDERSTAND** all safety warning procedures before operating lift.
- **KEEP HANDS AND FEET CLEAR**. Remove hands and feet from any moving parts. Keep feet clear of lift when lowering, and avoid pinch points.
- **ONLY TRAINED OPERATORS** should operate this lift. All non trained personnel should be kept away from work area.
- **NEVER** let non trained personnel come in contact with, or operate lift.
- **USE LIFT CORRECTLY**. Use lift in the proper manner. Never use lifting adapters other than what is approved by the manufacturer.
- **DO NOT** override self closing lift controls.
- **CLEAR AREA** if vehicle is on danger of falling.
- **STAY ALERT**. Watch what you are doing. Use common sense. Be aware.
- **CHECK FOR DAMAGED PARTS.** Check for alignment of moving parts, breakage of parts or any condition that may affect its operation. Do not use lift if any component is broken or damaged.
- **NEVER** remove safety related components from the lift. Do not use lift if safety related components are damaged or missing.
- When the lift is being lowered, make sure everyone is standing at least six feet away.
- Be sure there are no jacks, tools, equipment, left under the lift before lowering.
- Always lower the vehicle down slowly and smoothly.

TROUBLESHOOTING GUIDE

LIFT WILL NOT RAISE

POSSIBLE CAUSE

1. Air in oil, (1,2,8,13)
2. Cylinder binding, (9)
3. Cylinder leaks internally, (9)
4. Motor run backward under pressure, (11)
5. Lowering valve leaks, (3,4,6,10,11)
6. Motor runs backwards, (7,14,11)
7. Pump damaged, (10,11)
8. Pump won't prime, (1,8,13,14,3,12,10,11)
9. Relief valve leaks, (10,11)
10. Voltage to motor incorrect, (7,14,11)

REMEDY INSTRUCTION

1. Check for proper oil level. The oil level should be up to the bleed screw in the reservoir with the lift all the way down.
2. Bleed cylinders.
3. Flush Release valve, hold release handle down and start unit for 15 seconds allowing possible contamination to break up.
4. Dirty oil, replace oil with clean Aw-32 hydraulic fluid or Dextron III or VI ATF.
5. Tighten fasteners to recommended torques settings.
6. Check for free movement of release. If handle does not move freely, replace bracket or handle assembly.
7. Check motor is wired correctly. Compare wiring of motor to electrical diagram on drawing.
8. Oil seal is damaged or cocked. Replace oil seal around pump shaft.
9. Consult Lift Manufacturer.
10. Replace with new part.
11. Return unit for repair.
12. Check pump mounting bolts. Bolts should be torqued to 15 - 18 ft. lbs.
13. Inlet screen clogged. Clean inlet screen or replace.
14. Check wall outlet voltages and wiring. Make sure unit and wall outlet are wired

MOTOR WILL NOT RUN

POSSIBLE CAUSE

1. Fuse blown, (5,2,1,3,4)
2. Limit switch burned out, (1,2,3,4)
3. Microswitch burned out, (1,2,3,4)
4. Motor burned out, (1,2,3,4,6)
5. Voltage to motor incorrect, (2,1,8)

REMEDY INSTRUCTION

1. Check for correct voltage. Compare supply voltage with voltage on motor name tag. Check that the wire is sized correctly.
2. Check motor is wired correctly. Compare wiring of motor to electrical diagram on drawing.
3. Don't use extension cords. According to N.E.C. : " The size of the conductors should be such that the voltage drop would not exceed 3% to the farthest outlet for power". Do not run motor at 115 VAC – damage to the motor will occur.
4. Replace with new part.
5. Reset circuit breaker / fuse.
6. Return unit for repair.
7. See Installation Manual.
8. Check wall outlet voltage and wiring. Make sure unit and wall outlet is wired properly. Motor must run at 208/230 VAC.

LIFT LOWERS SLOWLY OR NOT AT ALL

POSSIBLE CAUSE

1. Cylinders binding, (1)
2. Release valve clogged, (5,4,2,3)
3. Pressure fitting too long, (6)

REMEDY INSTRUCTION

1. Consult Lift Manufacturer.
2. Replace with new part.
3. Return for repair.
4. Check oil. Use clean Aw-32 hydraulic oil or Dexron III or VI automatic transmission fluid only. If fluid is contaminated, replace with clean fluid and clean entire system.
5. Clean release valve. Wash release valve in solvent and blow out with air.
6. Replace fitting with short thread lead.

WILL NOT RAISE LOADED LIFT

POSSIBLE CAUSE

1. Air in oil, (1,2,3,4)
2. Cylinder binding, (5)
3. Cylinder leaks internally, (5)
4. Lift overloaded, (6,5)
5. Lowering valve leaks, (7,8,1,5,9)
6. Motor runs backwards, (10,12,9)
7. Pump damaged, (5,9)
8. Pump won't prime, (1,2,3,4,5,11,9)
9. Relief valve leaks, (8,5,9)
10. Voltage to motor incorrect, (10,12,5)

REMEDY INSTRUCTION

1. Check oil level. The oil level should be up to the bleed screw in the reservoir with the lift all the way down.
2. Check / Tighten inlet tubes or Replace inlet hose assembly.
3. Oil seal is damaged or cocked. Replace oil seal around pump shaft.
4. Bleed cylinders.
5. Consult Lift Manufacturer.
6. Check vehicle weight. Compare weight of vehicle to weight limit of the lift.
7. Flush release valve. Hold release handle down and start unit allowing it to run for 15 seconds.
8. Replace with new part.
9. Return unit for repair.
10. Check if motor is wired correctly. Compare wiring of motor to electrical diagram on power unit drawing.
11. Inlet screen clogged. Clean inlet screen or replace.
12. Check wall outlet voltage and wiring. Make sure unit and wall outlet is wired properly.

LIFT WILL NOT STAY UP

POSSIBLE CAUSE

1. Air in oil, (1,2,3)
2. Check valve leaks, (6)
3. Cylinders leak internally, (7)
4. Lowering valve leaks, (4,5,1,7,6)
5. Leaking fittings, (8)

REMEDY INSTRUCTION

1. Check oil level. The oil level should be up to the bleed screw in the reservoir with the lift all the way down.
2. Oil seal is damaged and cocked. Replace oil seal around pump shaft.
3. Bleed cylinder.
4. Flush release valve. Hold release handle down and start unit allowing it to run for 15 seconds.
5. Replace with new valve.
6. Return unit for repair.
7. Consult Lift Manufacturer.
8. Check complete hydraulic system for leaks. Tighten all hydraulics fittings and inspects all hoses.

WARRANTY INFORMATION

TWO POST SURFACE MOUNTED AUTO LIFT

DELIVER THESE INSTRUCTIONS TO THE LIFT OWNER !

READ THIS ENTIRE MANUAL BEFORE INSTALLATION & OPERATION BEGINS.

RECORD HERE THE LIFT AND POWER UNIT INFORMATION WHICH IS LOCATED ON THE SERIAL NUMBER DATA PLATES ON THE LIFT AND ON THE POWER UNIT

Power Unit Model # _____

Power Unit Date Of Mfg. _____

Power Unit Serial # _____

Max Operating Pressure 2750 PSI

This information is required when calling for parts or warranty issues.

PRODUCT WARRANTY

Dannmar Lifts are covered under warranty for three years on equipment structure, to be free of defects in material and workmanship. Power units, hydraulic cylinders, and all other assembly components such as cables, chains, valves, switches etc. are covered under warranty for one year against defects in material or workmanship under normal use. Dannmar Worldwide shall repair or replace at their option for the warranty period those parts returned to the factory freight prepaid which prove upon inspection to be defective.

The warranty does not extend to:

- Defects caused by ordinary wear, abuse, misuse, shipping damage, improper installation, voltage or lack of required maintenance;
- Damages resulting from purchaser's neglect or failure to operate product instructions provided in the owner's manual (s) and / or other accompan
- Normal wear items or service normally required to maintain the product in a safe operating condition;
- Any component damaged in shipment;
- Other items not listed but may be considered general wear parts;
- Damage caused by rain, excessive humidity, corrosive environments or other contaminants.

This warranty is exclusive and in lieu of all other warranties expressed or implied. In no event shall the manufacturer be liable for special, consequential or incidental damages for the breach or delay in performance of the warranty.
The manufacturer reserves the right to make design changes or add improvements to its product line without incurring any obligation to make such changes on product sold previously. Warranty adjustments within the above stated policies are based on the model and serial number of the equipment. This data must be furnished with all warranty claims.

Extended Warranty Available at
http://www.dannmar.com/warranty.asp

MAINTENANCE RECORDS

GENERAL DISCLAIMER

In addition to all claims listed on each of the following individual WARRANTY pages, the following GENERAL DISCLAIMERS apply.

1. The purchaser of any DANNMAR product (Buyer) assumes the risk of verifying all materials or resources used or relied on. In no event will DANNMAR be liable to the Buyer or to anyone else for any decision made or action taken in reliance on information obtained from any DANNMAR website or from any DANNMAR dealer, or third-party website, or any online or published catalog.

2. DANNMAR has exclusive title and ownership rights including all intellectual property right throughout the world for all material and content contained on any DANNMAR website or from any DANNMAR online or published catalog.

3. DANNMAR warrants that all products shown on any DANNMAR website or in any online or published catalog conform to DANNMAR published specifications only and are free from defects in material or workmanship as more fully set forth in the Warranty for the specific product.

4. DANNMAR websites may contain hypertext or other links to websites not owned or controlled by DANNMAR. Links to other computer systems or websites are not supervised nor regularly reviewed by DANNMAR. DANNMAR specifically disavows legal responsibility for any information, personal opinions, guidance, advice or instruction that a Buyer receives from others or other websites.

5. Materials, design, specifications, images and other content from any DANNMAR website, or any other DANNMAR affiliate or dealer website, or any DANNMAR online or published catalog are subject to change. DANNMAR takes no responsibility for improper use or any results therof. DANNMAR reserves the right to make changes to all published warranties, website content, or published content without incurring any obligation to notify the Buyer or public that changes were made.

6. DANNMAR products are provided and sold as is without any express or implied warranties including warranties of merchantability or fitness for particular purpose, other than the published written limited Warranty for the specific product or as required by law.

7. DANNMAR makes no promises, guarantees or assurances that our products meet any state, county, federal or international mandated permit, license, code, standard, certification, or any other mandate other than what is listed or shown on DANNMAR website(s), or any DANNMAR online or published catalog. Not all DANNMAR lift models meet the standards as prescribed by ANSI/ALI ALCTV-(current edition) or ANSI/UL 201. Consult www.autolift.org for a complete list of lift models that meet ANSI/ALI ALCTV-(current edition) or ANSI/UL 201, or contact DANNMAR via contact@dannmar.com. Buyer assumes full responsibility for any state, county, federal or international mandated permit, license, code, standard, certification, or any other mandate required related to the installation and/or operation at any DANNMAR product. DANNMAR will not be responsible for any charges, fines, liens, or other levies imposed on the Buyer related to any special or regional structural, seismic or any other building code and/or codes such as the Uniform Building Code (UBC), International Building Code (IBC) or any other state, county, federal or international mandated permit, license, code, standard, certification, or other mandate, law, rule, regulation or directive by any other agency, government, administrations, or corporations whether state, county, federal, or international mandated.

8. In no event will DANNMAR be liable for any special, incidental, or consequential damages based on breach of warrant, breach of contract, negligence, strict tort, or any other legal theory. Damages that DANNMAR will not be responsible for include, but are not limited to: loss of profits; loss of savings or revenue; loss of use of the product or any associated equipment; cost of capital; cost of any substitute equipment, facilities, or services; downtime; the claims of third parties, including customers; and injury to property. This limitation does not apply to damages caused by breach of the warranty of title and against infringements or to claims for personal injury.

9. Unless modified in a writing signed by both parties, it is understood that DANNMAR published Warranties and

DANNMAR Terms and conditions of Sale are to be the complete and exclusive agreement (Agreement) between the parties superseding all oral or written prior agreements and all other communications between the parties relating to the subject matter of said Agreement, including statements made by sales persons. No employee of DANNMAR or any other party is authorized to make any warranty in addition to those made in the Agreement. The buyer is warned, therefore, to check all Warranties and review in full detail the Terms and Conditions of Sale carefully to see that it correctly reflects those terms that are important to the Buyer.

10. The Agreement allocates the risks of product failure between DANNMAR and the buyer. This allocation is recognized by both parties and is reflected in the price of the goods. Buyer acknowledges that they have read and fully understand the Agreement, and are bound by its terms. Some States do not allow limitations on how long an implied warranty lasts, so the above limitation may not apply to some Buyers. This warranty gives the Buyer specific legal rights. The Buyer may have other rights also which vary from State to State.

11. ANY ACTION FOR BREACH OF WARRANTY MUST BE COMMENCED WITHIN 60-DAYS FOLLOWING EXPIRATION DATE OF ANY WARRANTY PROVISION OR TERM.

LIMITED WARRANTY - TWO-POST LIFTS/FOUR-POST LIFTS

Better Products - Better Service - Better Value

Duration: From the date of purchase by original Purchaser or 36/12 months from the date of shipment by DANNMAR or whichever comes first.

✓ **Three Years (36-Months) Warranty** on the lift structure
✓ **One Year (12-Months) Warranty** on operating components

Limited Warranty

1. Who offers this warranty (Warrantor): DANNMAR Inc., 646 Flinn Ave. Moorpark, CA 93021
2. Who receives this warranty (Purchaser): The original Purchaser (other than for purpose of resale)
3. What products are covered by this warranty: Any DANNMAR Two-Post or Four-Post Vehicle Service Lift.
4. What is covered under this warranty: manufacturer defects due to material and/or workmanship with the exceptions noted below.
5. What is not covered under this warranty:
   a. Any failure that results from Purchaser's abuse, neglect or failure to install, operate, maintain or service product in accordance with instructions provided in the owner's manual(s) supplied
   b. Any damage caused by overloading lift beyond rated capacity
   c. Items or service normally required to maintain the product, i.e. lubricants, oil, etc.
   d. Items considered general wear parts such as rubber pads, lifting cables, etc. unless wear or failure is a direct result of manufacturer defect due to material and/or workmanship
   e. Any component damaged in shipment or any failure caused in whole or in part by installing or operating lift under conditions not in accordance with installation and operation guidelines or damaged by contact with tools or surroundings
   f. Motor or pump failure caused by rain, excessive humidity, corrosive environments or other contaminants
   g. Rusted components due to improper maintenance or corrosive environments
   h. Cosmetic defects that do not interfere with product functionality
   I. Damage due to incorrect voltage or improper wiring
   j. Any incidental, indirect, or consequential loss, damage, or expense that may result from any defect, failure, or malfunction of DANNMAR Inc. product
   k. All electrical components (excluding power unit) are guaranteed for one year against defects in workmanship and/or materials when the lift is installed and used according to specifications.
   l. The cost of labor to make repairs or replacements.
   m. Shipping costs.
6. Responsibilities of Warrantor under this warranty: Repair or replace, at Warrantor's option, component which is defective, has malfunctioned and/or failed to conform within duration of the warranty period. DANNMAR will not pay labor costs.
7. Responsibilities of Purchaser under this warranty:
   a. Provide dated proof of purchase and maintenance records
   b. In some cased, components may be required to be shipped to the nearest DANNMAR Authorized Service center. Freight costs must be borne by the Purchaser
   c. Use reasonable care in the installation, operation and maintenance of the products as described in the owner's manual(s).
8. When Warrantor will perform repair or replacement under this warranty: Repair or replacement will be scheduled and serviced according to the normal work flow at the servicing location, and depending on the availability of replacement parts.
9. The warranty will be voided if the product is not installed in accordance with the instructions provided by Dannmar.
10. This Warranty is further limited by DANNMAR'S General Disclaimer and Terms and Conditions of Sale.

Limitation of Liability

DANNMAR shall have no obligation pursuant to this Warranty with respect to products which in our sole judgment have been altered damaged, misused, abused , badly worn, lost or improperly installed or maintained. This Warranty is null and void if the customer or any other person other than an authorized representative of DANNMAR has made any attempt to service or modify the tool prior to its return to DANNMAR under this Warranty. In no event will either party be liable for any damage caused by the other party's failure to fulfill its responsibilities, under these terms and conditions. In no event will either party be liable for any lost profits, lost savings, incidental damage, or other economic consequential damages. **DANNMAR products are provided and sold as is without any express or implied warranties including warranties of merchantability or fitness for particular purpose.** No warranties, expressed or implied, will apply after the period set forth in this Limited Warranty. DANNMAR may modify these terms and conditions at any time by either providing the customer with written notice or posting such revised terms on www.DANNMAR.com. Such revised terms shall be effective thirty days from the date of such written notice or posting.

Some other great Dannmar products that may interest you:

Dannmar Tripod Stand

2-Ton capacity
Minimum height: 68.7"
Maximum height: 78.7"

Rolling Work Seat

Capacity (each): 250 lbs. / 113.4 kg.
Depth: 14.5" / 368.3 mm.
Overall Height: 14" / 355.6 mm.

Dannmar 20-Gal Oil Drain

Working pressure: 10 PSI
Height adjusts from 45" - 72.5"
8' evacuation hose

Dannmar 8-Gal Oil Drain

Minimum height: 48"
Max Height: 67"
Wide drain pipe drains oil quickly

Dannmar Round Lift Pad

For use with Dannmar 2-Post lifts. Sold as pad-only or with full assembly

Frame Cradle Pad

Sturdy steel construction
Tactile rubber mat reduces slippage and protects finish

Dannmar Hose Reel

Includes 50 ft of 3/8" rubber hose.
Working Pressure: 250 PSI
Max CFM: 25

Dannmar Transmission Jack

Min Adjustable Height: 34" / 863.6 mm
Max Adjustable Height: 71" / 1803.4 mm
First Stage Capacity: 1,000 lbs / 453.59 kg

Please call 877-432-6627 for more information.

Visit our “Where to Buy” page at dannmar.com for a full list of our distributors.

FOR PARTS OR SERVICE CONTACT:

Dannmar Equipment, Inc.
646 Flinn Ave, Suite A
Moorpark, CA 93021
Tel: 1-844-629-5291
Fax: 1-805-530-1909

www.dannmar.com

ALTHOUGH EVERY EFFORT HAS BEEN TAKEN TO ENSURE COMPLETE AND ACCURATE INSTRUCTIONS HAVE BEEN INCLUDED IN THIS MANUAL, POSSIBLE PRODUCT UPDATES, REVISIONS AND OR CHANGES MAY HAVE OCCURRED SINCE THE PRINTING OF THIS MANUAL. DANNMAR EQUIPMENT RESERVES THE RIGHT TO CHANGE SPECIFICATIONS WITHOUT INCURRING ANY OBLIGATION FOR EQUIPMENT PREVIOUSLY OR SUBSEQUENTLY SOLD. DANNMAR EQUIPMENT IS ALSO NOT RESPONSIBLE FOR TYPOGRAPHICAL ERRORS.