INSTALLATION INSTRUCTIONS

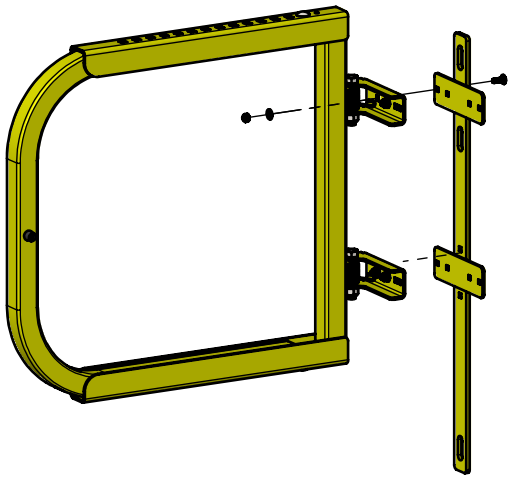

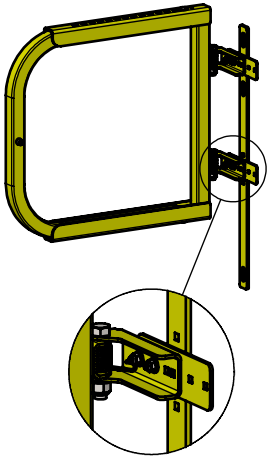

RH HINGE
CONFIGURATION

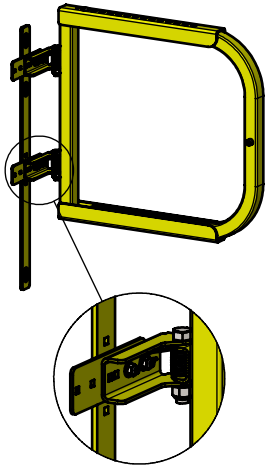

LH HINGE
CONFIGURATION

STEP 1:

- ATTACH POST BRACKET TO DOOR HINGES
- REVERSE DOOR MOUNTING TO SWITCH SWING DIRECTION

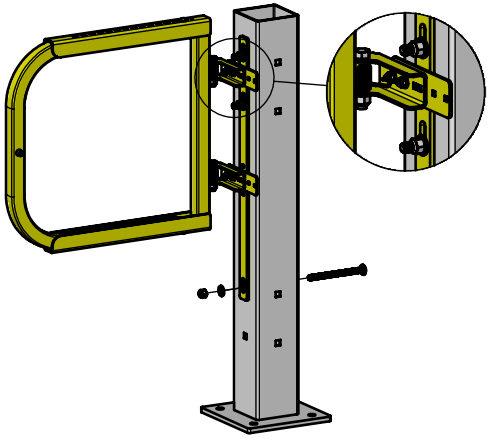

STEP 2:

ATTACH DOOR ASSEMBLY TO POST

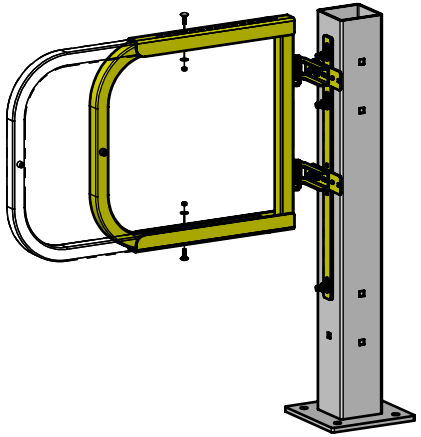

STEP 3:

ADJUST DOOR WIDTH

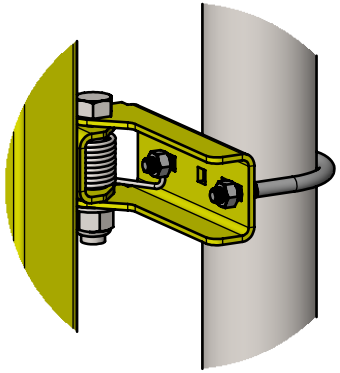

BONUS:

ATTACH DOOR TO A ROUND POST USING A 2" U-BOLT (NOT INCLUDED)

3rd Angle	SIZE: A	IDEAL WAREHOUSE INNOVATIONS INC

DESCRIPTION:
GUARDRAIL GATE INSTALL INSTRUCTIONS

SCALE:	SHEETS:	DRAWING NUMBER:	REV:
1:20	1 of 1	60-7450-INS.Guardrail Gate	0