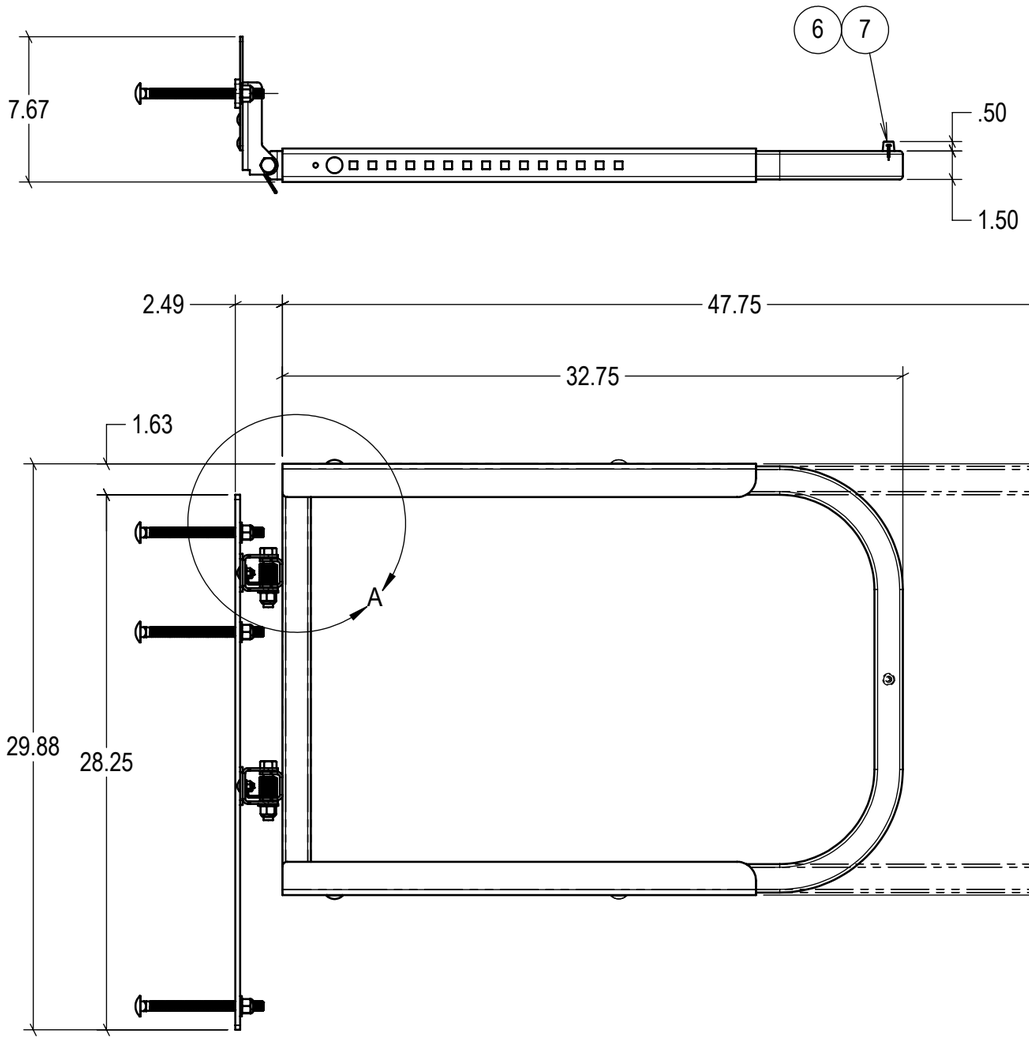

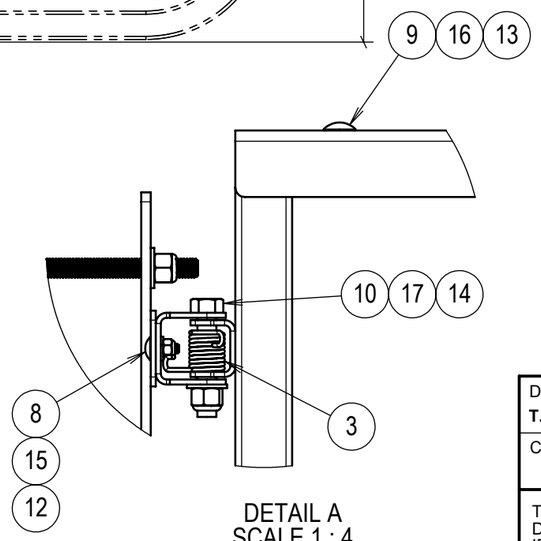

DETAIL A
SCALE 1 : 4

ITEM NO.	PART NUMBER	DESCRIPTION	QTY.
1	60-7480-0101	HINGE BRACKET	2
2	60-7480-0102	SQUARE COLUMN BRACKET	1
3	60-7480-0103	GATE TORSION SPRING	2
4	60-7480-4901	BASE DOOR WELDMENT, 33/48	1
5	60-7480-4902	U-FRAME, 33/48	1
6	90203A253	ROUND HEAD SELF-TAPPING SCREW, #6 x 3/4"	1
7	9540K911	BUMPER	1
8	90185A540	CARRIAGE BOLT, 1/4"UNC x 3/4"LG, GR.5	4
9	90185A624	CARRIAGE BOLT, 3/8"UNC x 1"LG, GR.5	2
10	91247A723	HEX BOLT, 1/2 UNC x 2 3/4; Gr5, ZP	2
11	93548A737	CARRIAGE BOLT, 1/2UNC x 6-1/2"	3
12	95615A120	LOCKNUT, 1/4 UNC; Gr5, ZP	4
13	95615A140	LOCKNUT, 3/8 UNC; Gr5, ZP	2
14	95615A210	LOCKNUT, 1/2 UNC; Gr5, ZP	5
15	98023A029	WASHER, FLAT, 1/4"; ZP	4
16	98023A031	WASHER, FLAT, 3/8"; ZP	2
17	98023A033	WASHER, FLAT, 1/2"; ZP	5

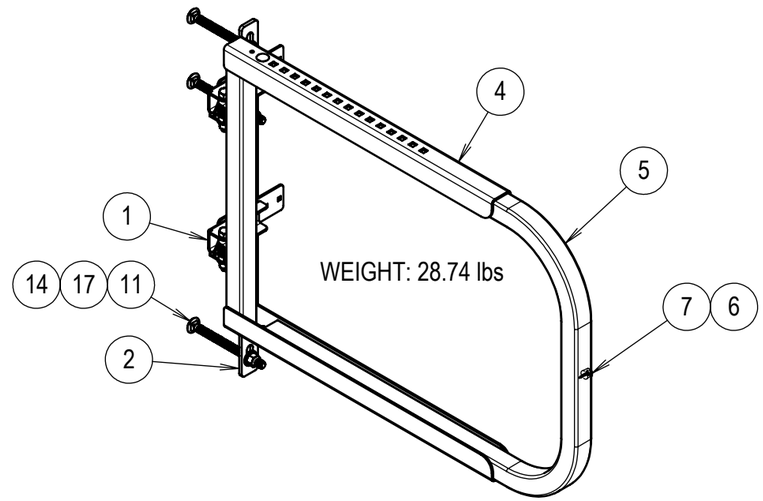

DRAWN BY: T.CHUNG	DATE: 2020-08-24
CHECKED BY:	DATE:

THE INFORMATION CONTAINED IN THIS DRAWING IS THE SOLE PROPERTY OF IDEAL WAREHOUSE INNOVATIONS INC. ANY REPRODUCTION IN PART OR AS A WHOLE IS PROHIBITED.

3rd Angle | SIZE: B | IDEAL WAREHOUSE INNOVATIONS INC

DESCRIPTION: **GATE ASSEMBLY, 33"-48"**

SCALE:	SHEETS:	DRAWING NUMBER:	REV:
1:8	1 of 1	60-7480-4900-A	2