INSTALLATION NOTES

INSPECT THE SITE AND ENSURE ALL PARTS ARE PRESENT

CLEAN THE AREA OF ANY DEBRIS BEFORE INSTALLING GUARDRAILS AND ACCESSORIES

SAFETY PRECAUTIONS

USE APPROPRIATE PERSONAL PROTECTIVE EQUIPMENT SUCH AS GLOVES, SAFETY GLASSES, HEARING PROTECTION AND PROTECTIVE SHOES.

ANCHOR BOLTS

THE SUPPLIED ANCHOR BOLTS REQUIRE AN MINIMUM EMBEDDED DEPTH OF 2-3/4"

TIGHTEN THE NUT TO THE INSTALLATION TORQUE OF 80 ft/lbf [108 N-m]

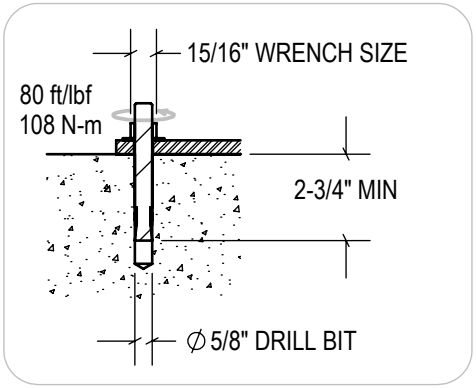

TOOLS REQUIRED FOR INSTALLATION

- MEASURING TAPE
- CHALK LINE
- 2FT LEVEL
- HAMMER DRILL WITH A 5/8" DRILL BIT
- 15/16" SOCKET WRENCH AND/OR ADJUSTABLE WRENCH

3rd Angle	SIZE: A	IDEAL WAREHOUSE INNOVATIONS INC
DESCRIPTION: GUARDRAIL SYSTEMS INSTALLATION		
SCALE: 1:16	SHEETS: 1 of 1	DRAWING NUMBER: INS-01.625-R0

INSTALLATION INSTRUCTIONS

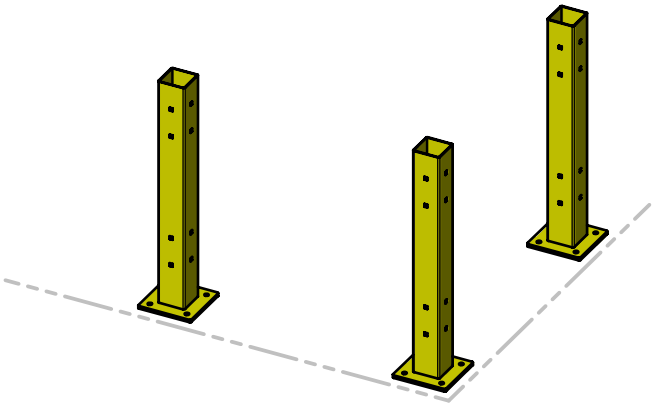

STEP 1:

- POSITION POSTS IN THE DESIRED LOCATION
- MEASURE AND MARK LAYOUT
- DO NOT LAG POSTS TO THE FLOOR

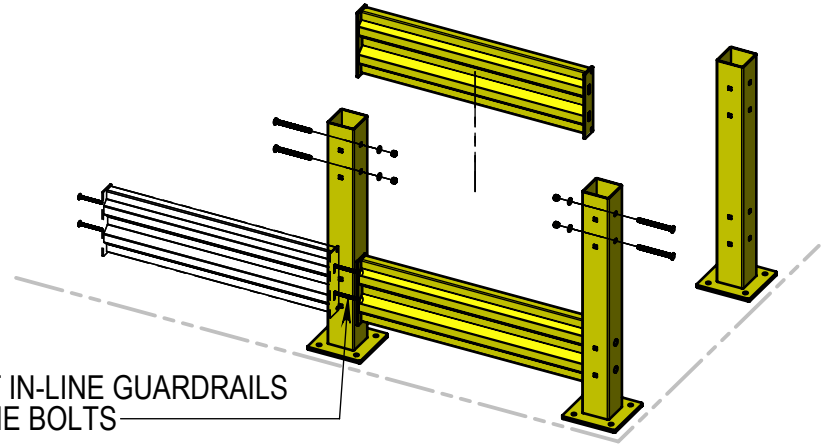

STEP 2:

ATTACH THE RAILS TO THE BRACKETS

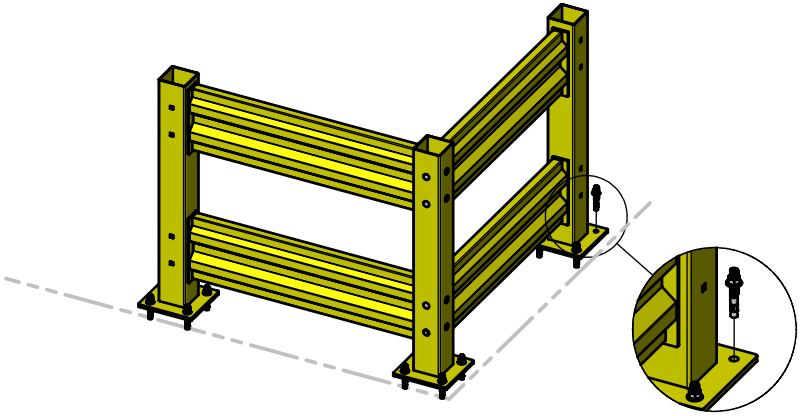

STEP 3:

- CHECK THE POSITION OF THE POSTS AND RAILINGS TO ENSURE SQUARENESS & ALIGNMENT
- IF SATISFIED, LAG POSTS TO THE FLOOR USING THE PROVIDED ANCHORS AND SPECIFICATIONS

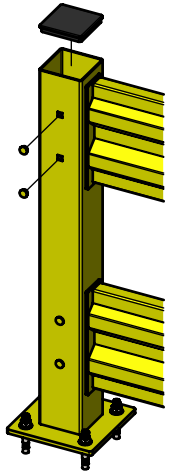

STEP 4:

- ADD POST CAPS & PLUGS
- ADD ROUND POST PLUGS TO UNUSED SQUARE HOLES BY GENTLY PUSHING INTO PLACE

3rd Angle	SIZE: A	IDEAL WAREHOUSE INNOVATIONS INC
DESCRIPTION: GUARDRAIL INSTALLATION		
SCALE: 1:32	SHEETS: 1 of 1	DRAWING NUMBER: 60-7450-INS.Guardrail / REV: 0

INSTALLATION INSTRUCTIONS

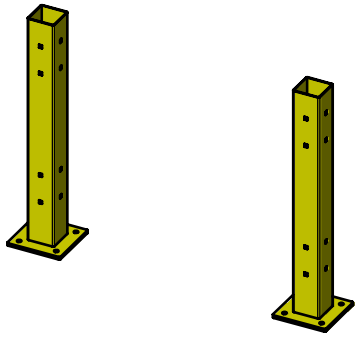

STEP 1:

- POSITION POSTS IN THE DESIRED LOCATION
- MEASURE AND MARK LAYOUT
- DO NOT LAG POSTS TO THE FLOOR

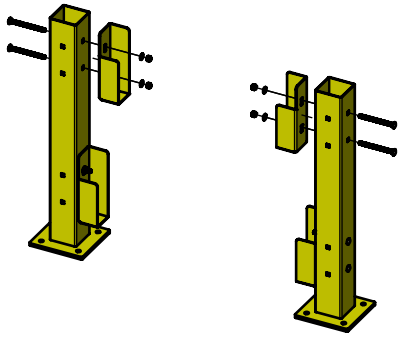

STEP 2:

ATTACH THE LIFTOUT BRACKETS TO THE POSTS

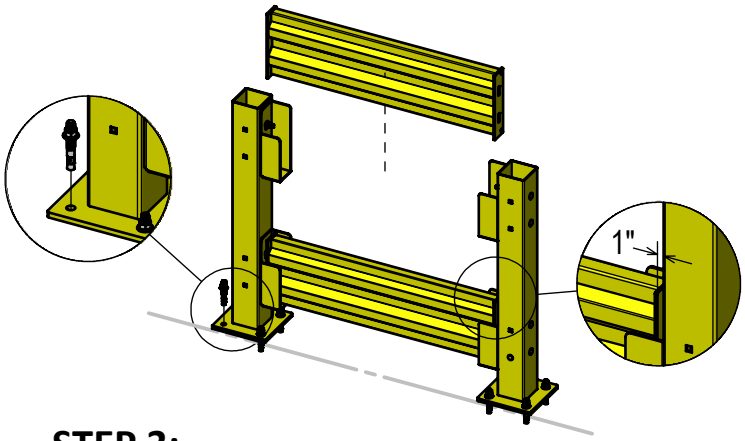

STEP 3:

- INSERT GUARDRAIL INTO BRACKETS
- 1" CLEARANCE BETWEEN RAIL AND POST AT BOTH ENDS IS RECOMMENDED
- CHECK THE POSITION OF THE POSTS AND RAILINGS TO ENSURE SQUARENESS & ALIGNMENT
- IF SATISFIED, LAG POSTS TO THE FLOOR USING THE PROVIDED ANCHORS AND SPECIFICATIONS

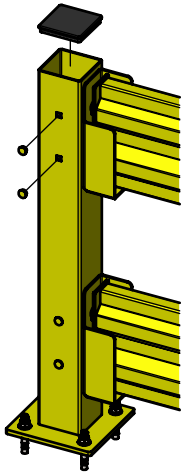

STEP 4:

- ADD POST CAPS & PLUGS
- ADD ROUND POST PLUGS TO UNUSED SQUARE HOLES BY GENTLY PUSHING INTO PLACE

3rd Angle	SIZE: A	IDEAL WAREHOUSE INNOVATIONS INC

DESCRIPTION:

GUARDRAIL LIFTOUT BRACKET INSTALLATION

SCALE:	SHEETS:	DRAWING NUMBER:	REV:
1:32	1 of 1	60-7450-INS.Guardrail Liftout	0

INSTALLATION INSTRUCTIONS

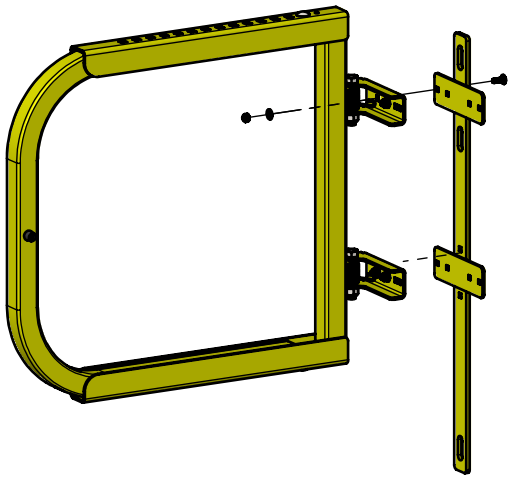

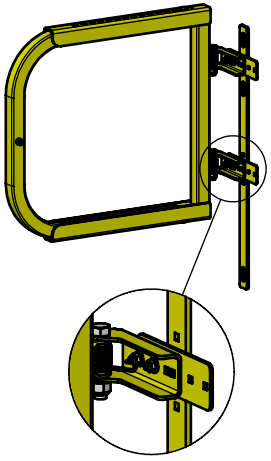

RH HINGE
CONFIGURATION

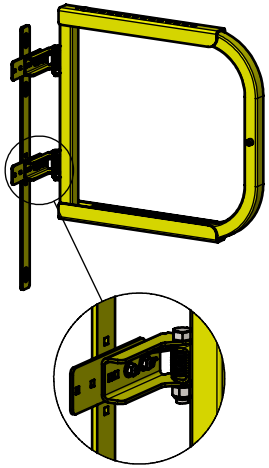

LH HINGE
CONFIGURATION

STEP 1:

- ATTACH POST BRACKET TO DOOR HINGES
- REVERSE DOOR MOUNTING TO SWITCH SWING DIRECTION

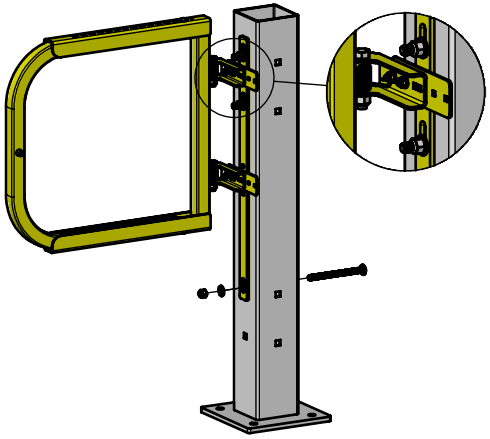

STEP 2:

ATTACH DOOR ASSEMBLY TO POST

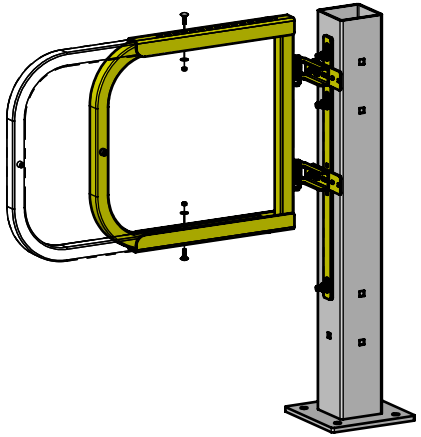

STEP 3:

ADJUST DOOR WIDTH

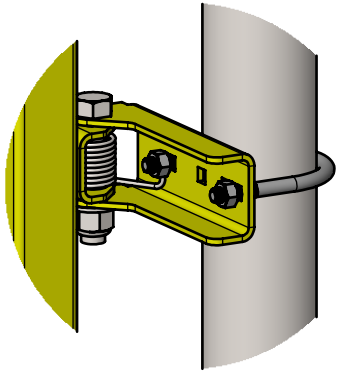

BONUS:

ATTACH DOOR TO A ROUND POST USING A 2" U-BOLT (NOT INCLUDED)

3rd Angle	SIZE: A	IDEAL WAREHOUSE INNOVATIONS INC

DESCRIPTION:
GUARDRAIL GATE INSTALL INSTRUCTIONS

SCALE:	SHEETS:	DRAWING NUMBER:	REV:
1:20	1 of 1	60-7450-INS.Guardrail Gate	0