DOCKLITE HEAD SPECIFICATIONS: DL-LED-LH

- CONSTRUCTION: HIGH TEMP POLYMER HOUSING; ZINC-PLATED STEEL WIRE GUARD
- MOUNTING: ZINC-PLATED HARP
- WIRING: RECESSED 3-PRONG IEC (C-14) TYPE PLUG WITH 16 INCH LENGTH CORD
- ACCOMMODATES UP TO 50W PAR38 SELF-BALLASTED LED LAMP
  - INCLUDES PAR38 18W LED LAMP

DOCKLITE HEAD COMPLIANCES

- UL/cUL TO UL153: PORTABLE WORK LIGHT SUITABLE FOR DRY LOCATIONS

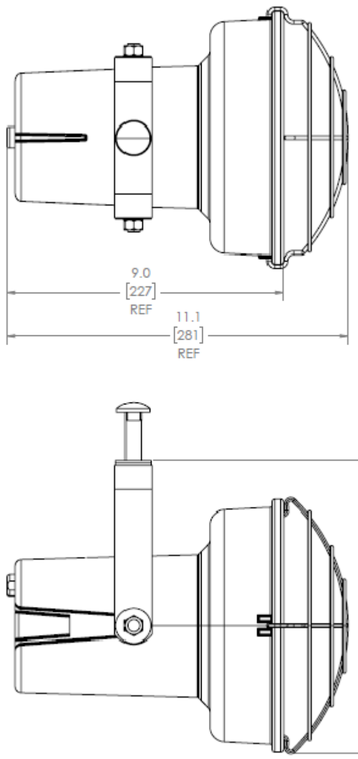

40 INCH ARM

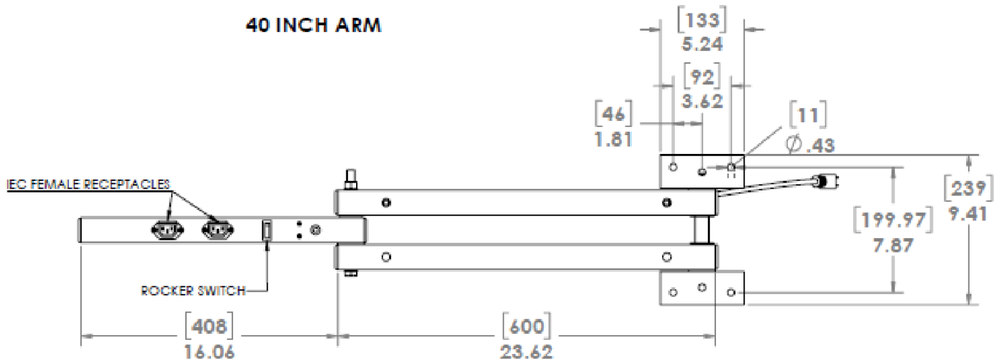

60 INCH ARM

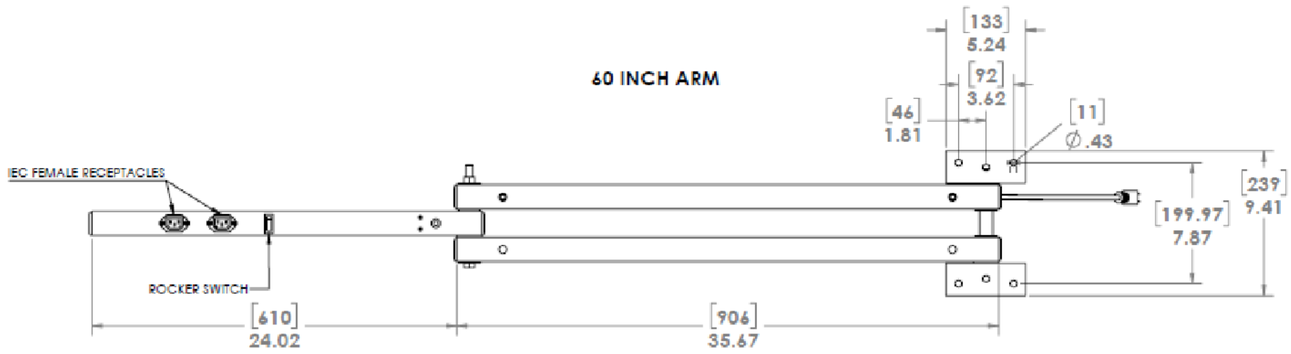

DOUBLE STRUT DOCKLITE ARM SPECIFICATIONS

- CONSTRUCTION: 1.60 INCH SQUARE STEEL TUBE ARMS WITH LATERAL MOBILITY JOINT
- MOUNTING: POWDER COATED STEEL BRACKET
- WIRING: 120 VAC; ON-OFF ROCKER SWITCH AND TWO IEC TYPE RECEPTACLES (ACCOMODATE HEAD AND FAN)
- FINISH: SAFETY YELLOW POWDER COAT
- AVAILABLE IN 40 AND 60 INCH DOUBLE STRUT
- CABLE: 72 INCH CORD WITH NEMA 5-15 PLUG

DOCKLITE ARM COMPLIANCES

- ETL/cETL TO UL1598 SUITABLE FOR DAMP LOCATIONS
- CSA C22.2 No. 250 EQUIVALENT

PRODUCT DESCRIPTIONS

ITEM NO.	DESCRIPTION	IDEAL WAREHOUSE PART NO.	PACKAGED WEIGHT (LBS)
010176.101	DL-LED-LH-LMP/DLSD-40-ARM-DS-IW	60-5483-550	18.6
010176.110	DL-LED-LH-LMP/DLSD-60-ARM-DS-IW	60-5483-600	23.8

RELEASE NO.	REV.	DESCRIPTION	BY	CKD.	DATE
PCN 24-093	D	CHANGE DL-INC-LH TO DL-LED-LH. UPDATED DIMENSIONS AND DESCRIPTIONS.	JSD	EJM	8/9/2024
PCN 24-063	C	CUSTOMER ARM DESIGN CHANGE	EJM	JSD	6/6/2024
PCN 23-046	B	UPDATED LAMP SPECIFICATION			6/26/2023
XX		FOR CUSTOMER REFERENCE	CDR	JSD	12/20/2022

PHOENIX® DURABILITY X DESIGN™

MILWAUKEE, WI, USA.

TOLERANCES ARE AS FOLLOWS:
.X ± .060"
.XX ± .030"
.XXX ± .015"
HOLES +.006" -.001"
ANGLES ± 1°
RADII .030"

NOTES: UNLESS OTHERWISE SPECIFIED DIMENSIONS ARE IN INCHES.
ALL EDGES TO BE DEBURRED.
DO NOT SCALE DRAWING.

PROPRIETARY AND CONFIDENTIAL
THE INFORMATION CONTAINED IN THIS DRAWING IS THE SOLE PROPERTY OF PHOENIX PRODUCTS, INC. ANY REPRODUCTION IN PART OR AS A WHOLE WITHOUT THE WRITTEN PERMISSION OF PHOENIX PRODUCTS, INC. IS PROHIBITED.

DL-LED-LH-LMP / DLSD-XX-ARM-DS-IW

THIRD ANGLE PROJECTION

DRN.	CKD.	DATE
CDR	JSD	

DWG. NO. 010176.101D

SHEET 1 of 1