INDOOR/OUTDOOR

KEROSENE PORTABLE FORCED AIR HEATERS

USER'S MANUAL AND OPERATING INSTRUCTIONS

Dyna-Glo PRO

Dyna-Glo PRO ECOMAX

DYNA-GLO DELUX™

DYNA-GLO DELUX™ ECOMAX™

Dyna-Glo™ WORKHORSE SERIES

C SA® US

COMPLIES WITH UL733 AND ANSI A10.10-1998 CAN/CSA/ B140.0-03 AND CSA B140.8-1967

Before the first use of this heater, please read this USER'S MANUAL very carefully. This USER'S MANUAL has been designed to instruct you as to the proper manner in which to assemble, maintain, store, and most importantly, how to operate the heater in a safe and efficient manner. Please keep this manual for future reference.

CONSUMER : Retain this manual for future reference.

Questions, problems, missing parts? Before returning to your retailer, call our customer service department at 877-447-4768 8:30 a.m. - 4:30 pm CST, Monday - Friday. or email us at customerservice@ghpgroupinc.com

NEVER LEAVE THE HEATER UNATTENDED WHILE BURNING

⚠ DANGER: IMPROPER USE OF THIS HEATER CAN RESULT IN SERIOUS INJURY OR DEATH FROM BURNS, FIRE, EXPLOSION, ELECTRICAL SHOCK AND/OR CARBON MONOXIDE POISONING.

⚠ WARNINGS:

1. RISK OF INDOOR AIR POLLUTION!

- **Use this heater only in well ventilated areas.** Provide at least a three-square foot (2,800 sq. cm.) opening of fresh outside air for each 100,000 BTU/hr. of heater rating.
- People with breathing problems should consult a physician before using the heater.
- **Carbon monoxide poisoning:** Early signs of carbon monoxide poisoning resemble the flu, with headaches, dizziness and/or nausea. If you have these signs, the heater may not be working properly.
  Get fresh air at once! Have the heater serviced. Some people are more affected by carbon monoxide than others. These include pregnant women, persons with heart or lung disease or anemia, those under the influence of alcohol, or those at high altitudes.
- Never use this heater in living or sleeping areas.

2. RISK OF BURNS / FIRE / EXPLOSION!

- **NEVER** use any fuel other than 1-K kerosene, #1/#2 disel/fuel oil, JET A or JP-8 fuels in this heater.
- **NEVER** use use fuel such as gasoline, benzene, paint thinners or other oil compounds in this heater. **(RISK OF FIRE OR EXPLOSION)**
- **NEVER** use this heater where flammable vapors may be present.
- **NEVER** refill the heaters fuel tank while heater is operating or is still hot.

⚠ CAUTION: Hot while in operation. Do not touch. Keep children, clothing and combustibles away from heater.

Minimum Clearances: Outlet: 8 feet (250cm) / Sides, top and rear: 4 feet (125cm)

- **NEVER** block air inlet (rear) or air outlet (front) of heater.
- **NEVER u**se duct work in front or behind of heater.
- **NEVER** move or handle heater while it is hot, operating, or plugged in.
- **NEVER** transport heater with fuel in it's tank.
- When used with an optional thermostat or if equipped with a thermostat, heater may start at any time.
- **ALWAYS** locate heater on a stable and level surface.
- **ALWAYS** keep children and animals away from heater.
- Bulk fuel storage should be a minimum of 25 ft. from heaters, torches, portable generators or other sources of ignition. All fuel storage should be in accordance with federal, state or local authorities having jurisdiction.

3. RISK OF ELECTRIC SHOCK!

- Use only the electrical power (voltage and frequency) specified on the model plate of the heater.
- Use only a three-prong, grounded outlet and extension cord.
- **ALWAYS** install the heater so that it is not directly exposed to water spray, rain, dripping water or wind.
- **ALWAYS** unplug the heater when not in use.

⚠WARNING: This product and the fuel used to operate this product (kerosene or other approved fuels), and the products of combustion of such fuel, can expose you to chemicals including benzene, which is known to the State of California to cause cancer and reproductive harm.
For more information go to www.p65Warnings.ca.gov

MASSACHUSETTS RESIDENTS: Massachusetts state law prohibits the use of this heater in any building which is used in whole or in part for human habitation. Use of this heating device in Massachusetts requires local fire dept. permit (M.E.L.C. 148, Section 10A.)

CANADIAN RESIDENTS: Use of this heater shall be in accordance with authorities having jurisdiction and CSA Standard B139.

NEW YORK CITY RESIDENTS: For use only at construction sites in accordance with applicable NYC codes under NYCFD certificate of approval # 5034 and 5037.

NEVER LEAVE THE HEATER UNATTENDED WHILE BURNING

TABLE OF CONTENTS

Safety Information 1
Introduction 3
Features..... 3
Unpacking..... 4
Assembly 5
Fuel Selection 6
Overview of Heater Design..... 7
Fueling your Heater 7
Operation..... 8
Long term Storage 9
Maintenance..... 9
Troubleshooting Guide..... 11
Wiring Diagram..... 12
Specifications..... 12
Exploded Parts Drawing 13
Parts List..... 14
Warranty..... 19

DETAILED MODEL NUMBER LIST BY SERIES

KFA50	KFA80	KFA135	KFA180	KFA220
KFA50DGD-L	KFA80DGD-L	KFA135DGD-L	KFA180DGD-L	KFA220DGD-L
KFA50DGDR-L	KFA80DGD-LD	KFA135DGD-LD	KFA180DGD-LD	KFA220DGD-LD
KFA50H-L	KFA80DGDR-L	KFA135DGDR-L	KFA180DGDR-L	KFA220DGDR-L
KFA50TH-L	KFA80DGDR-LD	KFA135DGDR-LD	KFA180DGDR-LD	KFA220DGDR-LD
KFA50WH-L	KFA80H-L	KFA135H-L	KFA180H-L	KFA220H-L
	KFA80H-LD	KFA135H-LD	KFA180H-LD	KFA220H-LD
	KFA80TH-L	KFA135TH-L	KFA180TH-L	KFA220TH-L
	KFA80TH-LD	KFA135TH-LD	KFA180TH-LD	KFA220TH-LD
	KFA80WH-L	KFA135WH-L	KFA180WH-L	KFA220WH-L
	KFA80WH-LD	KFA135WH-LD	KFA180WH-LD	KFA220WH-LD

NEVER LEAVE THE HEATER UNATTENDED WHILE BURNING

1. INTRODUCTION

Please read this USER'S MANUAL carefully. It will show you how to assemble, maintain, and operate the heater safely and efficiently to obtain full benefits from its many built-in features.

2. FEATURES

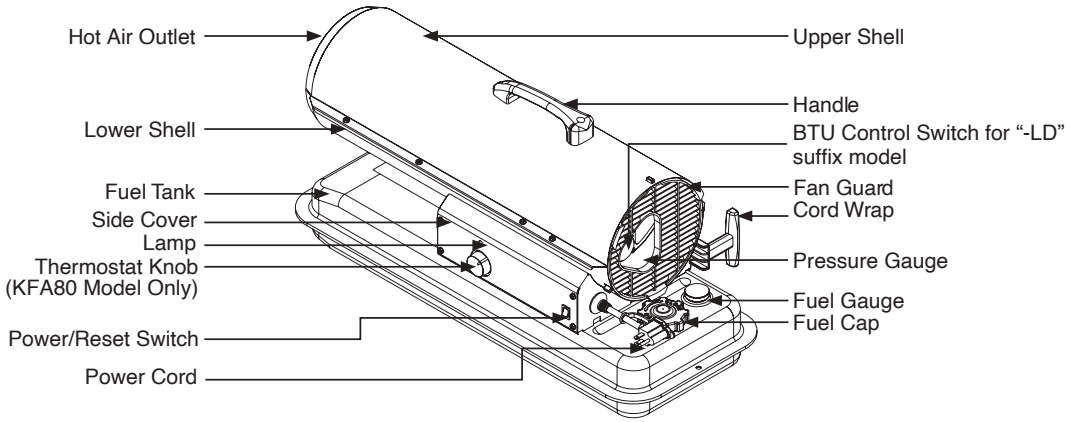

Figure 1. KFA50/80 MODELS

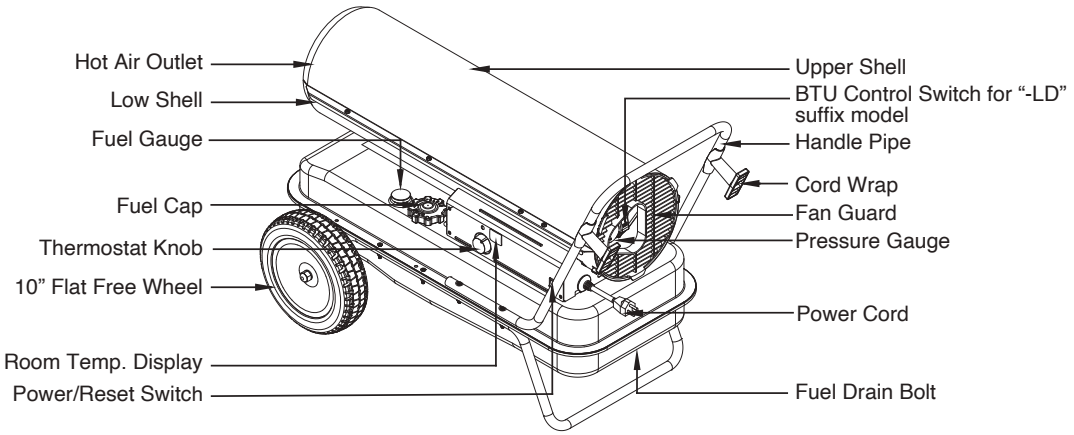

Figure 2. KFA135/180/220 MODELS

3. UNPACKING AND ASSEMBLY

1) REMOVE THE HEATER AND ALL PACKING MATERIALS FROM THE BOX.

NOTE : Save the shipping carton and packing packing materials for future storage.

	KFA50	KFA80	KFA135	KFA180	KFA220
Wheel Support Frame	No	No	Yes	Yes	Yes
Wheel	No	No	Yes	Yes	Yes
Threaded Axle	No	No	Yes	Yes	Yes
Handle-pipe	No	No	Yes	Yes	Yes
Handle	Yes	Yes	No	No	No
Cord Wrap	No	Yes	Yes	Yes	Yes
Hardware kit : HW-KFA1016	No	No	Yes	Yes	Yes

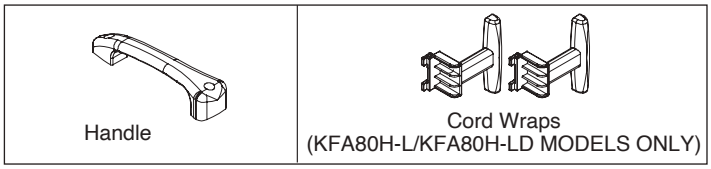

Figure 3. KFA50/80 MODELS

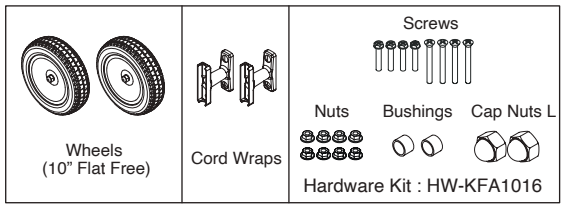

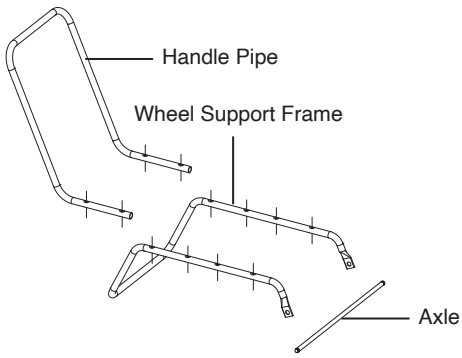

Figure 4. KFA135/180/220 MODELS ONLY

2) ASSEMBLY

ASSEMBLY For KFA50/80 Models only (Assembly time for this product is 3 minutes)

Tools Required

• Medium Phillips Screwdriver

1. Lift front guard for arrow direction and make sure that guard's wedged portion fits into the slit hole on the upper housing.
2. Remove the pre-assembled screws on the shell upper and side cover.
3. Align the holes in the upper housing with two mounting holes on the handle as shown in Figure 6.
4. Secure handle with the screws removed.
5. Insert cord wrap into the rectangle holes on the supporter and align the hole on the cord wrap with the mounting hole on the side cover as shown in Figure 5.
6. Secure cord wrap with the screws removed.

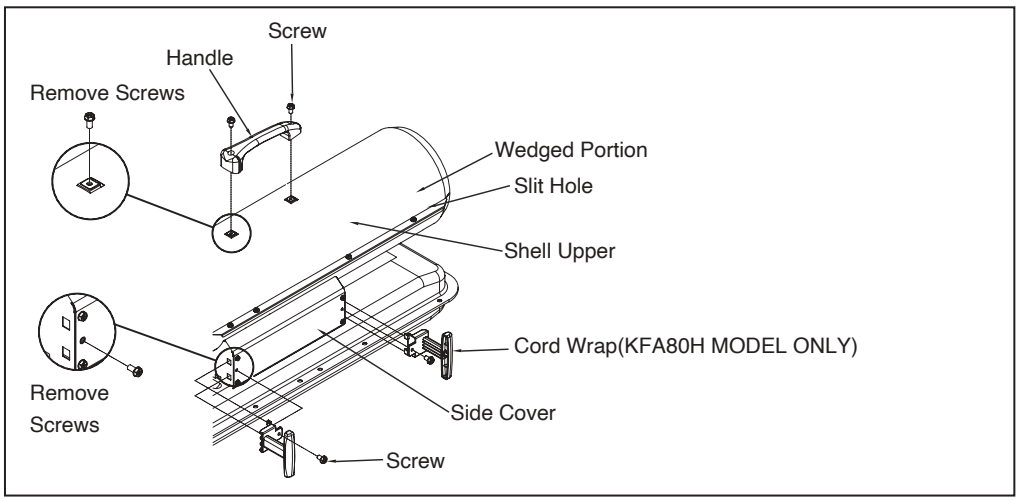

Figure 5. Assembling Handle & Cord Wrap

Assembly For 135/180/220 Models only (Assembly time for this product is 10 minutes)

Tools Required

• Medium Phillips Screwdriver

• 3/4 inch socket or adjustable wrench

1. Slide threaded axle through the rear section of the wheel support frame..
2. Slide one axle bushing on to each side of the axle. Slide one wheel on to each side of the axle. Attach one cap nut on to each side of the threaded axle and tighten well.
3. Place heater on wheel support frame. Align the holes on fuel tank flange with holes on wheel support frame.
4. Position the handles on top of fuel tank flange. Insert screws through handless, fuel tank flange and wheel support frames as show in Figure 6 and attach nut finger tight after each screw is inserted.
5. Align the hole on the handles with the mounting hole on the Cord Wrap. Insert Screws through Cord Wrap, handles and attach nut finger tight after each screw is inserted.
6. Secure cord wrap with the screws removed.

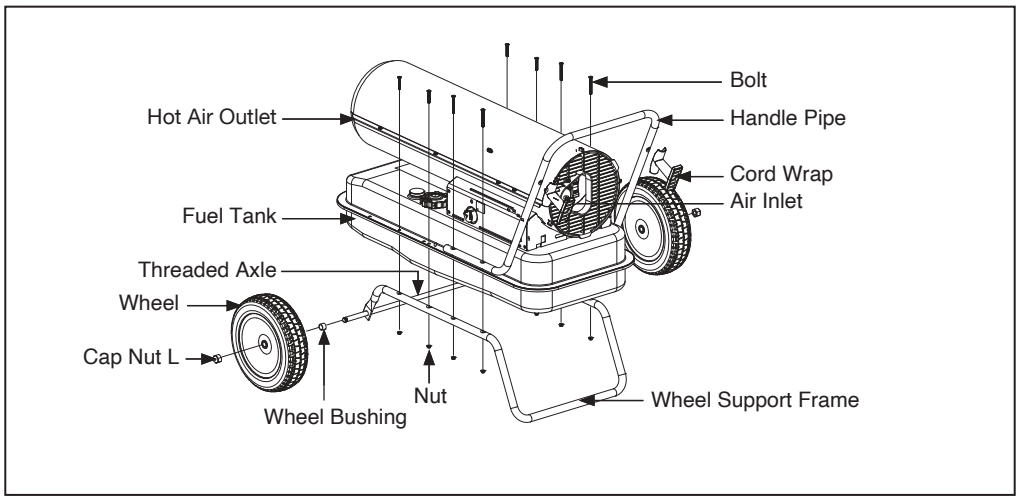

Figure 6. KFA135/180/220 MODELS ONLY

⚠ **CAUTION :** DO NOT OPERATE heater without support frame assembled to tank.
NOTE: Heater should be inspected before each use, and at least annually by a qualified service person.

4. FUEL SELECTION

1. All models can use 7 different fuels: K1 Kerosene, #1 Fuel Oil, #1, Diesel, #2 Fuel Oil, #2 Diesel, Jet A, JP-8
2. K1 Kerosene is recommended for optimal combustion and performance, and for less maintenance. K1 is also the optimal fuel choice in extremely low temperatures of 15°F or less, as its pour-point/"gel-point" varies depending on the refinery, but it is always far below the lowest temperatures reached North America.
3. Jet A and JP-8 are also excellent choices for clean combustion, reduced maintenance, and temperatures below 15°F, but they are rarely found outside of the aviation industry or the military.
4. #1 Fuel Oil, #1 Diesel, #2 Fuel Oil, #2 Diesel are often selected, as they are readily available. However, the user must understand that Fuel Oil and Diesel are less refined, and therefore the user should be aware of the following:
   a. #1 Diesel and #1 Fuel Oil will have some degree of increased smoke/soot during ignition, increased smell, and increased regular cleaning/maintenance.
   b. #2 Diesel and #2 Fuel Oil will, generally depending on the regional refinery, burn dirtier than #1 fuels. The use of #2 fuels will result in a little more smoke/soot during ignition, a greater increase in smell, and will require more regular cleaning/maintenance than #1 fuels.
   c. At temperatures lower than 15°F, most diesel/fuel oil blends will become more viscous (start to gel) as the diesel falls below its pour point (starts to "gel"), and may pose a challenge igniting the heater and with continuous operation of the heater. There are troubleshooting steps for this situation, but selecting K1 (or JP-8/Jet A) is recommended when operating below 15°F. The colder the temperatures the more likely you could problems you will experience diesel gelling.
   d. Diesel fuel gelling happens when the paraffin usually present in diesel starts to solidify when the temperature drops. At 32°F, the wax in liquid form will crystallize and leave the fuel clouded; this can start to have an effect on the fuel filter and the nozzle. If the nozzle is getting coated the spray pattern will not be correct which can cause white smoke and performance problems.

KEROSENE SHOULD ONLY BE STORED IN A BLUE CONTAINER THAT IS CLEARLY MARKED "KEROSENE". NEVER STORE KEROSENE IN A RED CONTAINER.

Red containers are associated with gasoline.

NEVER store kerosene in the living space. Kerosene should be stored in a well ventilated place outside the living area.

NEVER use any fuel other than 1-K kerosene (#1/#2 diesel/fuel oil, JET A or JP-8 fuels are acceptable substitutes)

NEVER use fuel such as gasoline, benzene, alcohol, white gas, camp stove fuel, paint thinners, or other oil compounds in this heater. These are volatile fuels that can cause an explosion or uncontrolled flames.

NEVER store kerosene in direct sunlight or near a source of heat.

NEVER use kerosene that has been stored from one season to the next. Kerosene deteriorates over time.

"OLD KEROSENE" WILL NOT BURN PROPERLY IN THIS HEATER.

5. OVERVIEW OF HEATER'S DESIGN

Fuel System: This heater is equipped with an electric air pump that forces air through the air line connected to the fuel intake and then through a nozzle in the burner bead When the air passes in front of the fuel intake it causes fuel to rise from the tank and into the burner nozzle. This fuel and air mixture is then sprayed into the combustion chamber in a fine mist.

"Sure Fire Ignition" : The electronic ignitor sends voltage to a specially designed spark plug. The spark plug ignites the fuel and air mixture described above.

The Air System : The heavy duty motor turns a fan that forces air into and around the combustion chamber. Here the air is heated and then forced out the front of the heater.

The Safety System :

A. Temperature Limit Control : This heater is equipped with a Temperature Limit Control designed to turn off the heater should the internal temperature rise to an unsafe level. If this device activates and turns your heater off it may require service.

MODELS	Internal Shut-Off Temp. Plus/Minus 10 Degrees	Reset Temperature Plus/Minus 10 Degrees
KFA50	176˚F/80˚C	122˚F/50˚C
KFA80	158˚F/70˚C	104˚F/40˚C
KFA135	158˚F/70˚C	104˚F/40˚C
KFA180	230˚F/110˚C	194˚F/90˚C
KFA220	194˚F/90˚C	140˚F/60˚C

B. Electrical System Protection: This heater's electrical system is protected by a fuse mounted to the PCB assembly that protects it and other electrical components from damage. If your heater fails to operate check this fuse first and replace as needed.

FUSE TYPE:	All Models	125 volt / 8 amps

C. Flame-Out Sensor : Utilizes a photocell to monitor the flame in burn chamber during normal operation. It will cause the heater to shut off if the burner flame extinguish

6. FUELING YOUR HEATER

NEVER FILL THE HEATER FUEL TANK IN THE LIVING SPACE : FILL THE TANK OUTDOORS. DO NOT OVERFILL YOUR HEATER AND BE SURE HEATER IS LEVELED.

IMPORTANT NOTICE REGARDING FIRST IGNITION OF HEATER :

The heater should be lit outdoors for its first use.
This allows any oils used during manufacturing to burn off outside.

⚠ **WARNING!! : NEVER REFILL HEATER FUEL TANK WHEN HEATER IS OPERATING OR STILL HOT.**

7. OPERATION

A.) VENTILATION

RISK OF INDOOR AIR POLLUTION/USE HEATER ONLY IN WELL VENTILATED AREAS.

Provide a fresh air opening of at least three square feet (2,800 sq. cm) for each 100,000 BTU/Hr. rating. Provide extra fresh air if more heaters are being used.

Example : A KFA220DGD heater requires one of the following:

- a two-car garage door raised six inches (15.24 cm)
- a single-car garage door raised nine inches (22.86 cm)
- two, thirty-inch (76.20 cm) windows raised fifteen inches (38.1 cm)

B.) OPERATION

TO START HEATER

1. Fill fuel tank with fuel.

NOTE : Kerosene is recommended when the temperature drops below 0˚F(-18℃) to prevent ignition delay or failure.

2. Attach fuel cap.
3. Plug power cord of heater into three-prong, grounded extension cord. Extension cord must be at least six feet long.

   Extension Cord Wire Size Requirements
   - 6 to 100 feet (1.8 to 30.5 meters) long, use 16 AWG conductor.
   - 101 to 200 feet (30.8 to 61 meters) long, use 14 AWG conductor.
4. Turn “THERMOSTAT CONTROL knob” to desired setting (setting range : 40˚F ~ 110˚F) (KFA80/135/180/220 Models Only)
5. Push “BTU control Switch” to desired level “High or LOW” (See Figure 7.) (Dual BTU Models Only – “-LD” suffix)
6. Push Power Switch to “ON” position, Power lndicator Lamp will light and heater will start.
7. After startup, push “BTU control switch” to desired level “High or Low”

NOTE : Room Temperature display explanations are as follows: (KFA135/180/220 Models Only)
• When the room temperature is less 0˚F, the LED display will show “Lo”
• When room temp is between 0˚F and 99˚F, the number shown on the display is the currentroom temperature.
• When room temperature is greater than 99˚F, the LED display will show “Hi”

If heater does not start, the thermostat setting may be too low, turn “thermostat Control Knob” to higher position to start heater. If heater still does not start, turn power switch to “OFF” and then to “ON” position. If heater still does not start, see Trouble-shootiong Guide on page 11.

NOTE : User can select to operate the heater on two different BTU levels(High or Low). To stabilize heater and prevent ignition delay, select BTU level after turning the heater on, or while it is in operation by pushing the BTU control switch. If the heater started at low BTU level in cold weather or low fuel tank, ignition failure can occur.

NOTE : In cold weather, ignition may be improved by holding a finger over the end of the relief valve or block fanguard in half with newspaper etc. until the heater ignites.

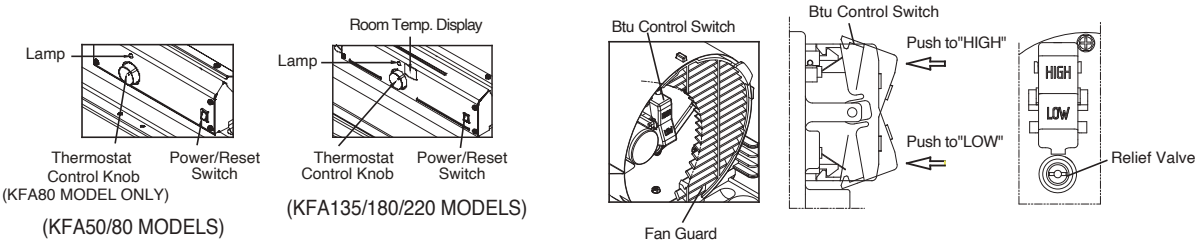

Figure 7. Controls for All Models

NOTE : The major electrical components of this heater are protected by a safety fuse mounted to the PCB board.If your heater fails to start, check this fuse first and replace as necessary. You should also check yourpower source to insure that proper voltage and frequency are being supplied to the heater.

NEVER LEAVE THE HEATER UNATTENDED WHILE BURNING

TO STOP HEATER

1. Turn switch to "OFF" and unplug power cord.

TO RESTART HEATER

1.Wait 10 seconds after stopping heater.

2. Repeat steps under to start heater.

PIGGYBACK POWER CORD (Models with Piggyback Outlet Only)

⚠ **WARNING : SHOCK HAZARD!**

- Always cover electric outlet when not in use.
- Don't plug and use an appliance more than 120V/60Hz 5A current in this outlet.

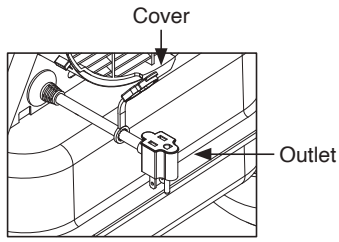

Models with Piggyback Outlet Only

Figure 8. Piggy Back Power Cord

8. LONG TERM STORAGE OF YOUR HEATER

FUEL TANK DRAIN

1-1. Drain fuel tank through fuel cap opening. (KFA50/80 Models Only)

1-2. Remove fuel drain bolt from rear bottom side of fuel tank using 3/4" socket or adjustable wrench and drain. (KFA135/180/220 Models Only)

2. Using a small amount of kerosene, swirl and rinse the inside of the tank.
NEVER mix water with the kerosene as it will cause rust inside the tank.
Pour the kerosene out making sure that you remove it all.
IMPORTANT: Do not store kerosene over summer months for use during next heating season. Using old fuel could damage heater.

3-1. Reinstall fuel cap. Properly dispose of old and dirty fuel. (KFA50/80 Models Only)

3-2. Reinstall fuel drain bolt to fuel tank and tighten firmly using 3/4" socket or adjustable wrench. (KFA135/180/220 Models Only)
IMPORTANT: Before reinstalling the fuel drain bolt, make sure the seal is on the bolt. If the seal is not used the bolt cannot be installed correctly and the fuel tank will leak.

4. Store heater in dry well ventilated area. Make sure storage place is free of dust and corrosive fumes.

5. Store the heater in the original box with the original packing material and keep the USER'S MANUAL with the heater.

9. MAINTENANCE

⚠ **WARNING!!: NEVER SERVICE HEATER WHILE IT IS PLUGGED IN OR WHILE HOT!**

USE ORIGINAL EQUIPMENT REPLACEMENT PARTS.
Use of third party or other alternate components will void warranty and may cause unsafe operating conditions.

A.) FUEL TANK FLUSH EVERY 200 HOURS OF OPERATION OR AS NEEDED

B.) AIR INTAKE FILTER

WASH AND DRY WITH SOAP AND WATER EVERY 500 HOURS OF OPERATION OR AS NEEDED

- Remove screws along each side of heater using medium phillips screwdriver.
- Lift upper shell off.
- Remove fan guard. Wash or replace air intake filter.
- Reinstall fan guard and upper shell.

C.) AIR OUTPUT FILTER, LINT FILTER

REPLACE EVERY 500 HOURS OF OPERATION OR ONCE A YEAR.

- Remove upper shell and fan guard.
- Turn Air pressure gauge counter-clock wise and remove Remove end filter cover screws using medium phillips screwdriver. Remove end filter cover. Replace air output and lint filter.
- Reinstall end filter cover and air pressure gauge.
- Reinstall fan guard and upper shell.

D.) PUMP PRESSURE ADJUSTMETN

NOTE : If the pump pressure needs to be adjusted, make sure the heater is running on the HIGH BTU setting.

- Push the BTU CONTROL Switch to HIGH. (See Operation, page 8, Dual BTU Models Only – "-LD" suffix)
- Remove Pressure Gauge Plug from End Filter Cover. (Single BTU Models Only – "-L" suffix)
- Start heater (See Operation, page 8) Allow motor to reach full speed
- Adjust pressure(Using a flat blade screw driver) Turn relief valve to clockwise to increase pressure. Turn relief valve to counter clockwise to decrease pressure.
- Stop heater (See Operation, page 9)

MODEL	Pump Pressure		
	Double BTU		Single BTU
	High BTU level	Low BTU level	BTU level
KFA50	3.8 psi	N/A	3.8 psi
KFA80	3.8 psi	2.7 psi	3.8 psi
KFA135	5.5 psi	3.5 psi	5.5 psi
KFA180	6.5 psi	4.5 psi	6.5 psi
KFA220	8.5 psi	6.5 psi	8.5 psi

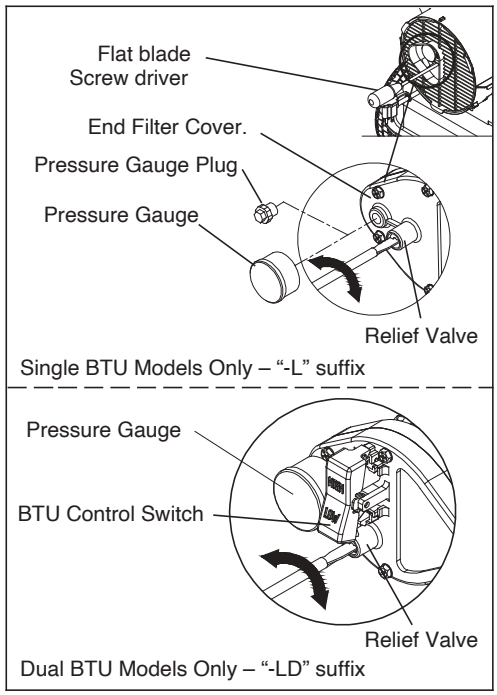

Figure 9. Adjusting Pump Pressure

E.) FUEL FILTER

CLEAN OR REPLACE TWICE A HEATING SEASON OR AS NEEDED.

- Remove side cover screws using medium phillips screwdriver.
- Disconnect switch wires from power switch and remove side cover.
- Pull fuel line off fuel filter neck.
- Tum fuel filter to counter clockwise and pull to remove (KFA50/80 MODELS).
- Turn fuel filter 90 to clockwise and pull to remove (KFA135/180/220 MODELS).
- Wash fuel filter with clean fuel and replace in tank.
- Attach fuel line to fuel filter neck.
- Replace switch wires to power switch.
- Reinstall side cover.

NOTE: USE ONLY ORIGINAL EQUIPMENT REPLACEMENT PARTS. Use of alternate or third party components will void any warranty and may cause unsafe operating condition.

10. TROUBLESHOOTING GUIDE

TROUBLE	POSSIBLE CAUSE	CORRECTIVE ACTION
Heater ignites but MAIN PCB assembly shuts heater off after a short period of time. (Indicator Lamp is flickering and room temp. display indicates " E1 ")	1. Wrong pump pressure. 2. Dirty Air Output,Air Intake or Lint Filter. 3. Dirty Fuel Filter. 4. Bad electrical connection between photocell and MAIN PCB assembly.	1. See Pump Pressure Adjustment, Page 10. 2. See Air Output, Air intake and Lint Filters, page 9-10. 3. See Fuel Filter, Page 10. 4. Check electrical components See wiring diagram, Page 12.
Heater will not ignite but motor runs for a short period of time.(Indicator Lamp is flickering and room temp.display indicates " E1 ")	1. No fuel in tank. 2. Wrong pump pressure. 3. Dirty fuel filter. 4. Water in fuel tank. 5. Bad electrical connection between ignitor and MAIN PCB assembly.	1. Fill tank with kerosene. 2. See Pump Pressure Adjustment, Page 10. 3. See Fuel Filter, Page 10. 4. Flush fuel tank with clean kerosene, Page 9. 5. Check electrical components See wiring diagram, Page 12.
Fan does not turn when heater is plugged in and power switch was in the " ON " Position. (Indicator Lamp is on or flickering)	1. Thermostat setting is too low. 2. Bad electrical connection between motor and MAIN PCB assembly.	1. Turn thermostat control knob to a higher setting. 2. Check electrical connections, See Wiring Diagram, Page 12.
(Indicator Lamp is flickering and room temp. display indicates "E2")	1. Sensor Failure.	1. Replace P.C.B Assembly. See Wiring diagram, Page 12.
(Indicator Lamp is flickering and room temp. display indicates "E3")	1. Thermostat switch failure.	1. Replace P.C.B Assembly. See Wiring diagram, Page 12.
Heater will not turn-on (Indicator Lamp is off)	1. Temperature limit safety device is overheated. 2. No electrical power 3. Blown fuse. 4. Bad electrical connection between temperature limit safety device and PCB board.	1. Turn power switch to "OFF" and allow to cool (about 10 min.) 2. Check to insure heater cord and extension cord are plugged in. Check power supply. 3. Replace safety fuse in PCB board. 4. Check electrical connections See Wiring Diagram, Page 12.

11. WIRING DIAGRAM

A) WIRING DIAGRAM (KFA50 MODEL)

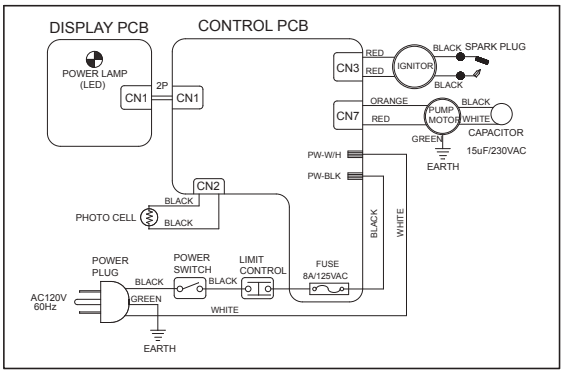

B) WIRING DIAGRAM (KFA80/135/180/220 MODELS)

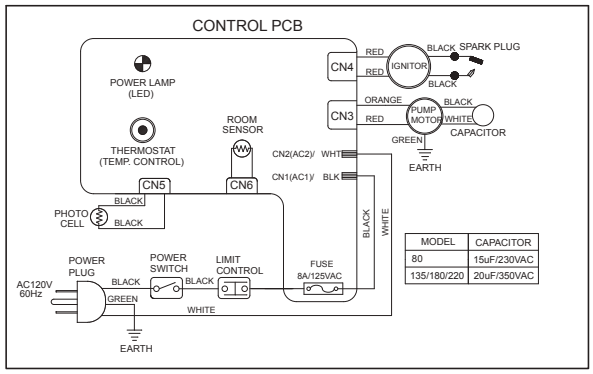

12. SPECIFICATIONS

MODEL		KFA50	KFA80		KFA135		KFA180		KFA220	
		Single	Single	Dual	Single	Dual	Single	Dual	Single	Dual
BTU/Hr.	HIGH	50,000	80,000	80,000	135,000	135,000	180,000	180,000	220,000	220,000
	LOW	N/A	N/A	55,000	N/A	95,000	N/A	140,000	N/A	180,000
Fuel Consumption - Gal./h.(L./h)	HIGH	0.38(1.44)	0.60(2.27)	0.60(2.27)	1.02(3.86)	1.02(3.86)	1.36(5.15)	1.36(5.15)	1.66(6.28)	1.66(6.28)
	LOW	N/A	N/A	0.40(1.54)	N/A	0.72(2.73)	N/A	1.06(4.01)	N/A	1.36(5.15)
Fuel Tank Capacity- Gal.(L)		5.0(18.9)	5.0(18.9)		10.0(37.9)		13.0(49.2)		13.0(49.2)	
Pump Pressure - psi (kgf/㎠)	HIGH	3.8(0.27)	3.8(0.27)	3.8(0.27)	5.5(0.39)	5.5(0.39)	6.5(0.46)	6.5(0.46)	8.5(0.60)	8.5(0.60)
	LOW	N/A	N/A	2.7(0.19)	N/A	3.5(0.25)	N/A	4.5(0.32)	N/A	6.5(0.46)
Volt/Hz		120Vac/60hz	120Vac/60hz		120Vac/60hz		120Vac/60hz		120Vac/60hz	
Amps.		1.6	1.6		2.5		3.2		3.7	
Phase		1	1		1		1		1	
Size(D×W×H), Inch(mm)		29.9×11.7×15.75 (760×297×400)	29.9×11.7v15.75 (760×297×400)		37.76×21.5×26.18 (959×547×665)		45.43×23.1×28.15 (1,154×587×715)		45.43×23.1×28.15 (1,154×587×715)	
Weight Lbs.(kg)		26.9(12.2)	26.9(12.2)		48.82(22.19)		56.39(25.58)		56.39(25.58)	

13. EXPOLODED PARTS DRAWING

BURNER HEAD ASSEMBLY

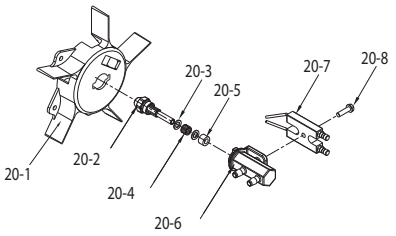

KFA50/80/135/180

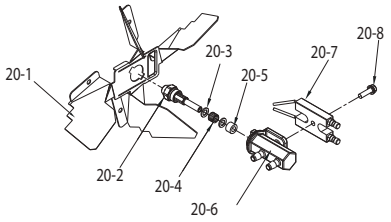

KFA220

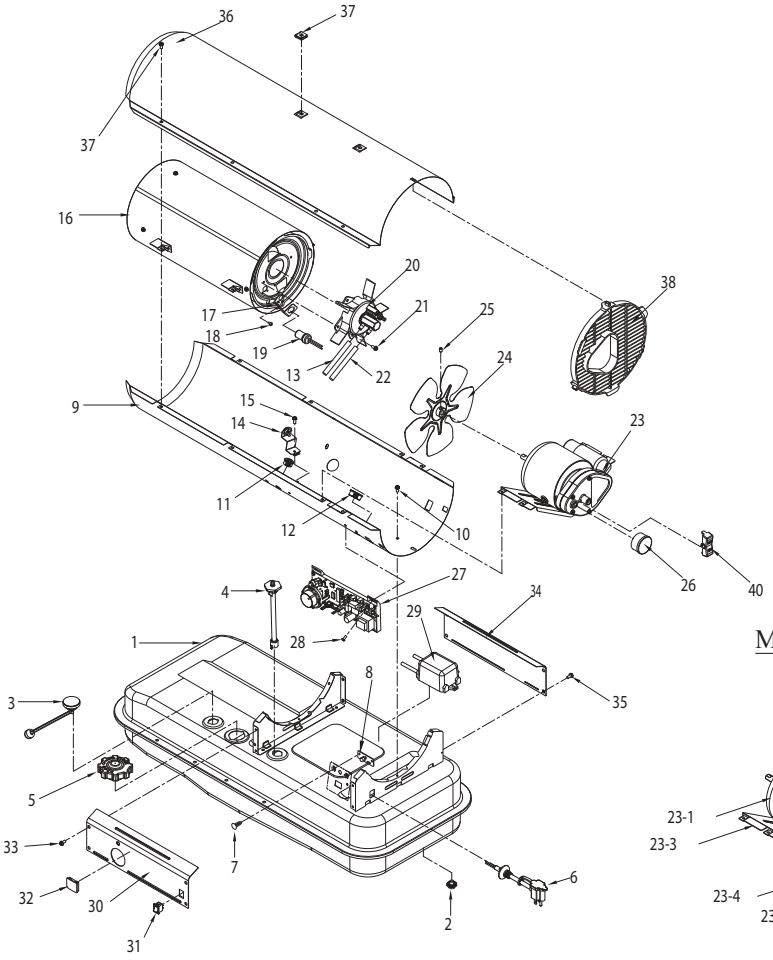

MOTOR AND PUMP ASSEMBLY

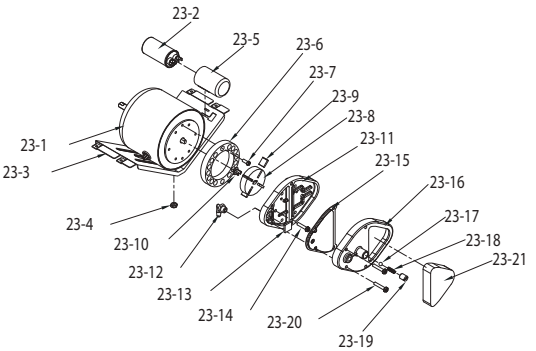

14. PARTS LIST(KFA50/80/135)

KEY NO.	DESCRIPTION	PARTNO.			Quantity
		KFA50	**KFA80**	**KFA135**	
1	Fuel Tank Assembly	2151-0046-01	2151-0047-01	2151-0048-03	1
2	Fuel Drain-Bolt	-	-	4329-0072-00	1
3	Fuel Gauge	2156-0046-00	2156-0049-00	2156-0051-00	1
4	Fuel Filter Assembly	2155-0005-00	2155-0005-00	2155-0001-00	1
5	Fuel Cap	2151-0041-00	2151-0041-00	2151-0041-00	1
6	Power Cord	3980-0274-00	3980-0274-00	3980-0274-00	1
7	Button Support	3713-0048-00	-	-	2
8	Display P.C.B Assembly	215A-0013-00	-	-	1
9	Shell Lower	3111-0501-08	3111-0501-08	3111-0506-04	1
10	Flange Screw	4319-0015-00	4319-0015-00	4319-0015-00	4
11	Bushing-Grommet(S)	3231-0120-00	3231-0120-00	3231-0120-00	1
12	Bushing-Grommet(L)	3231-0121-00	3231-0121-00	3231-0121-00	1
13	Air-Line	3341-0035-00	3341-0035-00	3341-0036-00	1
14	Temperature Limit Assembly	2153-0022-00	2153-0033-00	2153-0033-00	1
15	Flange-Screw	4319-0015-00	4319-0015-00	4319-0015-00	1
16	Chamber Assembly	2152-0292-00	2152-0293-00	2152-0294-00	1
17	Bracket Photocell	3131-0159-00	3131-0159-00	3131-0159-00	1
18	Screw-BH1	4311-0068-00	4311-0068-00	4311-0068-00	1
19	Photocell Assembly	*SP-KFA1007	*SP-KFA1007	*SP-KFA1007	1
20	Burner Head Assembly	2152-0120-00	2152-0121-00	2151-0122-00	1
20-1	Burner Head	3531-0026-00	3531-0026-00	3531-0025-00	1
20-2	Nozzle	*SP-KFA1026	*SP-KFA1027	*SP-KFA1003	1
20-3	Washer-Nozzle Seal	4349-0016-00	4349-0016-00	4349-0016-00	2
20-4	Spring-Nozzle Seal	3431-0010-00	3431-0010-00	3431-0010-00	1
20-5	O-Ring	3311-0006-00	3311-0006-00	3311-0006-00	1
20-6	Nozzle Adaptor	3231-0178-00	3231-0178-00	3231-0179-00	1
20-7	Spark Plug	*SP-KFA1008	*SP-KFA1008	*SP-KFA1021	1
20-8	Bolt-Flange	4329-0079-00	4329-0079-00	4329-0079-00	1
21	Flange Screw	4319-0015-00	4319-0015-00	4319-0015-00	3
22	Fuel Line	3341-0034-00	3341-0034-00	3341-0032-00	1
23	Motor and Pump Assembly	2154-0135-00	2154-0135-00 (S)	2154-0136-00 (S)	1
			2154-0140-00 (D)	2154-0140-00 (D)	1
23-1	Motor	3970-0210-00	3970-0210-00	3970-0211-00	1
23-2	Capacitor	3820-0257-00	3820-0257-00	20-0258-00	1
23-3	Motor Support	3111-0440-00	3111-0440-00	3111-0439-00	1
23-4	Nut-Hex	4331-0022-00	4331-0022-00	4331-0022-00	2
23-5	Holder Capacitor	-	-	3231-0182-00	1
23-6	Pump Body	3541-0022-00	3541-0022-00	3541-0022-00	1
23-7	Bolt-BH Special	4321-0198-00	4321-0198-00	4321-0198-00	2
23-8	Rotor	See SP-KFA1000[1]	See SP-KFA1000[1]	See SP-KFA1000[1]	1
23-9	Blade	See SP-KFA1000[1]	See SP-KFA1000[1]	See SP-KFA1000[1]	4
23-10	Insert	See SP-KFA1000[1]	See SP-KFA10001	See SP-KFA10001	1
23-11	End Pump Cover	3531-0027-00	3531-0027-00	3531-0027-00	1
23-12	Elbow	3231-0181-00	3231-0181-00	3231-0181-00	1
23-13	Lint Filter	See SP-KFA1005[2]	See SP-KFA1005[2]	See SP-KFA1005[2]	1
23-14	Bolt Flange	4329-0081-00	4329-0081-00	4329-0081-00	6
23-15	Output Filter	See SP-KFA1005[2]	See SP-KFA1005[2]	See SP-KFA1005[2]	1
23-16	End Filter Cover	3221-0029-00	3221-0071-00	3221-0071-00	1
23-17	Ball	See SP-KFA1006[3]	See SP-KFA1010[3]	See SP-KFA1010[3]	SINGLE = 1 DUAL = 2

14. PARTS LIST(KFA50/80/135)

KEY NO.	DESCRIPTION	PARTNO.			Quantity
		KFA50	**KFA80**	**KFA135**	
23-18	Spring	See SP-KFA1006[3]	See SP-KFA1010[3]	See SP-KFA1010[3]	SINGLE = 1 DUAL = 2
23-19	Adjusting Screw	See SP-KFA1006[3]	See SP-KFA1010[3]	See SP-KFA1010[3]	SINGLE = 1 DUAL = 2
23-20	Bolt Flange	4329-0016-00	4329-0081-00	4320-0016-00	4
23-21	Intake Filter	See SP-KFA1005[2]	See SP-KFA1005[2]	See SP-KFA1005[2]	1
24	Fan Assembly	2154-0010-00	2154-0009-00	2154-0173-00	1
25	Bolt Headless Hex Socket	4323-0008-00	4323-0008-00	4323-0008-00	1
26	Pressure Gauge	-	3740-0049-00	3740-0049-00	1
27	Main P.C.B Assembly	215A-0048-00	215A-0073-00	215A-0074-00	1
28	Screw-TH2S	4312-0044-00	4312-0044-00	4312-0044-00	2
29	Ignitor	39E0-0071-00	39E0-0071-00	39E0-0071-00	1
30	Side Cover-Right	3121-0840-00	3121-0879-00	3121-0888-00	1
31	Power Switch	39A0-0191-00	39A0-0191-00	39A0-0191-00	1
32	Window Display	-	-	3231-0113-00	1
33	Flange Screw	4319-0015-00	4319-0015-00	4319-0015-00	4
34	Side Cover-Left	3121-0845-00	3121-0878-00	3121-0881-00	1
35	Flange Screw	4319-0015-00	4319-0015-00	4319-0015-00	4
36	Shell Upper	3111-0502-09	3111-0502-09	3111-0507-10	1
37	Clip Nut	3131-0182-00	3131-0182-00	-	2
38	Fan Guard	3221-0074-00	3221-0074-00	3221-0075-00	1
39	Flange Screw	4319-0015-00	4319-0015-00	4319-0015-00	8
40	BTU Control Switch	-	2154-0070-00	2154-0070-00	1

KEY NO.	DESCRIPTION	PARTNO.			Quantity
		KFA50	**KFA80**	**KFA135**	
1	Rotor Kit	SP-KFA1000	SP-KFA1000	SP-KFA1000	1
2	Filter Kit	SP-KFA1005	SP-KFA1005	SP-KFA1005	1
3	Plug/Pump Adjuster Kit	SP-KFA1006	SP-KFA1006	SP-KFA1006	50,80k = 1 135~220k = 2

FOR TECHNICAL ASSISTANCE SEE YOUR LOCAL RETAILER OR CONTACT US AT:

Phone: 1-877-447-4768

14. PARTS LIST(KFA180/220)

KEY NO.	DESCRIPTION	PARTNO.		Quantity
		KFA180	**KFA220**	
1	Fuel Tank Assembly	2151-0049-01	2151-0049-01	1
2	Fuel Drain-Bolt	4329-0072-00	4329-0072-00	1
3	Fuel Gauge	2156-0051-00	2156-0052-00	1
4	Fuel Filter Assembly	2155-0001-00	2155-0001-00	1
5	Fuel Cap	2151-0041-00	2151-0041-00	1
6	Power Cord	3980-0274-00	3980-0274-00	1
7	Button Support	-	-	2
8	Display P.C.B Assembly	-	-	1
9	Shell Lower	3111-0504-07	3111-0504-07	1
10	Flange Screw	4319-0015-00	4319-0015-00	4
11	Bushing-Grommet(S)	3231-0120-00	-	1
12	Bushing-Grommet(L)	3231-0121-00	3231-0121-00	180k = 1 220k = 2
13	Air-Line	3341-0036-00	3341-0036-00	1
14	Temperature Limit Assembly	2153-0023-00	2153-0024-00	1
15	Flange-Screw	4319-0015-00	4319-0015-00	1
16	Chamber Assembly	2152-0295-00	2152-0302-00	1
17	Bracket Photocell	3131-0159-00	3131-0159-00	1
18	Screw-BH1	4311-0068-00	4311-0068-00	1
19	Photocell Assembly	*SP-KFA1007	*SP-KFA1007	1
20	Burner Head Assembly	2152-0124-00	2152-0124-00	1
20-1	Burner Head	3121-0477-00	3121-0477-00	1
20-2	Nozzle	*SP-KFA1011	*SP-KFA1011	1
20-3	Washer-Nozzle Seal	4349-0016-00	4349-0016-00	2
20-4	Spring-Nozzle Seal	3431-0010-00	3431-0010-00	1
20-5	O-Ring	3311-0006-00	3311-0006-00	1
20-6	Nozzle Adaptor	3231-0180-00	3231-0180-00	1
20-7	Spark Plug	*SP-KFA1021	*SP-KFA1021	1
20-8	Bolt-Flange	4329-0079-00	4329-0079-00	1
21	Flange Screw	4319-0015-00	4319-0015-00	3
22	Fuel Line	3341-039-00	3341-039-00	1
23	Motor and Pump Assembly	2154-0142-01 (S)	2154-0137-01 (S)	1
		2154-0142-00 (D)	2154-0137-00 (D)	1
23-1	Motor	3970-0213-00	3970-0213-00	1
23-2	Capacitor	3820-0258-00	3820-0258-00	1
23-3	Motor Support	3111-0439-00	3111-0439-00	1
23-4	Nut-Hex	4331-0022-00	4331-0022-00	2
23-5	Holder Capacitor	3231-0182-00	3231-0182-00	1
23-6	Pump Body	3541-0022-00	3541-0022-00	1
23-7	Bolt-BH Special	4321-0198-00	4321-0198-00	2
23-8	Rotor	See SP-KFA1022[1]	See SP-KFA1022[1]	1
23-9	Blade	See SP-KFA1022[1]	See SP-KFA1022[1]	4
23-10	Insert	See SP-KFA10001	See SP-KFA10001	1
23-11	End Pump Cover	3531-0027-00	3531-0027-00	1
23-12	Elbow	3231-0181-00	3231-0181-00	1
23-13	Lint Filter	See SP-KFA1005[2]	See SP-KFA1005[2]	1
23-14	Bolt Flange	4329-0081-00	4329-0081-00	6
23-15	Output Filter	See SP-KFA1005[2]	See SP-KFA1005[2]	1
23-16	End Filter Cover	3221-0076-00	3221-0076-00	1
23-17	Ball	See SP-KFA1006[3]	See SP-KFA1010[3]	SINGLE = 1 DUAL = 2

14. PARTS LIST(KFA180/220)

KEY NO.	DESCRIPTION	PARTNO.		Quantity
		KFA180	**KFA220**	
23-18	Spring	See SP-KFA1006[3]	See SP-KFA1010[3]	SINGLE = 1 DUAL = 2
23-19	Adjusting Screw	See SP-KFA1006[3]	See SP-KFA1010[3]	SINGLE = 1 DUAL = 2
23-20	Bolt Flange	4329-0016-00	4320-0016-00	4
23-21	Intake Filter	See SP-KFA1005[2]	See SP-KFA1005[2]	1
24	Fan Assembly	2154-0174-00	2154-0174-00	1
25	Bolt Headless Hex Socket	4323-0008-00	4323-0008-00	1
26	Pressure Gauge	3740-0049-00	3740-0049-00	1
27	Main P.C.B Assembly	215A-0074-00	215A-0074-00	1
28	Screw-TH2S	4312-0044-00	4312-0044-00	2
29	Ignitor	39E0-0071-00	39E0-0071-00	1
30	Side Cover-Right	3121-0499-56	3121-0499-56	1
31	Power Switch	39A0-0191-00	39A0-0191-00	1
32	Window Display	3231-0113-00	3231-0113-00	1
33	Flange Screw	4319-0015-00	4319-0015-00	4
34	Side Cover-Left	3121-0845-00	3121-0881-00	1
35	Flange Screw	4319-0015-00	4319-0015-00	4
36	Shell Upper	3111-0505-04	3111-0505-04	1
37	Clip Nut	3131-0182-00	-	2
38	Fan Guard	3221-0074-00	3221-0075-00	1
39	Flange Screw	4319-0015-00	4319-0015-00	8
40	BTU Control Switch	2154-0070-00	2154-0070-00	1

KEY NO.	DESCRIPTION	PARTNO.		Quantity
		KFA180	**KFA220**	
1	Rotor Kit	SP-KFA1000	SP-KFA1000	1
2	Filter Kit	SP-KFA1005	SP-KFA1005	1
3	Plug/Pump Adjuster Kit	SP-KFA1006	SP-KFA1006	2

FOR TECHNICAL ASSISTANCE SEE YOUR LOCAL RETAILER OR CONTACT US AT:

Phone: 1-877-447-4768

14. PARTS LIST (WHEELS AND HANDLE)

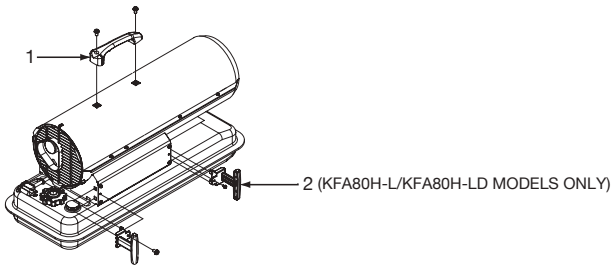

KFA50/80 MODELS

KEY NO.	DESCRIPTION	PARTNO.		Quantity
		KFA50	**KFA80**	
1	Handle	3231-0073-00	3551-0150-00	1
2	Cord Wrap	-	3221-0041-00	2

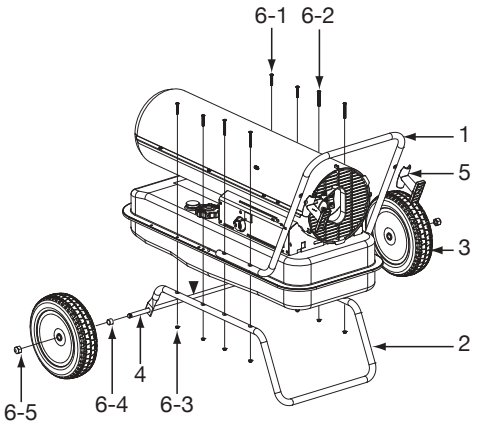

KFA135/180/220 MODELS

KEY NO.	DESCRIPTION	PARTNO.		Quantity
		KFA135	**KFA180 / 220**	
1	Handle Pipe	3551-0149-00	3551-0150-00	1
2	Wheel Support Frame	3551-0151-00	3551-0152-00	1
3	Wheel	3720-0031-00	3720-0031-00	2
4	Threaded Axle	3551-0088-00	3551-0089-00	1
5	Cord Wrap	3221-0130-00	3221-0130-00	2
6	Hardware Kit	HW-KFA1016	HW-KFA1016	1
6-1	Bolt	4321-0293-00	4321-0293-00	4
6-2	Bolt	4321-0166-00	4321-0166-00	4
6-3	Nut	Included in Hardware Kit	Included in Hardware Kit	8
6-4	Bushing	Included in Hardware Kit	Included in Hardware Kit	2
6-5	Cap Nut L	Included in Hardware Kit	Included in Hardware Kit	2

Warranty

LIMITED WARRANTY:
This limited warranty is extended to the original retail purchaser of this Forced Air/Convection/Radiant Heater and warrants against any defect in materials and workmanship for a period of one (1) year from the date of retail sale.GHP Group, Inc., at it's option, will either provide replacement parts or replace or repair the unit, when properly returned to the retailer where purchased or one of our service centers as directed by GHP Group,Inc., within one (1) year of retail purchase. (Shipping costs, labour costs,etc. are the responsibility of the purchaser.)

DUTIES OF THE OWNER:
This heating appliance must be operated in accordance with the written instructions furnished with this heater. This warranty shall not excuse the owner from properly maintaining this heater in accordance with the written instructions furnished with this heater. A bill of sale, canceled check or payment record must be kept to verify purchase data and establish warranty period. Original carton should be kept in case of warranty return of unit.

WHAT IS NOT COVERED:
1. Damage resulting from use of improper fuel.
2. Damage caused by misuse or use contrary to the owners manual and safety guidelines.
3. Damage caused by a lack of normal maintenance.
4. Fuses
5. Use of non-standard parts or accessories.
6. Damage caused in transit. Freight charges on warranty parts or heaters to and from the factory shall be the responsibility of the owner.

This warranty does not imply or assume any responsibility for consequential damages that may result from the use, misuse, or the lack of routine maintenance of this heating appliance. A cleaning fee and the cost of parts may be charged for appliance failures resulting from lack of maintenance. This warranty does not cover claims which do not involve defective workmanship or materials. **FAILURE TO PERFORM GENERAL MAINTENANCE (INCLUDING CLEANING) WILL VOID THIS WARRANTY.**

THIS LIMITED WARRANTY IS GIVEN TO THE PURCHASER IN LIEU OF ALL OTHER WARRANTIES, EXPRESSED OR IMPLIED, INCLUDING BUT NOT LIMITED TO THE WARRANTIES OF MERCHANTABILITY OF FITNESS FOR A PARTICULAR PURPOSE. THE REMEDY PROVIDED IN THIS WARRANTY IS EXCLUSIVE AND IS GRANTED IN LIEU OF ALL OTHER REMEDIES. IN NO EVENT WILL GHP GROUP, INC. BE LIABLE FOR INCIDENTAL OR CONSEQUENTIAL DAMAGES.

Some states do not allow limitations on how long an implied warranty lasts, so the above limitation may not apply to you. Some states do not allow the exclusion or limitation of incidental or consequential damages so the above limitation or exclusion may not apply to you.

CLAIMS HANDLED AS FOLLOWS:
1. Contact your retailer and explain the problem.
2. If the retailer is unable to resolve the problem, contact our Customer Service Dept. detailing the heater model, the problem, and proof of date of purchase.
3. A representative will contact you. DO NOT RETURN THE HEATER TO GHP GROUP, INC. unless instructed by our Representative. This warranty gives you specific legal rights and you may also have other rights which vary from state to state.

GHP Group, Inc.
1501 Nicholas Blvd
Elk Grove Village, IL 60007

Tel: (877) 447-4768
www.ghpgroupinc.com