Round-top Shelter

Ideal for all purpose outdoor storage

10' x 20' x 8' (3 x 6 x 2.4 m)

ASSEMBLY MANUAL

Model NO.:103-1020R



Tools required for assembly (not included)



TABLE OF CONTENTS

Important safety instructions 2
Intended use 2
Parts list 3
Assembly preparation 4
Assembly ..... 4 - 9

IMPORTANT SAFETY INSTRUCTIONS



WARNING!

- To reduce the risk of serious injury, read the following safety instructions before assembling and using the product.
- No responsibility is accepted for damages or injuries resulting from improper installation or noncompliance with these instructions.
- Please note that the Manufacturer has no control over the elements such as wind, heavy snow or rain. The Manufacturer cannot control the location or soil conditions into which the shed is placed. The Manufacturer, without control of the elements, location or soil conditions, cannot be held responsible for damages caused by the shed to other items or damages to the .shed itself



- This product is a temporary structure and is not recommended as a permanent structure.
- Choose your shed’ s location carefully. Install your shed on flat horizontal ground only.
- Ensure enough clearance around the product. Before assembling the product, find level ground not less than 6’ (1.8 m) away from any structures or obstructions, such as fences, garages, houses, etc.
- Check for overhead utility lines, branches, laundry lines, etc. Do not install near roofs or other structures that may shed snow, ice or excessive run-off onto your shed. **Keep away from electrical wires!**
- Check municipal by-laws before setting up the product.
- Get an overview of all parts before attempting installation. Make sure all components are present.
- Do not use this product in environments for which it is not intended (i.e. extreme cold, high winds, extreme heat, heavy rainfall, etc.).
- Always wear safety glasses when assembling this product. Wear gloves when working with tubing to prevent cuts or abrasions.
- Any assembly or maintenance on the product must be carried out by adults only.
- Make sure you have the necessary manpower when assembling or moving the product.
- Keep children and pets away while setting up the product.
- CAUTION! Always keep children under close supervision while they are using this product or are in its vicinity. Never leave children unattended.
- CAUTION! Anchors must be used with all sheds. Covers should not be installed on any product until it has been properly anchored to the ground.
- Proper anchoring, keeping the cover tight and free of snow and debris is the responsibility of the consumer. Damages caused by improper anchoring are not included in the warranty.
- WARNING! Keep all flames and heat sources away from this fabric shed. The fabric will burn if left in continuous contact with a flame source.
- Do not use product with open flames and heated elements inside or near the product, including all types of stoves, gas heaters, gas lanterns, citronella torches, mosquito coils, etc.
- WARNING! In order to reduce risk of burning and avoid damage, DO NOT
  - cook, smoke, refuel or use any open flame devices in or around the shed.
  - store flammable liquids (gasoline, kerosene, propane, etc.) in the shed.
  - operate gas-powered vehicles/equipment in or around the shed.
- Keep open flames a safe distance away from the shed.
- Do not use hard-edged tools or instruments, such as rakes or shovels, to remove snow. These may puncture the cover.
- NEVER start the engine of any vehicle or machine inside a closed shed. Ensure good ventilation when starting engines and when doing any work with paints, cleaning agents, etc.
- This shed is NOT meant to hold heavy snow or ice loads. Snow or ice accumulation may cause your shed to collapse. To avoid overload, brush snow and ice from the roof with a broom or mop.
- NEVER clear the roof of snow or debris from inside the shed to avoid collapse, damage to property, personal injury and/or death.
- Remove accumulated water from the roof immediately or disassemble the shed in order to avoid any damage.
- Do not use alkaline detergents for cleaning. It will damage the polycarbonate material. Soap and warm water are recommended.

IMPORTANT! READ CAREFULLY AND RETAIN
FOR FUTURE REFERENCE

INTENDED USE

This temporary shed is intended to offer protection from damages caused by the sun, light rain, light snow, tree sap, bird and animal excrements. Do not use it to shield goods from high winds, heavy snow or ice storms. Only use it for its intended use.

PARTS LIST

No	Description	Illustration	Qty
1	Roof Tube One		5
2	Roof Tube Two		10
3	Corner Bent Leg		4
4	Corner Leg Tube		4
5	Center Leg Tube		6
6	Bottom Cross Rail Tube		8
7	Cross Rail Tube(with male end)		9
8	Cross Rail Tube		3
9	Support Brace (1st half)		4
10	Support Brace (2nd half)		4
11	Tube Connector		15
12	3-Way Cross Rail Clamp		8
13	4-Way Cross Rail Clamp	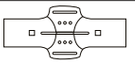	12
14	M6x35 Bolt		4
15	M6x45 Bolt		30
16	M6x80 Bolt	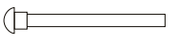	15
17	M6 Nut		49+1
18	M6 Washer		49+1
19	Foot Plate		6
20	Pin Bolt		6
21	Cotton Pin		6
22	Anchor	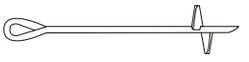	4
23	Cable (1' / 30 cm)		4
24	Cable Clamp		4
25	Roof Tarp		1
26	Front Door Panel (with zipper)		1
27	Back Panel		1
28	Ratchet Tie Down	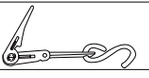	8

ASSEMBLY PREPARATION

- Place all parts from the packaging box in a cleared area and arrange them on the ground in front of you.
- Remove all packaging materials and place them back in the box. Do not dispose of the packaging materials until assembly is complete.
- Check for completeness and transport damages.

WARNING!

- Do not place the product under trees from which hard fruit such as apples, walnuts or heavy pine cones, etc., may fall. The shed's cover only protects against normal leaves and light debris, whereas large branches or other falling items may puncture or tear the cover material.
- Keep children away during assembly. This product contains small parts which can be swallowed by children.
- Do not attempt to assemble the product if any parts are missing.
- At least 2 people are needed to complete the assembly as some of the steps require heavy lifting.

ASSEMBLY

WARNING!

- Do not leave the shed unattended during assembly. Otherwise, personal injury or damage to the shed may occur!

Frame assembly overview

Diagram A

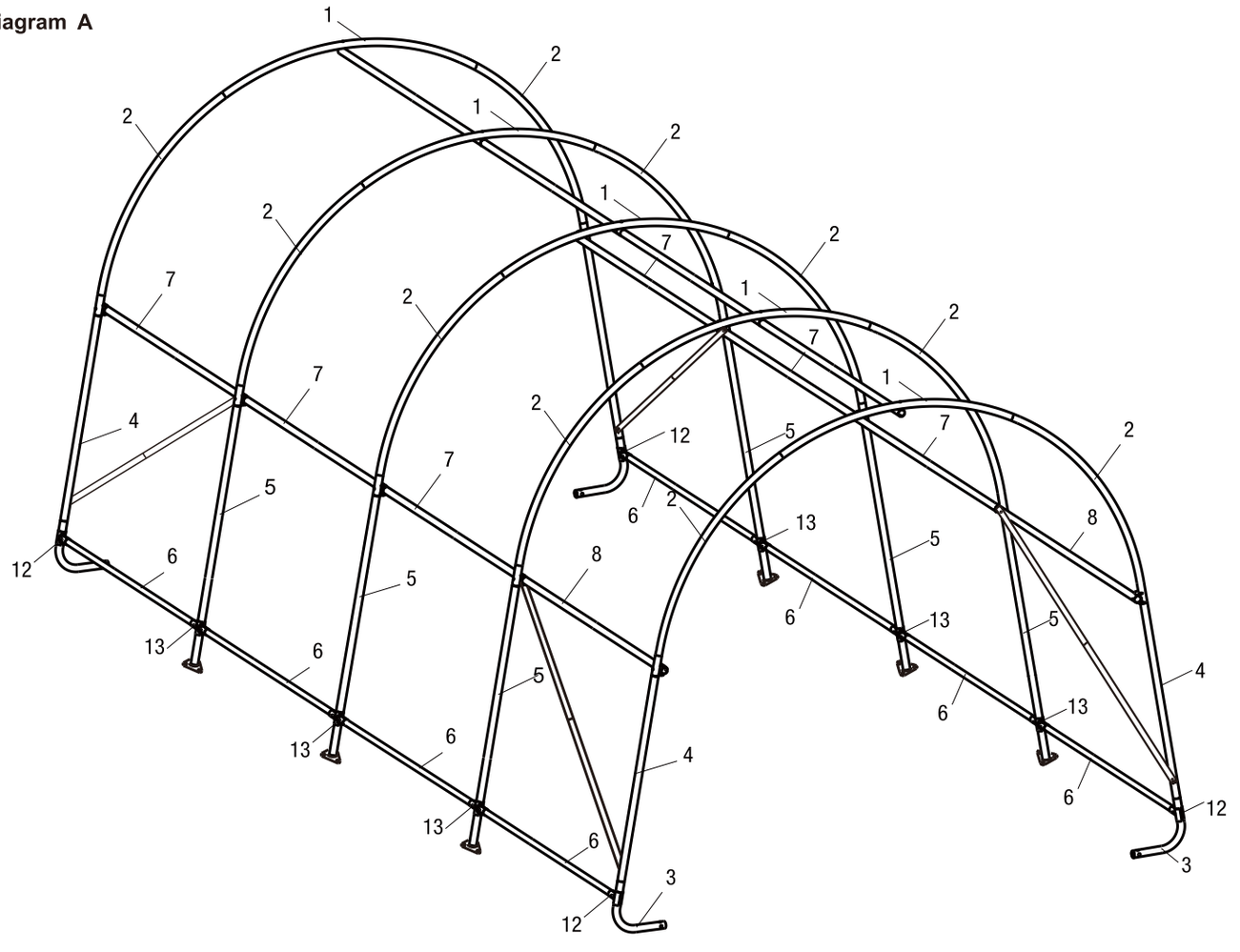

Step 1: Frame Assembly

Select level and suitable location for your shelter.

1. Assembly the two End Ribs

a. Follow Diagram B connecting the 7 tubes together (1pc tube #1, 2pcs tube #2, 2pcs tube #4 & 2pcs Bent Legs #3) to form 1 End Rib.

b. Repeat it to get the other End Rib.

Diagram B

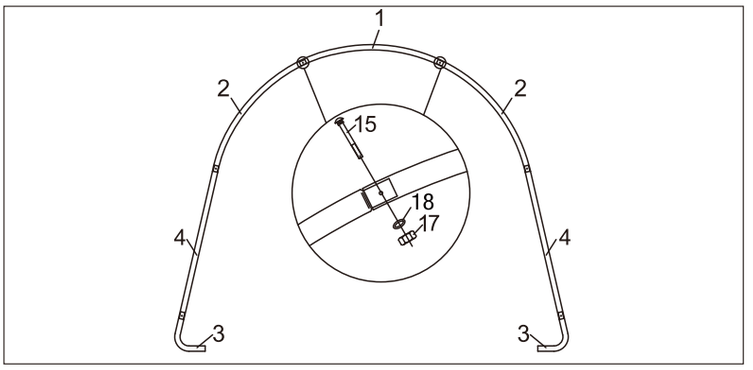

2. Assembly the 3 Center Ribs

a. Follow **Diagram C** connecting these 5 tubes together (1pc tube #1, 2pcs tube #2, 2pcs tube #5 & 2pcs tube #5) to form 1 Center Rib.

b. Repeat it to get the other 2 Center Ribs.

c. Insert the Center Ribs into the Foot Plate (#19). Align holes in the pole and foot plate, push the Pin Bolt (#20) through all the holes, Insert the Cotter Pin (#21) and split the tongues of the cotter pin with a slot screwdriver to secure this connection.

Use a rubber or wooden mallet to ensure all pipes are fully inserted.

Diagram C

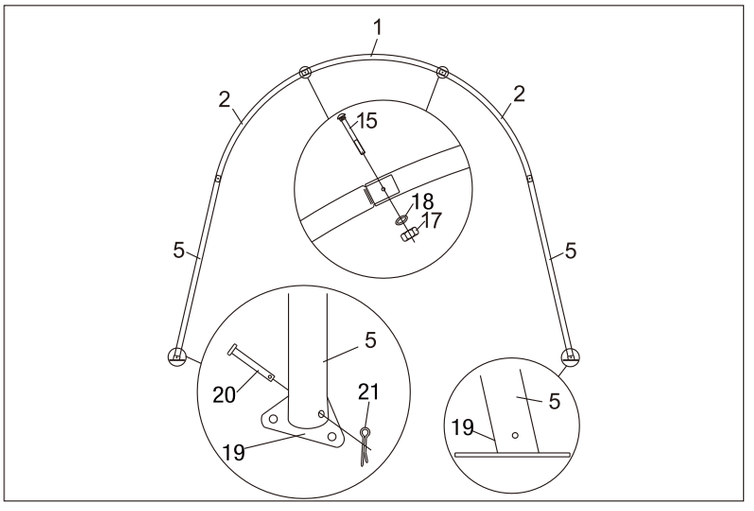

3. Attach Side Cross Rails

a. Pick one End Ribs & 2 Tube #8. Follow **Diagram D** use part #11 connecting Tube #8 and the End Rib by fittings (#16, #17 & #18).

Diagram D

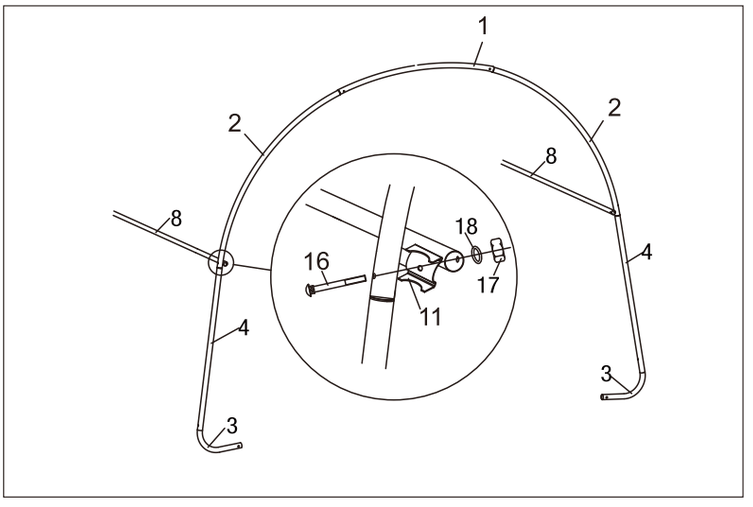

b. Insert the male end of tube #7 into tube #8.

c. Connect the two parts of Support Brace (#9 & #10) by Fittings (#14, #17 & #18)

d. Fix one end of the Support Brace on tube #3 by Fittings (#15, #17 & #18). And Fix the other end of the Support Brace with tube #2, #7 & #8 by Connector #11 and fittings (#16, #17 & #18).

Diagram E

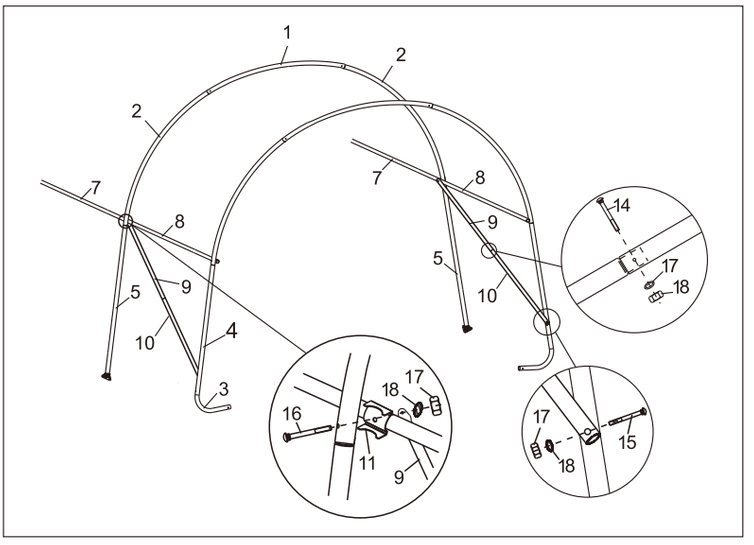

e. Repeat above steps, connecting all the rest 2 Center Ribs and last end Ribs, you will get the whole frame finished as **Diagram F**

Diagram F

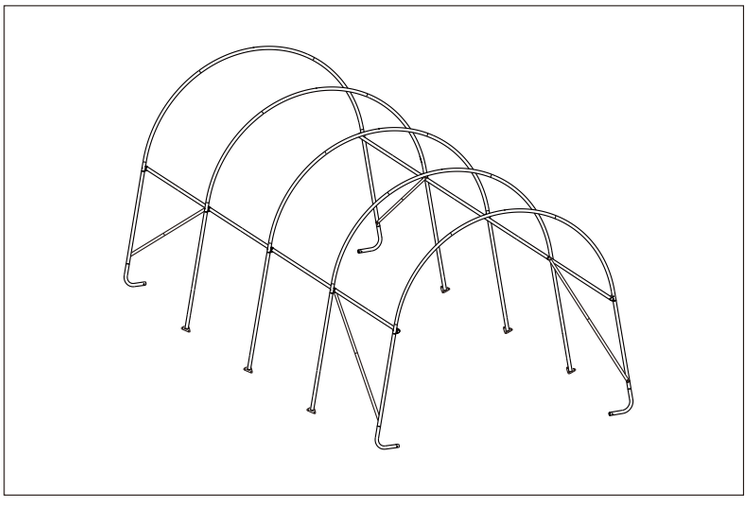

Note: The other set of Support Brace needs to be assembled in an opposite way with the 1st set.

Diagram G

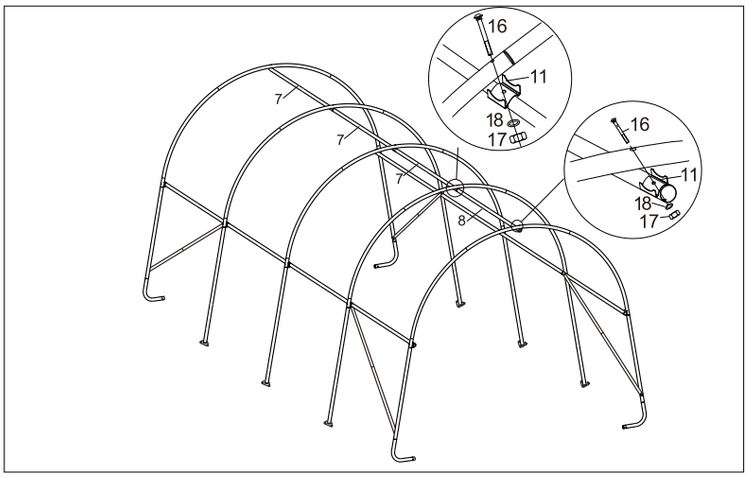

4. Attach Top Cross Rails

a. Pick one End Ribs & 1 Tube #8. Follow **Diagram G** use part #11 connecting Tube #8 and the End Rib by fittings (#16, #17 & #18).

b. Insert Tube #7 into tube #8, and fix it to the next Center Rib by fittings (#16, #17 & #18). And now please follow Diagram G and fix Tube #7 on top of the Rib.

Note: The end of last Tube #7 still needs to be fixed and the End Rib.

5. Square and Anchor the Frame

a. Check the mearsure of frame both 10' at the front and back corners, as well as the center.

b. Take a diagonal measure as shown in **Diagram H.** When these two measures are equal the frame is square. Adjust the frame until they are equal to within 1".

c. Once equal check the width measures again to ensure all are equal at 10'.

Diagram H

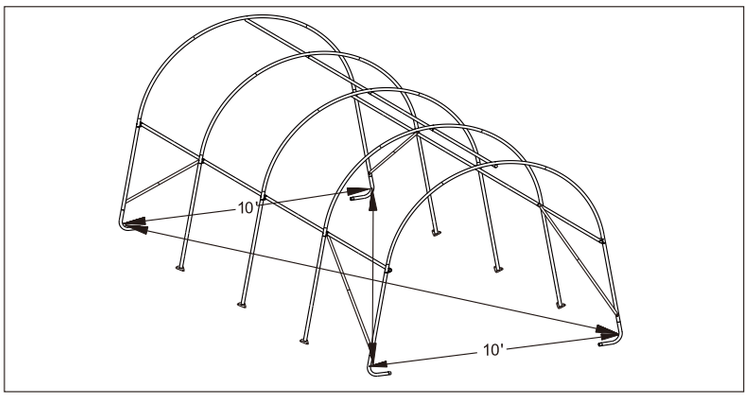

Step 2: Tarp Assembly

1. Installing the Front and Back Covers.

The front cover contains a zippered door to allow entry and exit to the shelter. Ensure to locate this cover to the desired end. Also ensure the zipper is in the 'closed' position while installing. The back cover is a solid piece of polyethylene. The covers are installed in the same fashion.

a. Install the front door panel #26 first. During installation, Ensure the zipper of the front door panel #26 is closed, for easier installation .See **Diagram I.**

Diagram I

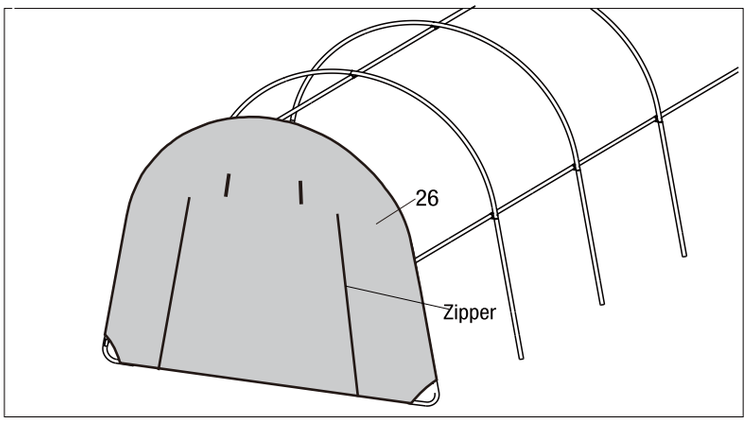

Diagram J

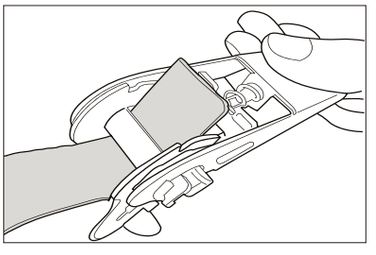

Diagram K

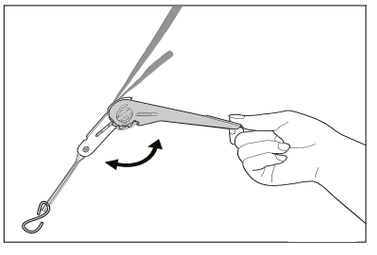

b. Before installing the door panels, to make sure the strap will stay in the sleeve when assembly thread the strap through the spindle of the ratchet. Make sure the length of the straps pulled out is about 1 feet. See **Diagram J.**

c. Raise and lower the handle two or three times to wind the strap onto the spindle .

d. Unlock the buckle on the strap, slip the webbed belt around the cross rail and relock the buckle again **Diagram L.**

L

Diagram

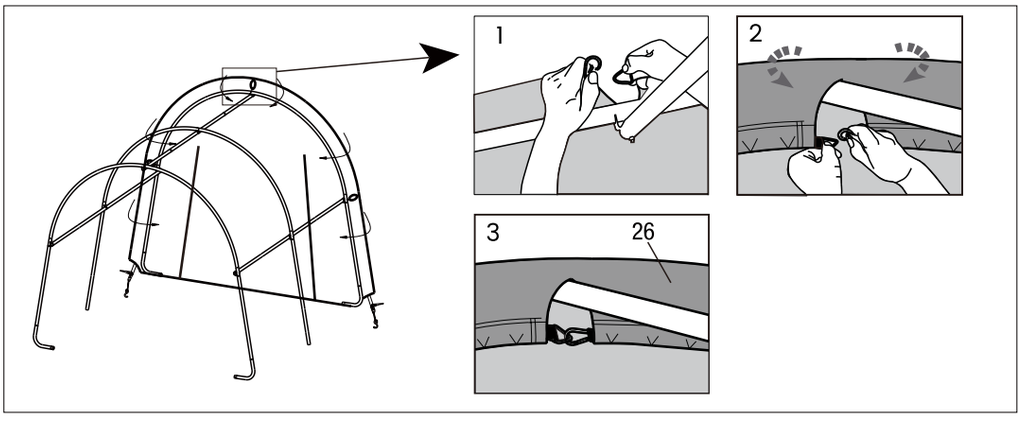

e. Repeat this step for the side cross rails **Diagram M.**

Diagram M

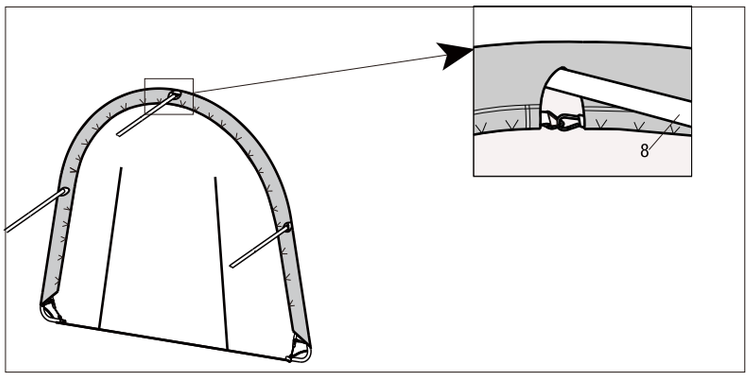

Diagram N

f. Insert the S-hook of the rachet into the hole of the bent corner leg #3. Pump the rachet handle repeatedly to tighten the strap. See **Diagram N.**

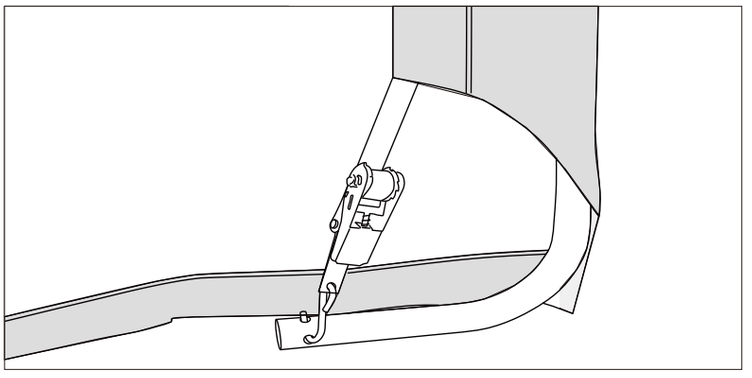

g. Repeat the same procedure to install the back panel #27 to its proper position.

2. Installing the Main Cover

Diagram O

a. Lay the cover on the ground next to the frame with inside of the cover (the side with eyelets) facing down and the webbing on the front and rear of the corner of the building. **Diagram O.**

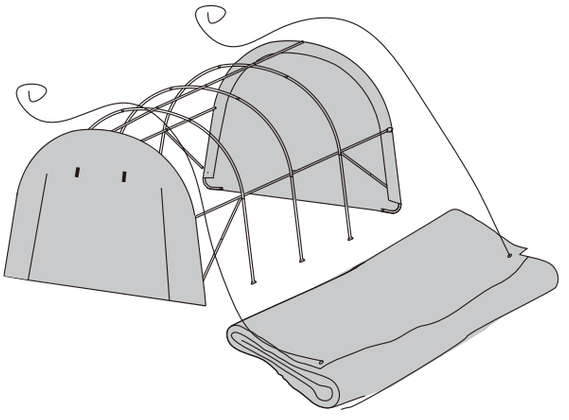

b. Tie a rope to the eyelets of the cover, each side one rope. (If you have enough people to work together, suggest you add another rope in the middle).

Diagram P

c. Pull cover over the frame by the help of the rope as **Diagram P**, making sure to center cover on frame. There should be an equal amount of overhanging at all four corners.

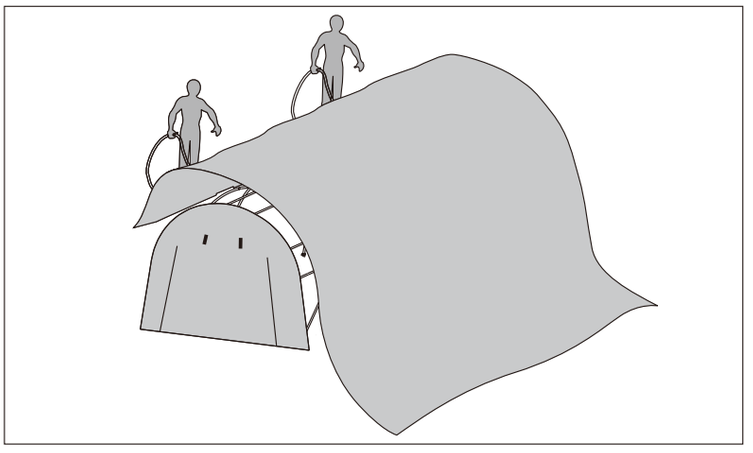

d. Insert the 4 S-hook of the rachet into the hole of the 4 bent corner leg #3.

Note: If small adjustments are needed, two people should the Roof Tarp (25) from the same side so that it does not twist.

Step 3: Attaching the bottom cross rails

a. Slide the bottom cross rails #6 through the tube sleeves on each side of the Roof Tarp #25. Assemble the bottom cross rails #6 to the ten legs with clamps #12, #13 and fixings #15, #17, #18 and tighten slightly. See **Diagram Q.**

b. Make sure the cross rails #6 are level, horizontal and at the same height on both sides. For your reference , the height of the bottom cross rail is about 7.5" to the ground on both sides.

c. Measure the distance between the interior cross corners and make sure they are of equal length. If they are not of equal length, tap the corner leg of the longer section (using a rubber mallet) inward until both diagonals are equal.

d. Tighten all the nuts and bolts at this stage.

e. Fasten the black straps at the four corners with the ratchet tie-down #28.

Diagram Q

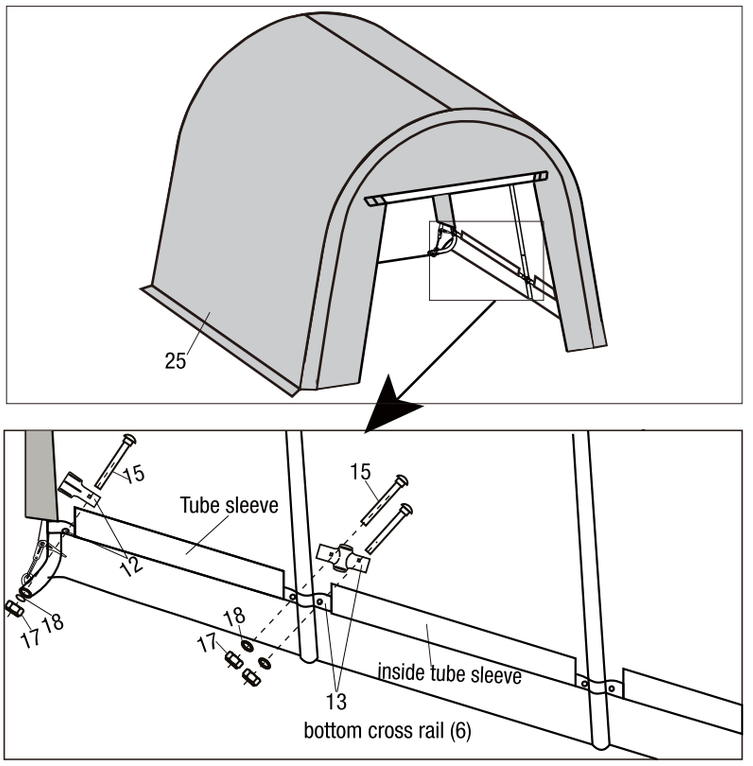

Step 4: Anchoring frame

Note:

- **The shed must be well-anchored.**
- **Do not attempt to install any of the fabric before the frame is properly anchored.**
- **If the ground is hard or rocky, pre-drill holes before inserting the anchors.**

a. Four anchors #22 are provided to secure the shed. They are to be installed around the bent corner legs #3 at each corner of the shed.

Screw the anchor head into the ground.

b. Insert the cable #23 through the eyelets of the anchor #22 and the bent corner leg #3. Secure the cable #23 with the cable clamp #24. See **Diagram R.**

c. Repeat the same procedure for the other three anchors #16.

d. Now the shed is ready for use.

Diagram R

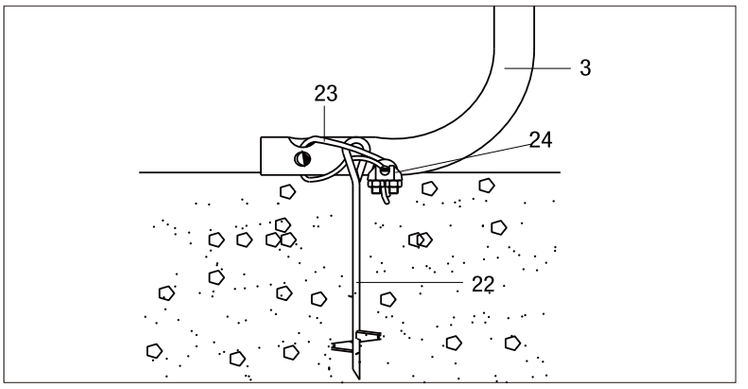

Note:

- **Check and tighten the bottom cross rails #6 and ratchets #28 monthly to ensure that the Roof Tarp #25 is tight and safe.**
- **When disassembling the shed, press the spring-loaded bar and open the ratchet handle completely to pull out the strap .See Diagram S.**

Diagram S

