SAVE THESE INSTRUCTIONS

INSTALLATION INSTRUCTIONS

king

alCove
Cove Heaters

KCV SERIES Cove Heater

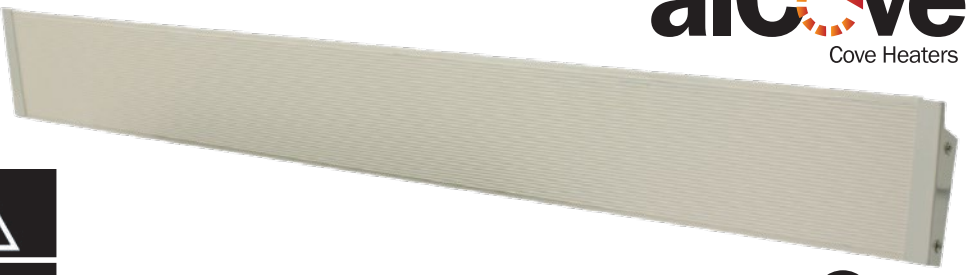

DANGER

ELECTRIC SHOCK OR FIRE HAZARD

READ ALL WIRE SIZING, VOLTAGE REQUIREMENTS AND SAFETY DATA TO AVOID PROPERTY DAMAGE AND PERSONAL INJURY

c UL us LISTED
E21609

WARNING

It is ***extremely important*** to verify the electrical power supply is the same voltage as the heater being installed. ***240 and 120 Volt heaters are not interchangeable***. Powering a 240 Volt unit with 120 Volt supply wires will reduce heater output by approximately 75%. Powering a 120 Volt unit with 240 Volt supply wires will destroy the heater and voids all guarantee and warranties.

CAUTION: Turn off power source supplying heater before attempting any installation, maintenance or repairs. Lock or tag circuit breaker/fuse panel door. Failure to do so could result in serious electrical shock, burns or possible death.

WARNINGS: To insure proper operation of this heater it should be a minimum of 6 feet above the floor and no closer than 2½" below drywall ceiling (6" vinyl or drop ceilings). Draperies should clear the front and the top of this heater by 6". Draperies hung below the heater should have a 2½" clearance. Do not block the heater in any manner. Never paint the heater.

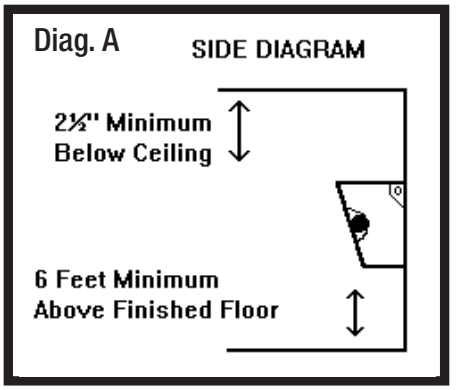

The KCV Cove Heater is coated with a silicone-based paint that requires up to 24 hours of run time to fully cure. The product can be safely handled and installed before curing, as the paint is dry to the touch at room temperature and will not smear. It is recommended to wear clean gloves during installation to avoid transferring dirt, oil, or other contaminants onto the heater's finish.

- During the curing period, the paint will soften when heated and may develop a glossy appearance. The elevated temperature causes the paint molecules to crosslink, forming a tough, durable finish that remains flexible as the heater expands and contracts.
- Do not touch the front cover with bare hands or fingers while the unit is operating, as it may cause burns. Additionally, avoid contact with foreign objects during the curing period while the heater is hot, as this can leave permanent marks on the paint. Once the curing process is complete, the paint will harden at full operating temperature, and the temporary glossy appearance will return to a flat finish.

To ensure the best appearance and finish:

- Allow the heater to run undisturbed for a full 24 hours. It may cycle on and off during this period; continuous operation is not required.
- Do not attempt to clean or wipe the surface while it is hot.
- Always allow the heater to cool to room temperature before handling, wiping, or cleaning.

REV. 66447_5-15-25

Following are some general guidelines:

- Do not recess this cove heater.
- Disconnect power at main panel.
- Make certain all wiring is in accordance with all local codes and units are properly grounded.
- Voltage rating of heater should be the same as supply load.
- Do not install the heater on vinyl wall coverings.

1. Remove heater from carton. Disassemble the aluminum heating panel from the back support frame. Remove knock out in junction box for electrical supply connection. See Figure A & B.
2. To install the back support frame on the wall, locate the studs in the wall and use existing mounting holes or pre-drill 3/16" holes as needed. Use appropriate fasteners to securely mount to wall. See Figure B.

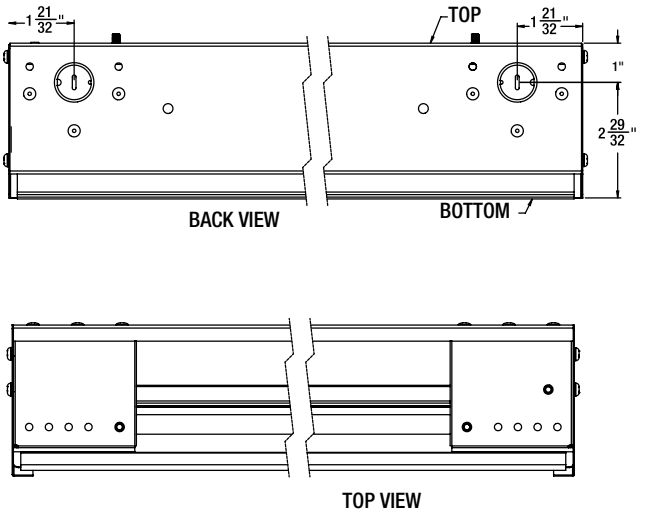

Fig. A

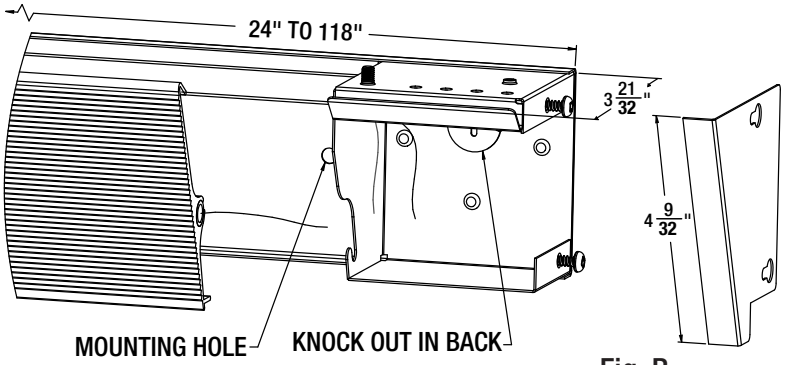

Fig. B

3. Temporarily hang the aluminum heating panel from the top lip of both junction boxes. This will support the heater while the electrical connections are made and allow one person to wire the heater without having to hold the panel at the same time. See Figure C.
4. Connect the supply cable grounding wire to the green wire pigtail in wiring compartment.
5. Follow the desired wiring diagram, to connect the power supply to the heater using approved wire nuts.

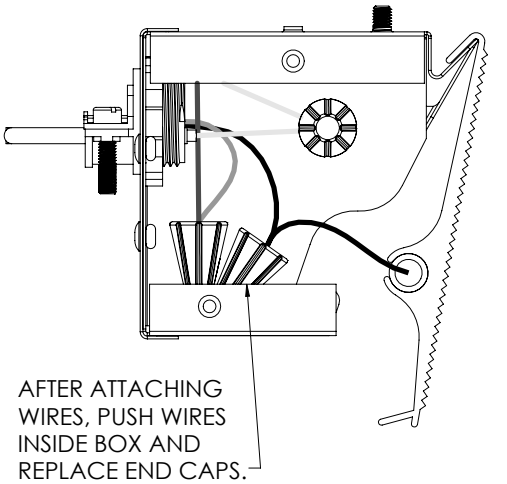

Fig. C

Instructions for left or right side wiring

6. Heater can be wired from either side - wire one side only.
   Caution: Power wires should be connected on one side only.
   In the opposite junction box, connect the white and black element wires together using an approved wire nut. See Figures D and E.

SAVE THESE INSTRUCTIONS

Fig. D

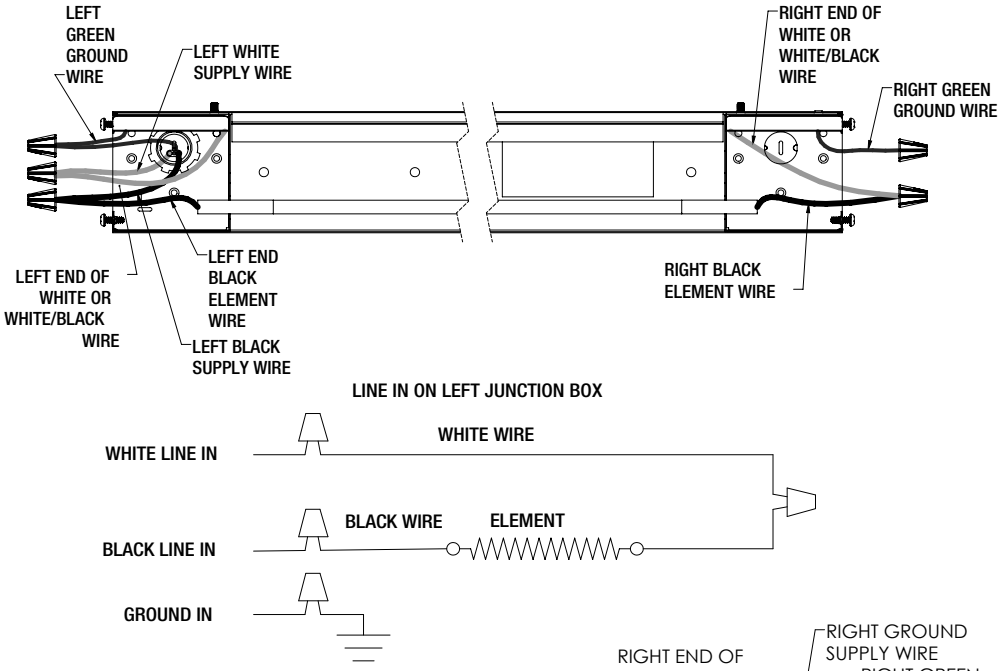

Fig. E

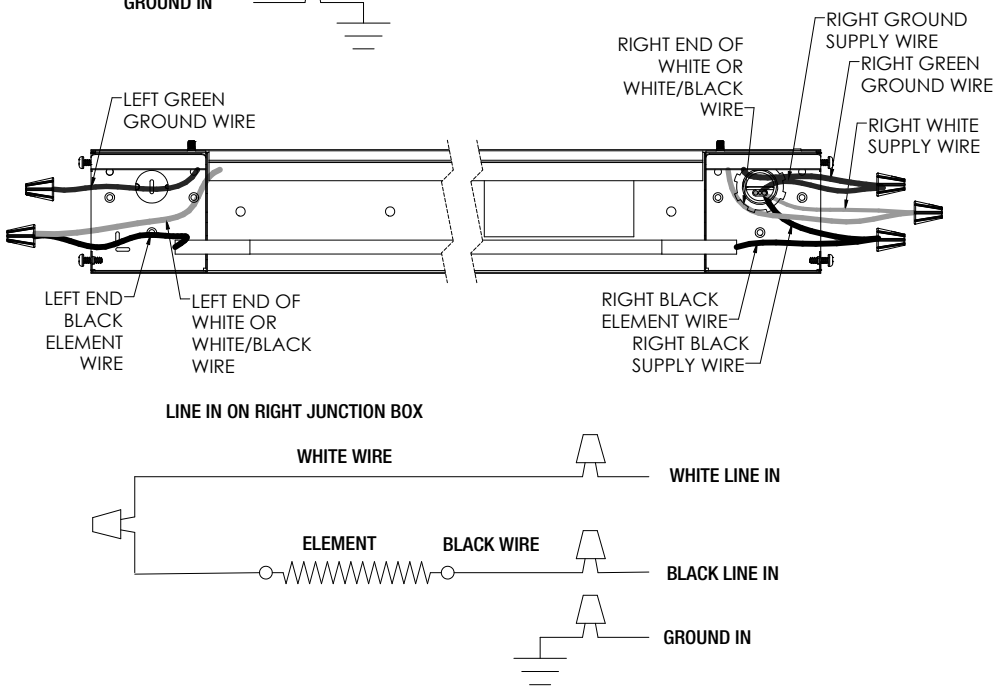

7. After wiring is complete, carefully press the electrical wires into the junction box, making sure not to pinch any wires between the junction box and the heating panel.

8. Install the end caps: Push the bottom edge of the aluminum heating panel towards the back panel, while installing the end caps and lightly tighten the 2 screws to secure it. Do Not Overtighten, as the aluminum heating panel will expand and contract during heating, requiring it to move freely. See Figure F.

Fig. F

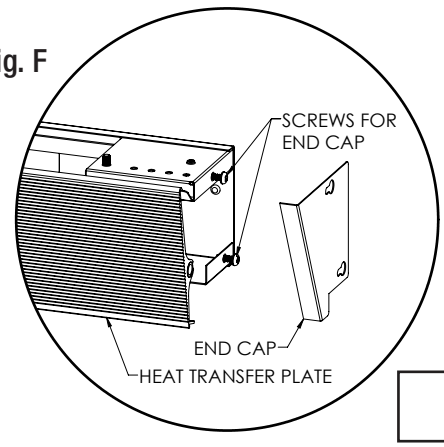

CAUTION

The heater should not be covered or blocked in any manner.

c UL us LISTED E21609

SAVE THESE INSTRUCTIONS

MAINTENANCE & WARRANTY

Following the guidlines herein listed will result in a maintenance-free heater. There are no moving parts or motors to maintain. Periodically dust the front panel with a dry cloth when turned off and completely cooled.
Do not use any cleaning chemicals as it will cause discoloration. The KCV Cove Heater carries a (2) year warranty from date of installation. Please refer to the manufacturer's warranty statement for further information.

GENERAL INFORMATION

Cove heaters are completely assembled and pre-wired. To prepare the heater for installation, carefully check the voltage to be used is the same as stated on the rating nameplate. Operating voltage can not exceed 5% of nameplate voltage. Operating heater above listed voltage ratings voids all gaurantees and warranties.

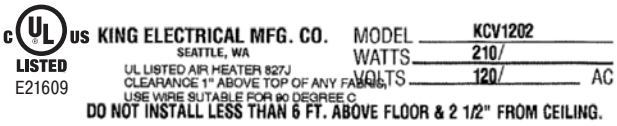

king

Smart Heating Solutions

SAVE THESE INSTRUCTIONS