PORTABLE HYDRAULIC DRUM DUMPER - HDD-72-15-P

APPROX WEIGHT: 960.34 lbs.
DOES NOT INCLUDE WEIGHT OF POWER OR PACKAGING!!!

*** ANY ADDITIONS, DELETIONS, OR OMISSIONS MUST BE CORRECTED ON THIS DRAWING AS THIS DRAWING WILL BE CONSIDERED ALL INCLUSIVE ***
ALL GRAPHICS PROVIDED ARE FOR REFERENCE ONLY. IF CERTAIN DIMENSIONS ARE CRITICAL PLEASE VERIFY THOSE DIMENSIONS WITH YOUR SALESPERSON

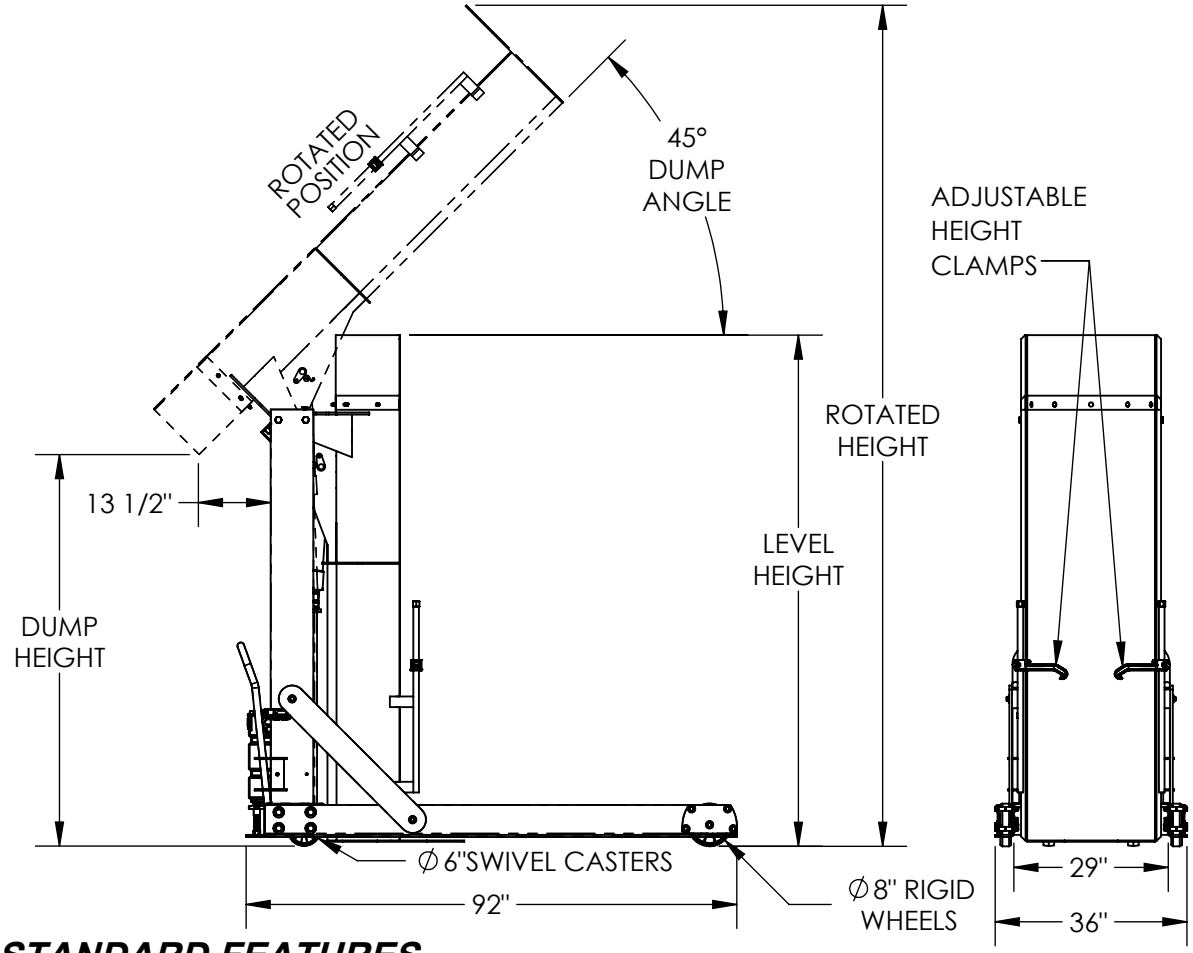

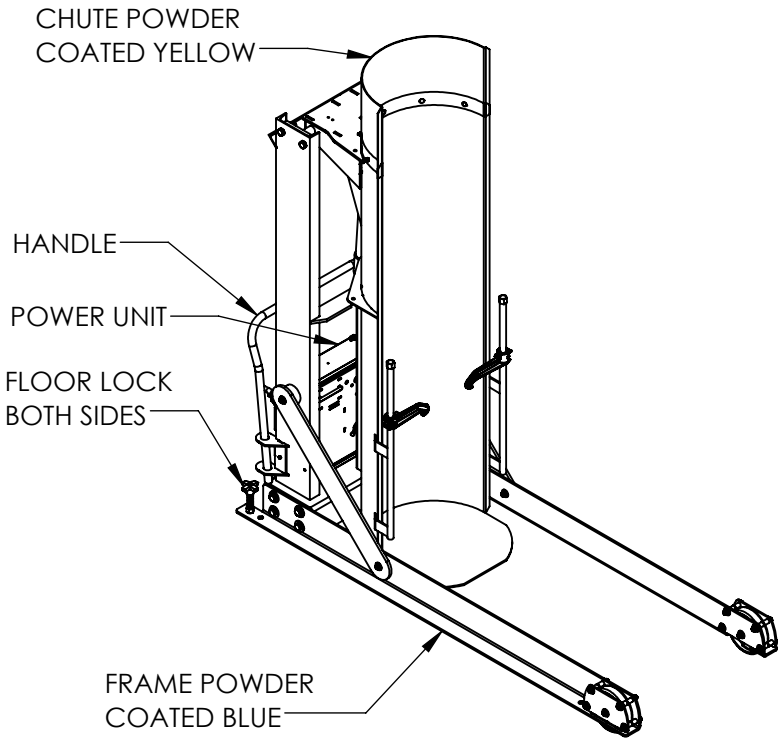

DIMENSION TOLERANCE ± 1/4"

STANDARD FEATURES

MODEL NUMBER IS HDD-72-15-P
DUMP HEIGHT IS 72"
MAX CAPACITY IS 1,500 LBS
OVERALL WIDTH IS 36"
OVERALL LENGTH IS 92"
LEVEL HEIGHT IS 96"
ROTATED HEIGHT IS 157 1/2"
DUMP ANGLE IS 45°
ACCEPTS DRUM SIZE: Ø16 1/2" TO Ø23 1/2" (ROUND) X 27 1/2" TO 39 1/2" TALL
ALL STEEL CONSTRUCTION
DURABLE BAKED IN POWDER COATED FINISH (BASE BLUE & CHUTE YELLOW)
2-FUNCTION HANDHELD CONTROL WITH 18"-90" COIL CORD
WARNING: CHECK STATE AND LOCAL CODES!!!

SPECIAL FEATURES

NONE

115V SINGLE PHASE AC POWER

CONTACT FACTORY FOR OTHER POWER OPTIONS

APPROVAL

I, THE UNDERSIGNED, AGREE THAT THE PRODUCT AS REPRESENTED SATISFIES DESIGN AND DIMENSION REQUIREMENTS. I ALSO ACKNOWLEDGE MY DUTY TO CONFIRM PRODUCT AND INSTALLATION COMPLIANCE WITH ALL APPLICABLE FEDERAL, STATE AND LOCAL REGULATIONS AND STANDARDS.

UNITS REQUIRING APPROVAL DRAWINGS OR MODIFIED ARE NON-RETURNABLE

[ ] As drawn [ ] As marked

Signed:_____ Date:_____

Printed Name:_____

LEAD TIME WILL START UPON RECEIPT OF SIGNED APPROVAL DRAWING

DISTRIBUTOR'S NAME: VESTIL MANUFACTURING		P.O.# X
		W.O.# X
DRAWN BY: CRM	DATE: 01/18/2017	SALES: X
REFERENCE: X	SCALE: 1:36	FILE NAME: 09-007-129-002
QUOTED LEAD TIME: X	QUOTE # X	