S-Series - 3.5/6.5 Cu Ft Abrasive Blasters

User's Manual

⚠ WARNING

Abrasive blasting can create dust that may contain toxic materials from abrasive material and the surface being blasted. NEVER use abrasives containing high amounts of crystalline silica including silica sand/beach sand for abrasive blasting. Airborne crystalline silica causes silicosis, a fatal respiratory disease. Abrasive blasting can create high levels of noise that may cause hearing damage. Always use proper safety equipment including respiratory protection, hearing protection, and comply with local, regional and national safety codes. Ensure all operators of the equipment are properly trained and everyone in the area including bystanders are protected from the hazards of abrasive blasting. The manufacturer, wholesaler and distributor assume no responsibility arising from the failure to comply with this warning.

⚠ WARNING

Read Manual

Failure to read, understand & follow **all** safety and operation procedures in this manual can cause serious injury or death. Manuals that are lost, incomplete, or damaged must be replaced immediately.

Manual P/N: PB-MAS001

Manual Revision: Nov 22

Copyright © 2022-2030 Pirate Brand®, All Rights Reserved

Using This Manual

Thank you for your purchase of a Pirate Brand® SPH or SPR Series Blaster. It is important to note that all Pirate Brand® blasting equipment is designed to be safe when used properly, however, misuse of any abrasive blasting equipment is dangerous and can result in the severe injury or death of the operator and others in the vicinity of the blasting equipment. In order to protect yourself and those around you, read and follow all sections of this manual & warning labels located on the blasting equipment.

Definition Of Terms Used In This Manual

Abrasive: A granular material used for blasting the surface of an object. Also referred to as "Media."

Blow-down: The automatic or manual release of air from a pressurized vessel. Also referred to as "Depressurize."

Control Handle: A required device that allows the blaster to be remotely started and stopped.

Depressurize: The automatic or manual release of air from a pressurized vessel. Also known as "Blow-down".

Pressure Hold System: Any blasting system in which the Pressure Vessel remains pressurized when the control handle is released. Also known as a Manual Blow-down System.

Pressure Release System: Any blasting system in which the Pressure Vessel is automatically depressurized when the control handle is released. Also known as an Automatic Blow-down System.

Pressure Vessel: The enclosed area of the blaster in which abrasive is contained and filled with pressurized air when blasting.

Pressurize: To fill the pressure vessel with compressed air.

Properly Trained: A person who can be considered "properly trained" must have successfully completed a sandblasting training course that focuses on the safe operation of stationary or portable abrasive blasters in the 1.5 - 20 cu. ft. capacity range. They must also have read and understood this manual in its entirety.

Silica: A hazardous substance which is contained in many naturally occurring abrasives. Dust produced by blasting with abrasives containing silica can cause respiratory disease. Do not use abrasive containing silica under any circumstance, even when respiratory protective equipment is being used.

Safety Symbols

The safety symbols shown below exist for the safety and protection of the operator and those in the vicinity of the Abrasive Blaster. The descriptions below explain how they are used in relation to the blasting equipment.

OR

WARNING: This symbol calls attention to a potentially hazardous situation that could result in serious injury or death if the instructions associated with the symbol are not followed. The warning triangle will be displayed throughout the manual to denote instructions to which special attention should be paid.

OR

DANGER: This symbol calls attention to a potentially hazardous situation that **WILL** result in serious injury or death if the instructions associated with the symbol are not followed. The warning triangle will be displayed throughout the manual to denote instructions to which special attention should be paid.

Copyright © 2022-2030 Pirate Brand®, All Rights Reserved

⚠ WARNING

• All persons who will be operating or will be in the vicinity of the Abrasive Blaster during its operation must receive proper training on how to safely operate the equipment and be informed of the potential hazards involved. In addition to proper training, all persons who will be operating or will be in the vicinity of the Abrasive Blaster during its operation must read, understand and follow all procedures described in the user's manual. For replacement manuals, please contact your distributor or visit www.pirate-brand.com.

• Respiratory protection is mandatory for all persons operating or located in the vicinity of the Abrasive Blaster. Follow all OSHA and NIOSH requirements for breathing equipment and supplied air standards.

• Pressurized Vessels contain large amounts of stored energy and can cause severe injury or death if safety procedures are not followed. **Never** perform maintenance or attempt to open a Pressure Vessel for any reason while it is Pressurized. **Always** Depressurize and properly disconnect equipment from its air source before performing any maintenance. **Do not** modify, grind or weld on the pressure vessel for any reason. Doing so will void the ASME certification. **Do not** use damaged pressure vessels.

• The use of proper remote control systems (commonly referred to as Deadman controls) are required when using abrasive blasters. **Never** operate the Abrasive Blaster without remote controls. **Never** use bleeder type control handles, such as Clemco® or A-BEC® style handles, with SPH or SPR series blasters as they can cause a hazardous situation where the blaster will not shut off when the handle is released.

• All persons who will be operating or will be in the vicinity of the Abrasive Blaster during its operation must protect themselves with the proper safety equipment and use of common sense. Safety equipment including but not limited to Hearing, Eye, Body and Lung protection are required. Abrasive blasters and the objects being blasted can be heavy and can lead to severe injury or death if they fall over. Always follow all safety requirements of OSHA and NIOSH.

• Use only Genuine Pirate Brand® replacement parts when performing maintenance on the Abrasive Blaster. **Do not** modify the equipment for any reason. Use of modified or non-Pirate Brand® parts can cause an unsafe situation and will void your warranty.

• **Never** use malfunctioning or damaged equipment. Before each use, inspect the Abrasive Blaster for proper function.

• Supply only cool, dry, compressed air that is free of debris to the Abrasive Blaster. Moisture or debris that reaches the remote control system can cause an unsafe situation. **Do not** supply compressed air to the blaster that exceeds 150 psi.

• **Do not** use abrasive blasters in areas that could be considered a hazardous location as described in the National Electric Code NFPA 70, Article 500. **Never** use the Abrasive Blaster in wet environments. **Always** connect electrically controlled abrasive blasters to a Ground Fault Circuit Interrupter (GFCI).

Copyright © 2022-2030 Pirate Brand®, All Rights Reserved

Table Of Contents

Using This Manual 2
Definition Of Terms 2
Safety Symbols 2
WARNINGS 3
Safety Label Information 5
How SPR Systems Work 6
How SHORT CYCLE Systems Work 7
How SPH Systems Work 8
Door Interlock Kit Instructions 9
OPERATING PROCEDURES 10
Set-Up 10
Before You Blast 11
Blasting 12
MAINTENANCE PROCEDURES 14
TROUBLESHOOTING 15
Warranty 18
Pressure Vessel Parts Lists 19
Pipe String Parts Lists 20
SPR SERIES - Standard Pneumatic Controls 20 - 21
SPR SERIES - Standard Electric Controls 22 - 23
SPR SERIES - Pneumatic Abrasive Cut-Off Controls 24 - 25
SPR SERIES - Electric Abrasive Cut-Off Controls 26 - 29
SHORT-CYCLE - Standard Pneumatic Controls 30 - 31
SHORT-CYCLE - Standard Electric Controls 32 - 33
SHORT-CYCLE - Pneumatic Abrasive Cut-Off Controls 34 - 35
SHORT-CYCLE - Electric Abrasive Cut-Off Controls 36 - 37
SPH SERIES - Standard Pneumatic Controls 38 - 39
SPH SERIES - Standard Electric Controls 40 - 41
SPH SERIES - Pneumatic Abrasive Cut-Off Controls 42 - 43
SPH SERIES - Electric Abrasive Cut-Off Controls 44 - 45
Fast-Stop™ Systems 46
Control Handle Parts Lists 48
Valve Parts Lists 49
Blasting Set-Up 56
Available Accessories 58
Blasting Charts 60

Distributed By:

Contact Info:
For manual updates visit the Pirate Brand® website at:

WWW.PIRATE-BRAND.COM

Copyright © 2022-2030 Pirate Brand®, All Rights Reserved

Warning Label Locations

1 - Explosion Hazard (X2)
2 - Severing Hazard (X2)
3 - Read Manual
4 - Crush Hazard
5 - Exhaust Hazard
6 - Breathing Hazard
7 - Hearing Hazard
8 - Eye Hazard
9 - Pressurized Hose
10 - Spray Hazard
11 - WARNING Label
12 - Drain Label
13 - Series Label
14 - Inlet Label
15 - Outlet Label
16 - 12VDC Label
17 - Pirate Brand® Label

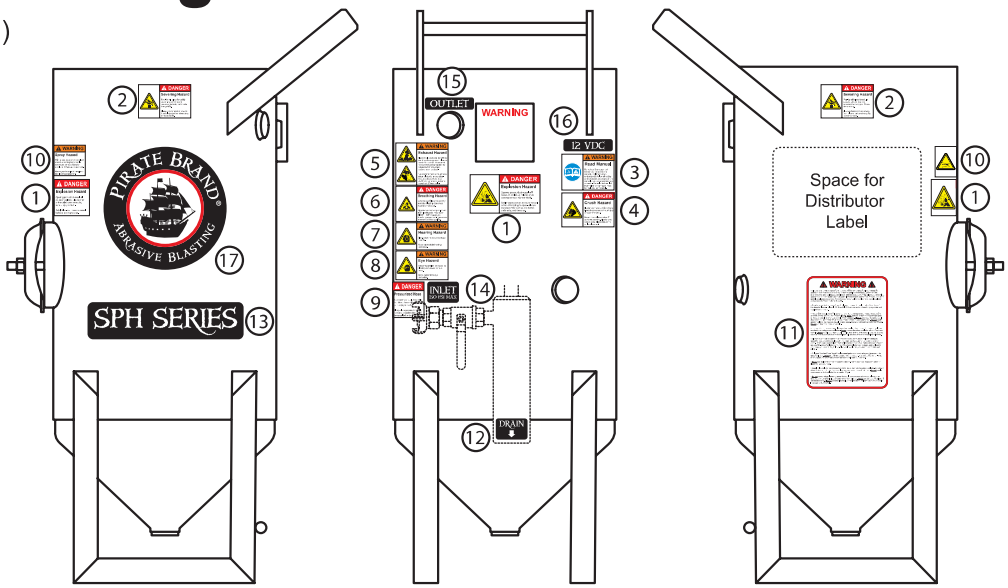

Labels must be replaced when they are no longer readable!

Replacement Label Pack P/N: PB-LPS001

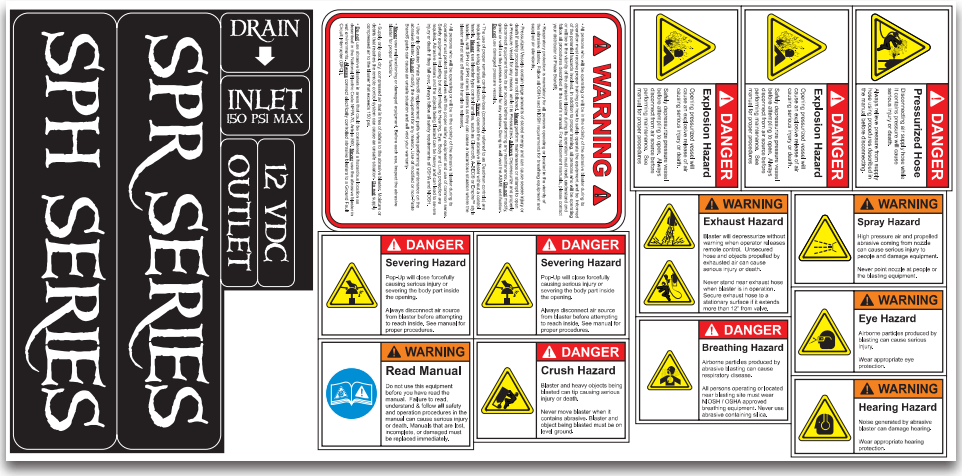

Instructions For Installing Replacement Label Pack

1. Completely remove old label and clean area thoroughly before applying new label.

2. Apply replacement labels in locations as described above or as close as possible if area is obstructed. #14 "Inlet" & #9 "Pressurized Hose" labels should be placed as close to the inlet coupling as possible. This location will vary depending on model and optional accessories installed.

3. Exhaust Hazard Label (#5) Is only to be used with SPR Series Abrasive Blasters. **DO NOT** apply to SPH Series Abrasive Blasters.

4. 12 VDC Label (#16) is only to be used on electric remote controlled systems. **DO NOT** apply label to systems with pneumatic remote controls.

5. Choose correct Series Label (#13), **DO NOT** apply both series labels. "SPR Series" labels are for pressure release systems, "SPH Series" labels are for Pressure Hold systems.

Copyright © 2022-2030 Pirate Brand®, All Rights Reserved

How SPR Systems Work
(Pressure Release)

WARNING: This section of the manual is designed to give you a general understanding of how the Abrasive Blaster functions. **All** sections of this manual must be read and understood before operating the equipment.

ADDING ABRASIVE
Abrasive is added through the hole in the top of the Abrasive Blaster where the Pop-up and its seat are located. When abrasive is added, it flows down through the hole, around the Pop-up, and down to the bottom of the pressure vessel where it will exit through the Metering Valve when blasting is started.

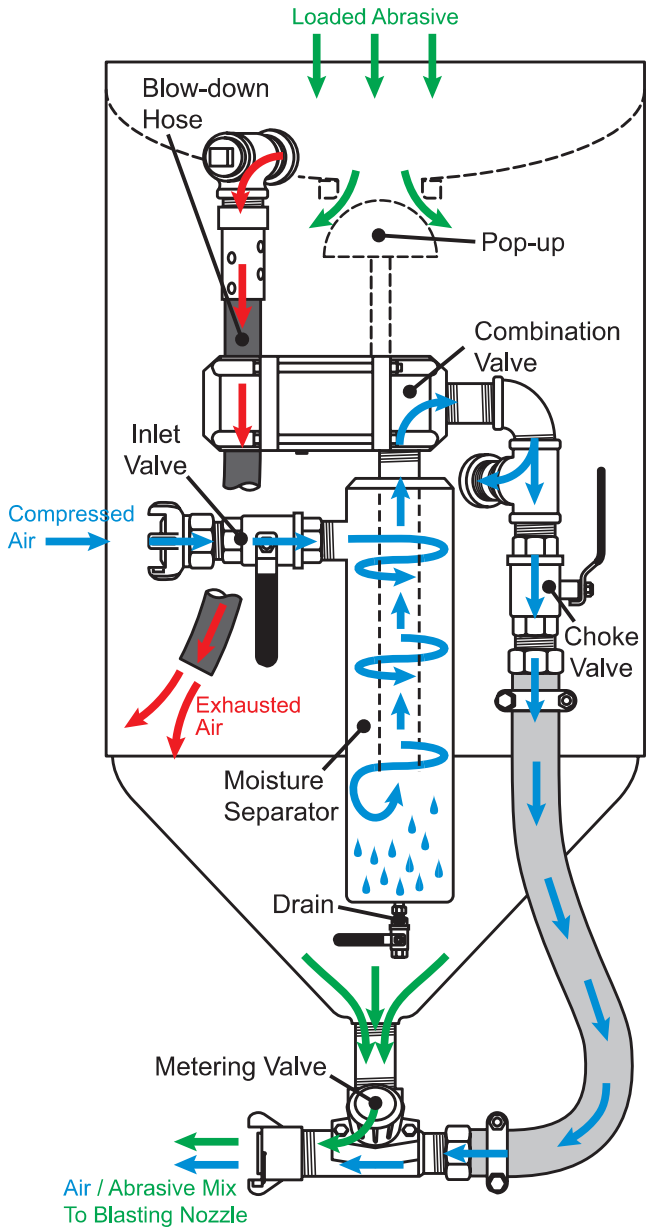

PRESSURIZATION
When a compressed air source (such as an air-compressor) is connected to the inlet of the Abrasive Blaster and the Inlet Valve is opened, compressed air flows through the Moisture Separator and reaches the Combination Valve where it is stopped. When the control handle is activated, the Combination Valve pinches the Blow-down Hose and air flows through the Combination Valve into the pressure vessel causing the Pop-up (located internally) to seal against its seat. The pressure vessel is now sealed and pressurized. Air will also continue past the Choke Valve to the Metering Valve where it is mixed with abrasive. The mixture of compressed air will now exit the Abrasive Blaster through a blast hose and nozzle connected to the coupling on the Metering Valve and blasting begins. It is important to note that in SPR abrasive blasters equipped with MPV Metering Valves, some abrasive will collect at the base of the valve causing the blast hose to pulsate and spray abrasive erratically for a short time when blasting is started. This is normal and will not hurt the Abrasive Blaster.

DEPRESSURIZATION (BLOW-DOWN)
When the control handle is released in a pressure release (SPR) system, the Combination Valve automatically closes stopping the flow of compressed air and releasing the Blow-down Hose. The compressed air remaining in the pressure vessel is released through the Blow-down Hose and blasting ends.

- Flow of Compressed Air
- Flow of Abrasive
- Flow of Exhaust Air During Blow-down

Copyright © 2022-2030 Pirate Brand®, All Rights Reserved

How Short-Cycle™ Systems Work
(Remote Blow-Down)

WARNING: This section of the manual is designed to give you a general understanding of how the Abrasive Blaster functions. **All** sections of this manual must be read and understood before operating the equipment.

ADDING ABRASIVE
Abrasive is added through the hole in the top of the Abrasive Blaster where the Pop-up and its seat are located. When abrasive is added, it flows down through the hole, around the Pop-up, and down to the bottom of the pressure vessel where it will exit through the Metering Valve when blasting is started.

PRESSURIZATION / DEPRESSURIZATION (BLOW-DOWN)
Short Cycle systems feature a Remote Blow-Down Palm Button which is used to pressurize/depressurize the Abrasive Blaster.

When a compressed air source (such as an air-compressor) is connected to the inlet of the Abrasive Blaster and the Inlet Valve is opened, compressed air flows through the Moisture Separator (if equipped) and reaches the Combination Valve where it is stopped. When the Blow-Down Palm Button is pulled out, the Combination Valve pinches the Blow-down Hose and air flows through the Combination Valve into the pressure vessel causing the Pop-up (located internally) to seal against its seat. The pressure vessel is now sealed, pressurized and ready to blast.

When the Blow-Down Palm Button is pressed, the Combination Valve automatically closes stopping the flow of compressed air and releasing the Blow-Down Hose. The compressed air remaining in the pressure vessel is released through the Blow-down Hose and the Abrasive Blaster is depressurized.

BLASTING
Blasting can only take place in Short Cycle systems when the Blow-Down Palm Button is in the pulled position. When the control handle is activated, the Automatic Air Valve and Metering Valve open allowing compressed air & abrasive to flow and mix. The mixture of compressed air and abrasive will now exit the Abrasive Blaster through a blast hose and nozzle connected to the coupling on the Metering Valve and blasting begins.

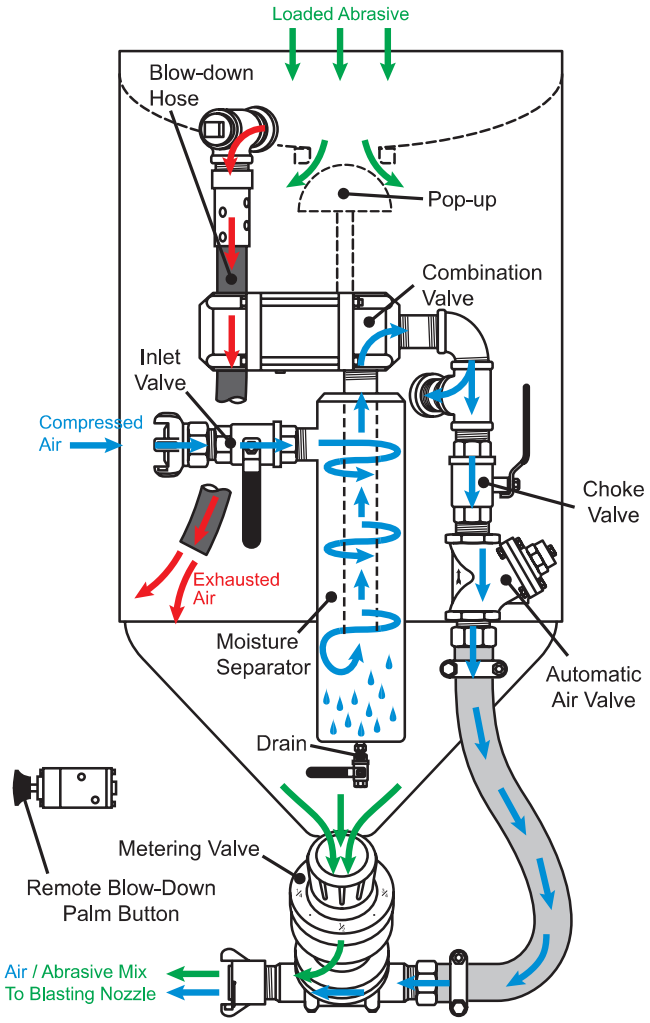

- Flow of Compressed Air
- Flow of Abrasive
- Flow of Exhaust Air During Blow-down

Copyright © 2022-2030 Pirate Brand®, All Rights Reserved

How SPH Systems Work
(Pressure Hold)

WARNING: This section of the manual is designed to give you a general understanding of how the Abrasive Blaster functions. **All** sections of this manual must be read and understood before operating the equipment.

ADDING ABRASIVE
Abrasive is added through the hole in the top of the Abrasive Blaster where the Pop-up and its seat are located. When abrasive is added, it flows down through the hole, around the Pop-up and, down to the bottom of the pressure vessel where it will exit through the Metering Valve when blasting is started.

PRESSURIZATION
Before pressurization can take place in a pressure hold system, the Blow-down Valve must be closed. Then, when a compressed air source (such as an air-compressor) is connected to the inlet of the Abrasive Blaster and the Inlet Valve is opened, compressed air can flow through the Moisture Separator and into the pressure vessel causing the Pop-up (located internally) to seal against its seat allowing the pressure vessel to become pressurized. When the control handle is activated, the Auto Air Valve and Metering Valve open allowing compressed air & abrasive to flow and mix. The mixture of compressed air and abrasive will now exit the Abrasive Blaster through a blast hose and nozzle connected to the coupling on the Metering Valve and blasting begins.

DEPRESSURIZATION (BLOW-DOWN)
When the control handle is released in a pressure hold (SPH) system, the pressure vessel remains filled with compressed air. The compressed air remaining in the pressure vessel is released when the inlet valve is manually closed and the blow-down valve is manually opened.

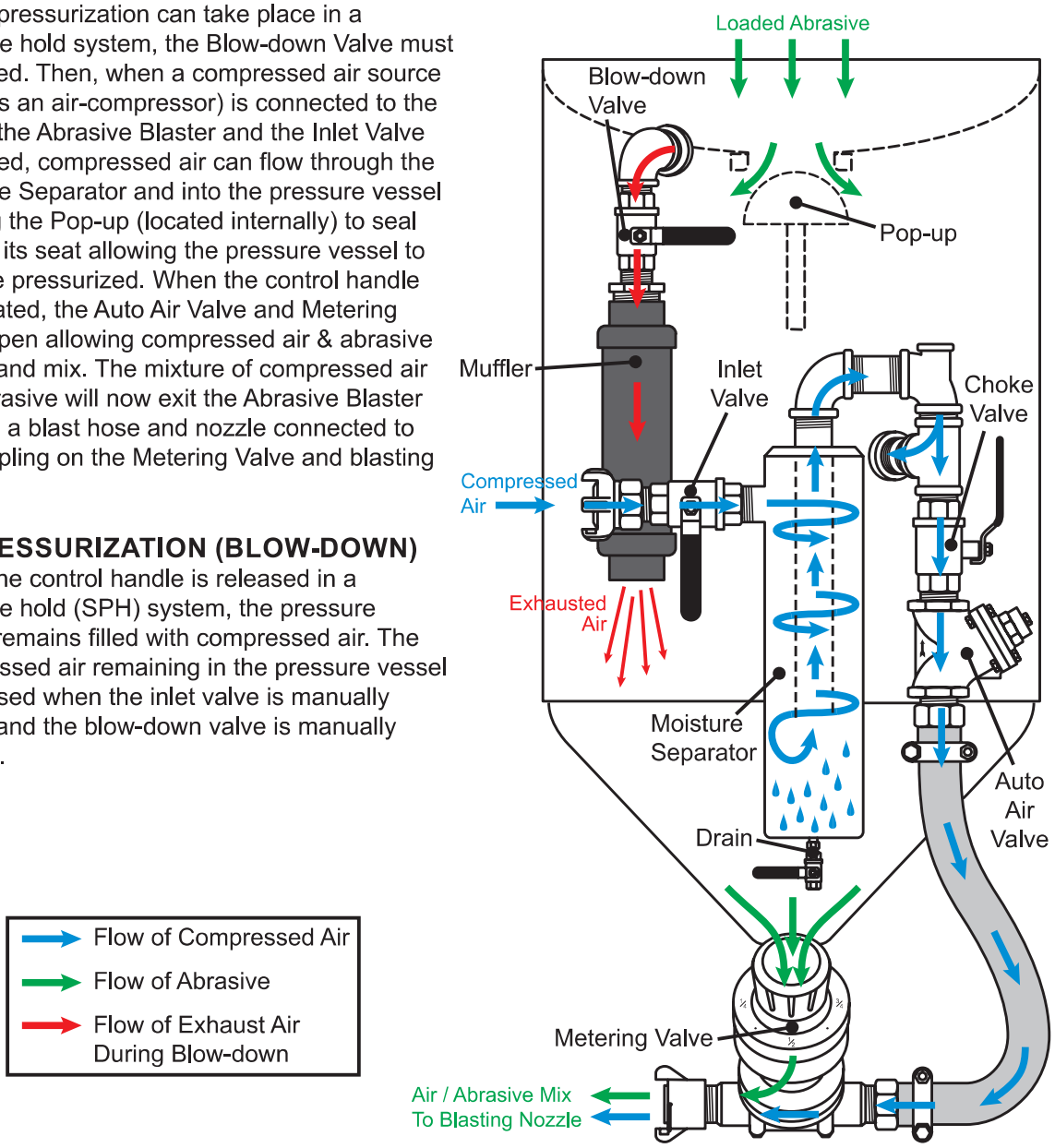

Copyright © 2022-2030 Pirate Brand®, All Rights Reserved

Door Interlock Kits

WARNING: It is important when installing a door interlock kit that it is installed at the proper position on the abrasive blaster control system. Use the diagrams on this page when installing a door interlock system.

Pressure Release Systems

Pneumatic Controls

Note: Pressure release systems with pneumatic controls will require the addition of a 90 micron strainer. Part Number - 888-2301-90290PB

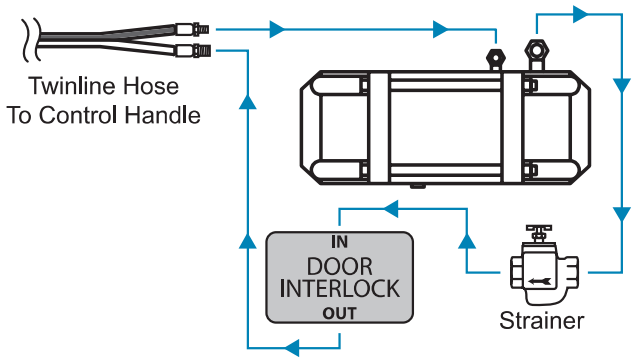

Electric Controls

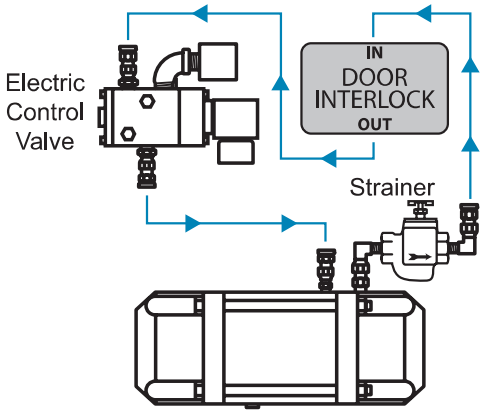

Short Cycle Systems

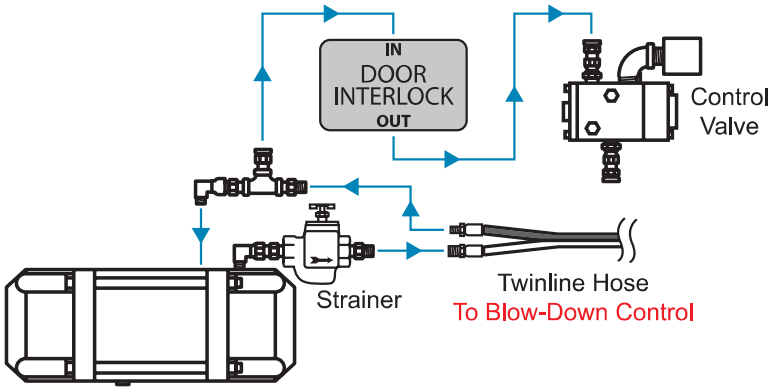

Pressure Hold Systems

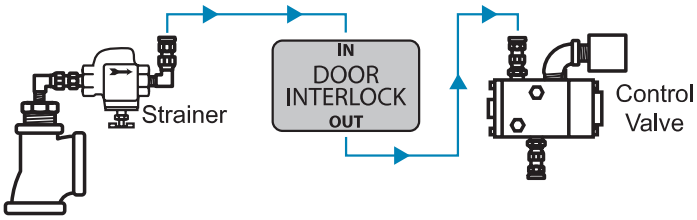

Copyright © 2022-2030 Pirate Brand®, All Rights Reserved

Operating Procedures

WARNING: The Procedures provided in the Operating Procedures section of the manual are designed to provide basic information on how to safely operate the features of Pirate Brand® SPH/SPR Series Abrasive Blasters. Only personnel thoroughly trained in abrasive blasting should operate the Abrasive Blaster.

Setting-Up The Blaster

INSPECT PRESSURE VESSEL

When you receive your Abrasive Blaster, remove the Handway Assembly and check for foreign items that may have fallen into the Abrasive Blaster through the Pop-up opening. Remove any foreign materials and reinstall the Handway Assembly.

DANGER: Never perform any maintenance or attempt to open the Abrasive Blaster in any way while it is pressurized. The violent release of compressed air and propelled objects will cause serious injury or death.

SECURE BLOW-DOWN HOSE (STATIONARY BLASTERS)

The longer Blow-down Hose used on stationary Abrasive Blasters must be secured to a stationary surface before using the Abrasive Blaster. If not secured the Blow-down Hose will whip around violently when exhausting. Choose an appropriate location to direct exhausted air that is not near personnel.

DANGER: Blow-down hoses that extend more than 12" from the Combination Valve must be secured to a stationary surface to prevent injury.

RE-TIGHTEN HANDWAY ASSEMBLY

After the Abrasive Blaster has been pressurized for the first time, tighten the nut on the Handway Assembly. Tightening the nut on the Handway Assembly should also be done any time after the handway has been removed for maintenance before and after the next pressurization.

DANGER: Never perform any maintenance or attempt to open the Abrasive Blaster in any way while it is pressurized. The violent release of compressed air and propelled objects will cause serious injury or death.

PURGE AIR SUPPLY HOSE

Before connecting the Air Supply Hose to the Abrasive Blaster, purge the hose of any moisture or foreign debris. Standing water or moisture in the air line will cause degraded performance of the Abrasive Blaster. Air supplied to the Abrasive Blaster must be clean, dry and cool.

ADJUST UMBRELLA (IF EQUIPPED)

On stationary abrasive blasters equipped with an Umbrella, adjust the Umbrella so there is a 1/4" gap between the bottom of the Umbrella and the abrasive heaped around the Pop-up entry. Start with the umbrella at a height of about 2" and pour your abrasive of choice onto the center of the umbrella. Keep adding abrasive until a mound forms over the umbrella and around the opening and the abrasive starts falling into the pressure vessel. Measure the distance between the bottom of the umbrella and the mound forming around the Pop-up opening and lower the umbrella so a 1/4" gap is achieved. Different abrasives require different heights, so readjust as needed.

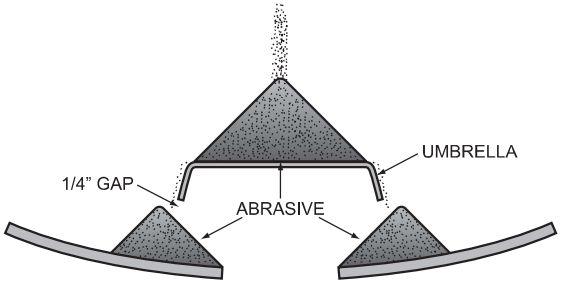

DANGER: Never reach into the Pop-up opening while filling the Abrasive Blaster. It can close without warning causing severe injury or death.

ATTACH REMOTE CONTROL HANDLE

Attach the Remote Control Handle to the Blast Hose near the Nozzle with hose clamps or heavy wire ties. Form a loop of Twinline/Control Cord that comes 6" away from the Blast Hose, runs 6" parallel to the Blast Hose, and comes 6" back to the Blast Hose. Using duct tape, attach the Twinline/Control Cord to the Blast Hose where the loop ends by wrapping the tape around the Twinline/Control Cord twice and then around the Blast Hose. This creates a strain-relief attachment and is only necessary on the first connection near the Control Handle. Starting from the Nozzle end of the Blast Hose, attach the Twinline/Control Cord to the blast hose by wrapping duct tape around both every 3 feet.

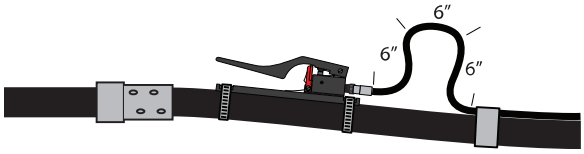

Copyright © 2022-2030 Pirate Brand®, All Rights Reserved

Operating Procedures

Before You Blast

PRE-BLAST CHECK

Before each use of the Abrasive Blaster, it must be checked to ensure it is in a safe condition to be used. Closely examine all components of the Abrasive Blaster for signs of excessive wear, worn out seals and hoses, or damaged components. If any component of the Abrasive Blaster is found to be damaged or worn, it must be replaced before blasting.

WARNING: Never use an Abrasive Blaster if any components are damaged or worn. Damaged or worn parts must be replaced before use.

ADDING ABRASIVE

Before filling the Abrasive Blaster, make sure the inlet valve is closed and the pressure vessel is in a depressurized state. Abrasive is added by pouring it into the top of the Abrasive Blaster where it can flow around the Pop-up and into the pressure vessel. Do not overfill the Abrasive Blaster. Do not allow foreign materials to enter the Abrasive Blaster. It is recommended that a screen be used to prevent foreign objects from entering the Abrasive Blaster.

DANGER: Never reach into the Pop-up opening while filling the Abrasive Blaster. It can close without warning causing severe injury or death.

WARNING: Pirate Brand® Abrasive Blasters may not be used with abrasives containing silica. Never use abrasives containing silica.

WARNING: Never fill the abrasive blaster with the inlet valve in the open position. Always close the inlet valve before filling.

WARNING: Electrically conductive abrasives may not be used with the abrasive blasters using Electric Remote Control Systems without changing to sealed connectors.

WARNING: Never attempt to move or transport the Abrasive Blaster when it contains Abrasive.

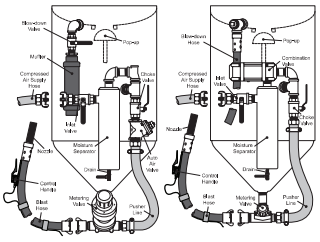

See page 13 for diagram of blaster components

REMOTE CONTROL SYSTEM

Abrasive Blasters must use a Remote Control System (commonly known as deadman) to start and stop abrasive blasting. Remote Control Systems can be electric or pneumatic.

Electric: Connect the Remote Control Handle to the Abrasive Blaster's female twist-lock connector. Connect a 12 VDC power source (12V Battery or Optional 120 VAC to 12 VDC converter) to the Abrasive Blaster's male connector.

Pneumatic: Connect the Remote Control twinline hose to the Abrasive Blaster using the supplied threaded or quick-disconnect fittings. The twinline hose is supplied with different size fittings on each of the 2 lines to prevent them from being connected to the Abrasive Blaster incorrectly. Do not modify or reverse these fittings. It is not recommended that Pneumatic Remote Control Systems are used when the Blast Hose length will be longer than 100 feet.

WARNING: Never operate the Abrasive Blaster without a Remote Control System.

WARNING: Never use bleeder type Remote Control Handles such as Clemco® or A-BEC® style handles with Pirate-Brand® SPH/SPR Series equipment as they may cause the Abrasive Blaster to start without warning or to not stop the Abrasive Blaster when released.

WARNING: Never reverse or modify pneumatic Remote Control twinline hose fittings.

DANGER: Always use caution around electric sources to avoid electric shock. Do not operate electrical remote controlled Abrasive Blasters in wet or other hazardous environments

CONNECTING HOSES

Before connecting hoses to the Abrasive Blaster, make sure the Inlet Valve is closed and the compressed air supply is shut off. Connect the hose coming from the compressed air supply to the inlet on the Abrasive Blaster and secure with safety clips. Connect the blast hose to the coupling on the Metering Valve at the base of the Abrasive Blaster and secure with safety clips or mechanics/safety wire when using BIG GUN couplings.

WARNING: Always use safety devices like clips and whip-checks (safety cables) at hose connections. BIG GUN couplings require the use of safety/mechanics wire for proper securing.

Copyright © 2022-2030 Pirate Brand®, All Rights Reserved

Operating Procedures

Blasting

PRESSURIZING THE ABRASIVE BLASTER

Before pressurizing the Abrasive Blaster make sure the following conditions occur:

- All "BEFORE YOU BLAST" procedures have been followed.
- The Inlet Valve is closed.
- The Blow-down Valve is closed (SPH systems only).
- The Remote Control Handle is released.
- All hose connections are secure and have a safety clip or safety/mechanics wire installed.
- The Abrasive Blaster is set up in a safe and level location where all people in the vicinity are aware of its presence.
- All necessary safety equipment is present and being worn by all people in the vicinity of the Abrasive Blaster.
- Only personnel who have been thoroughly trained and have read and understand the manual are in the vicinity of the Abrasive Blaster

When these conditions are met, turn on the compressed air source and open the Inlet Valve on the Abrasive Blaster. The Abrasive Blaster is now ready to begin blasting.

DANGER: Never perform any maintenance or attempt to open the Abrasive Blaster in any way while it is pressurized. The violent release of compressed air and propelled objects will cause serious injury or death.

DANGER: Never supply compressed air exceeding 150 PSI (10.3 BAR) to the Abrasive Blaster.

WARNING: Blast Hose may kick back when Remote Control Handle is activated. Be prepared and brace yourself for kick back. Blasters with MPV Metering Valves will normally kick back erratically for a short time when started.

WARNING: All those who will be in the area while blasting is to occur must be properly trained, read the manual, and be wearing safety equipment to protect from the hazards described by the WARNING and DANGER labels located on the Abrasive Blaster. If any labels are worn or missing they must be replaced.

WARNING: 100 PSI Minimum. Failure to provide a constant air supply of at least 100 PSI can cause excessive wear to multiple components and the control system to operate improperly.

USING THE ABRASIVE BLASTER

After pressurizing the Abrasive Blaster, it is ready to begin blasting. Press safety button or push down safety flap and squeeze the Remote Control Handle to start the flow of abrasive and compressed air. Adjustments to the air/abrasive mixture can be made by turning the handle on the Metering Valve. There will be a delay between a change made at the Metering Valve and what comes out of the Nozzle depending on the length of Blast Hose being used. Adjustments to the Metering Valve can only be made when Abrasive Blaster is not in operation.

To stop the flow of compressed air and abrasive, release the Remote Control Handle and blasting will stop after a short time. How long it takes for blasting to stop will depend on the length of Blast Hose being used. On Pressure Release (SPR) Abrasive Blasters, the pressure vessel will automatically exhaust through the Blow-Down Hose causing a rush of compressed air that can propel any loose objects, debris or spilled abrasive at nearby personnel. For this reason, personnel must not be located near a Pressure Release (SPR) Abrasive Blaster when blasting is taking place.

DANGER: Airborne particles produced by abrasive blasting can cause respiratory disease. All persons operating or located near the blasting site must wear approved NIOSH / OSHA approved breathing equipment. Never use abrasive containing silica.

DANGER: Never stand near a Pressure Release (SPR) Abrasive Blaster when it is in operation. The release of the Remote Control handle will cause a sudden and violent release of compressed air from the exhaust hose without warning. Only Adjust the Metering Valve after the Abrasive Blaster has completely depressurized.

WARNING: Only personnel thoroughly trained in abrasive blasting should operate the Abrasive Blaster. This manual only provides basic information on how to safely operate the features of Pirate Brand® SPH/SPR Series Abrasive Blasters.

WARNING: Never point the blast Nozzle at yourself, other people, or the Abrasive Blaster.

WARNING: Never use the abrasive blaster without a nozzle securely installed in the blast hose nozzle holder.

WARNING: The Choke Valve must be completely open when blasting or damage to equipment will occur.

Copyright © 2022-2030 Pirate Brand®, All Rights Reserved

Operating Procedures

Blasting

DRAINING THE MOISTURE SEPARATOR

During blasting, the Moisture Separator must be periodically drained. The best way to accomplish this is to leave the drain valve slightly open all the time so it constantly leaks air and forces moisture out.

WARNING: The Abrasive Blaster must be supplied with clean, cool, dry compressed air in order to function properly. The included Moisture Separator on the Abrasive Blaster may not be sufficient to achieve this depending on the quality of the air being supplied.

SHUTTING DOWN THE ABRASIVE BLASTER

When blasting is complete, the Abrasive Blaster will need to be shut down. Make sure the Remote Control Handle is released then close the Inlet Valve. Non Short-Cycle Pressure Release (SPR) Abrasive Blasters will already be depressurized. To depressurize Short-Cycle blasters, activate the remote mounted blow-down button. To depressurize Pressure Hold (SPH) Abrasive Blasters, slowly open the Blow-down Valve to allow the compressed air stored in the Abrasive Blaster to escape.

WARNING: Never operate a Pressure Hold (SPH) Abrasive Blaster without a muffler on the Blow-down valve. Without the muffler, the sudden release of compressed air can cause severe injury.

DISCONNECTING AIR SUPPLY HOSE

After the Abrasive Blaster has been depressurized, and the Inlet Valve has been closed, the Compressed Air Supply Hose may still contain pressure which must be released before disconnecting the hose. To do this shut off the compressed air at its source, and open the Drain Valve on the Abrasive Blaster. Slowly open the inlet valve on the Abrasive Blaster. The compressed air stored in the Compressed Air Supply Hose can now escape through the Drain Valve. When you no longer hear air escaping through the drain valve, squeeze the Compressed Air Supply Hose to confirm the absence of compressed air. After confirming the absence of compressed air in the Compressed Air Supply Hose it is ready to be disconnected.

DANGER: Never disconnect any compressed air supply hose without first performing the "DISCONNECTING AIR SUPPLY HOSE" procedure described above. Failure to do so can cause the hose to blow off violently injuring or killing nearby people.

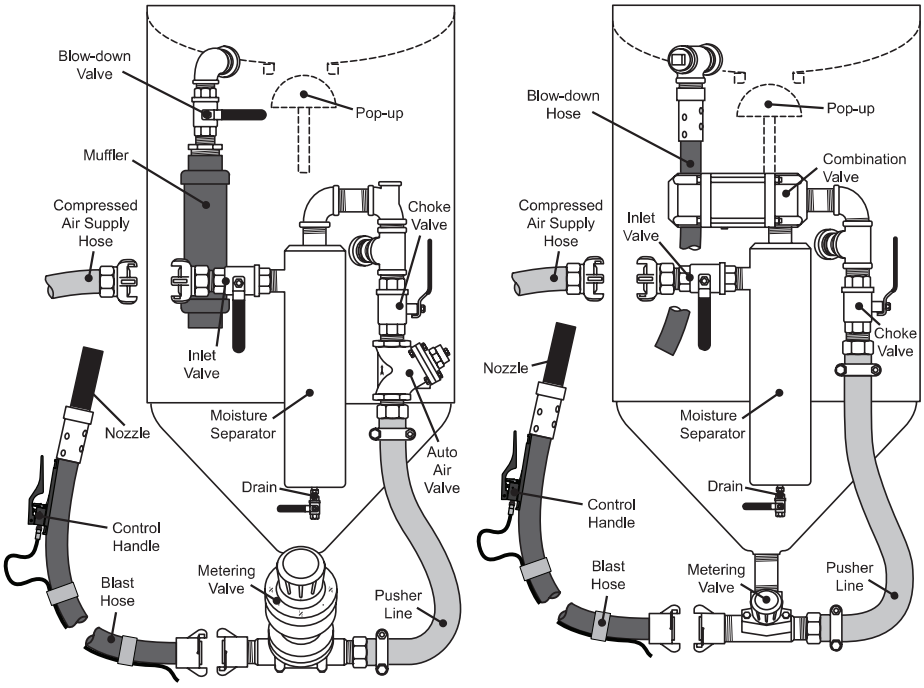

Copyright © 2022-2030 Pirate Brand®, All Rights Reserved

Maintenance Procedures

DANGER: Never perform any maintenance or attempt to open the Abrasive Blaster in any way while it is pressurized. The violent release of compressed air and propelled objects will cause serious injury or death.

WARNING: Maintenance procedures are to be performed by experienced qualified personnel only. Failure to perform maintenance procedures correctly at the intervals specified below can lead to performance problems and equipment failure, and will void the equipment warranty.

Maintenance Schedule

Procedure To Be Performed	Maintenance Interval
1 - Inspect Personal Protective Equipment (PPE) Including but not limited to: Respirators, Airline Filters, Carbon-Monoxide Monitors, Hearing Protection, Eye Protection, Foot Protection, Protective Clothing & Gloves Reference www.osha.gov 29 CFR 1910.132 - General Requirements (PPE) 29 CFR 1910.133 - Eye (PPE) 29 CFR 1910.134 - Respiratory (PPE) 29 CFR 1910.136 - Feet (PPE) 29 CFR 1910.138 - Protective Clothing & Gloves (PPE) 29 CFR 1926.101 - Hearing (PPE)	**Every 8 Hours Of Use**
2 - Inspect Remote Control Handles & Control Hose/Cord	**Every 8 Hours Of Use**
3 - Inspect Blast Hose, Couplings & Gaskets	**Every 8 Hours Of Use**
4 - Inspect Blasting Nozzle	**Every 8 Hours Of Use**
5 - Inspect Air Hose, Couplings & Gaskets	**Every 8 Hours Of Use**
6 - Inspect & Clean Blow-Down Muffler (If Equipped)	**Every 40 Hours Of Use**
7 - Inspect Blow-Down Hose Assembly (If Equipped)	**Every 200 Hours Of Use**
8 - Inspect Pop-Up & Pop-Up Gasket	**Every 200 Hours Of Use**
9 - Service Metering Valve	**Every 600 Hours Of Use**
10 - Service Automatic Air Valve (If Equipped)	**Every 600 Hours Of Use**
11 - Service Combination Valve (If Equipped)	**Every 600 Hours Of Use**
12 - Service Control Valve(s) (If Equipped)	**Every 600 Hours Of Use**

Descriptions of maintenance procedures referenced in this table are located on the next page.

Copyright © 2022-2030 Pirate Brand®, All Rights Reserved

Maintenance Procedures

Procedure Details

1. Inspect Personal Protective Equipment (PPE)

Inspect **ALL** Personal Protective Equipment (PPE) for proper fit, condition & operation as designed. Replace, repair, or be fitted as needed.

2. Inspect Remote Control Handles and Control Hose/Cord

Pneumatic Remote Control Systems:

Inspect Control Handle for damage making sure the Safety Flap/Lever Lock/Button is in good working order and replace or repair as needed. Inspect twinline hoses and replace if leaks, areas that show abrasion, or soft spots are found.

Electric Remote Control Systems:

Inspect Control Handle for damage making sure the Safety Flap/Lever Lock/Button is in good working order and replace or repair as needed. Inspect control cord and replace if damaged plug ends, areas that show abrasion, exposed wires, or cracks are found.

3. Inspect Blast Hose, Couplings & Gaskets

Inspect Blast Hose for leaks, abrasion & soft spots, and replace as needed. Inspect couplings for damage, leaks & wear, and replace as needed. Inspect coupling gaskets for leaks & wear, and replace as needed. Always use safety clips & whip checks (safety cables) at Blast Hose connections.

4. Inspect Blasting Nozzle

Inspect the Blasting Nozzle for wear and proper bore diameter. Replace the Blasting Nozzle when the bore diameter has worn to 1/16" wider than its original diameter. Example: replace a #5 nozzle (5/16" bore) when the bore reaches 3/8"

5. Inspect Air Hose, Couplings & Gaskets

Inspect Air Hose for leaks, abrasion & soft spots, and replace as needed. Inspect couplings for damage, leaks & wear, and replace as needed. Inspect coupling gaskets for leaks & wear, and replace as needed. Always use safety clips & whip checks (safety cables) at Air Hose connections.

6. Inspect & Clean Blow-Down Muffler

Remove the Blow-down muffler, turn it upside-down and tap on a hard surface to free trapped debris. If muffler is clogged and can't be cleaned out sufficiently, it must be replaced.

7. Inspect Blow-down Hose Assembly

Remove & inspect the Blow-down Hose assembly. If leaks or soft spots are found, it must be replaced.

8. Inspect Pop-Up & Pop-Up Gasket

Inspect the Pop-Up & Pop-Up Gasket for wear and replace as necessary.

9. Service Metering Valve

Disassemble, clean & inspect the Metering Valve for proper operation and worn components. Replace any worn components found. Lubricate APV & APVII valves with silicone paste before reassembling.

10. Service Automatic Air Valve

Disassemble, clean & inspect for proper operation and worn components. Replace any worn components found. Lubricate with silicone paste before reassembling.

11. Service Combination Valve

Disassemble, clean & inspect for proper operation and worn components. Replace any worn components found. Lubricate with silicone paste before reassembling.

12. Service Control Valve(s)

Disassemble, clean & inspect for proper operation and worn components. Replace any worn components found. Lubricate with silicone paste before reassembling.

Copyright © 2022-2030 Pirate Brand®, All Rights Reserved

Troubleshooting

Performance Related Issues

DANGER: Never attempt to open the Abrasive Blaster in any way while it is pressurized. Use extreme caution when performing troubleshooting procedures that involve pressurizing the Abrasive Blaster. Troubleshooting procedures are to be performed by experienced qualified personnel only.

NO ABRASIVE FLOW WHEN BLASTING (AIR ONLY)

Possible Causes:

1. The Abrasive Blaster is empty or has no Abrasive in it.

2. The Union-end Ball Valve above the Metering Valve is closed (if equipped).

3. Abrasive cut-off function is engaged halting the flow of abrasive (if equipped).

4. The Metering Valve is closed or has not been adjusted properly. If the Metering Valve is an APV or APVII and you are concerned the valve is not opening, the following test can be performed:

Close the Metering Valve fully by turning the knob clockwise until it stops, then turn the knob counter-clockwise about 9 full turns. Close the Union-end Ball Valve above the Metering Valve (if equipped). Close the Choke Valve, then depress the control handle and check to see if the knob is hard to turn or if it will not turn at all. If the knob is hard to turn or will not turn at all then the Metering Valve is opening properly. Lastly, release the control handle and open the Choke Valve and Union-end Ball Valve located above the Metering Valve if equipped.

5. There is an obstruction in the Metering Valve. To clear the obstruction for both APV series and MPV series Metering Valves, perform the following procedure:

Turn the knob on the Metering Valve clockwise until it stops and then turn the knob counter-clockwise 9 full turns to open it completely. Depress the control handle and have a second qualified person close the choke valve for 2 seconds, and then open it again immediately. This will push minor obstructions such as a small amount of wet abrasive, a piece of paper from a bag, or bridged paint chips through the Metering Valve and out the Nozzle. Readjust the Metering Valve back to the desired setting for blasting, and check to see if the obstruction has been cleared.

If there is still an obstruction and your Abrasive Blaster is equipped with a Union-end Ball Valve above the Metering Valve, close the Union-end Ball Valve and depressurize the Abrasive Blaster. Remove the Metering Valve by loosening the union on the Union-end Ball Valve. With the Metering Valve removed and the Abrasive Blaster depressurized, open the Union-end Ball Valve slowly to see if a steady stream of abrasive falls out. If you do not see a steady stream of abrasive there is a large obstruction such as a large piece of paper from a bag of abrasive. If your Abrasive Blaster is not equipped with a Union-end Ball Valve, then you must depressurize the Abrasive Blaster, remove the pusher line, and remove the Metering Valve to check for a steady stream of abrasive. If abrasive flows, wait until the Abrasive Blaster is empty before reinstalling the Metering Valve.

If you have determined there is a large obstruction, then the obstruction must be removed from inside the Pressure Vessel. To do this, make sure the Abrasive Blaster is depressurized and remove the Handway Assembly. Scoop or vacuum out all the abrasive from inside the pressure vessel and remove the obstruction. Reinstall the Handway Assembly and Metering Valve and tighten them securely, then Refill the Abrasive Blaster.

It is recommended that a screen be used to prevent foreign objects from entering the Abrasive Blaster and causing an obstruction.

6. The Abrasive Blaster has wet abrasive in it. The wet abrasive must be removed by depressurizing the Abrasive Blaster, removing the Handway Assembly, and scooping or vacuuming it out.

Dry abrasive must always be used. Clean, cool, dry air must be supplied to the Abrasive Blaster in order to prevent the abrasive from getting wet. For Abrasive Blasters being used outside, it is recommended that a lid be used to keep water from entering the Abrasive Blaster.

ABRASIVE STREAM IS TOO HEAVY OR THROBBING WHEN BLASTING

Possible Causes:

Note: SPR Systems may throb temporarily when starting up if abrasive has collected in blast hose from previous use. This is normal and requires no action to correct.

1. Choke Valve is partially closed. Never run the Abrasive Blaster with the Choke Valve in any other position except fully open or damage to the Abrasive Blaster will occur.

2. The Metering Valve needs to be adjusted.

LOW PRESSURE AT THE NOZZLE

Possible Causes:

1. Air compressor is the wrong size (too small) or the load button has not been pushed or turned on. (100 PSI Minimum)

2. Nozzle is worn out and the compressor cannot keep up with the increased demand.

3. Air supply hose to the blast machine is too small.

4. There is a hole in the blast hose.

5. Pop-up is not sealing properly.

6. Handway Assembly is leaking.

7. Dirty or clogged Auto Air Valve Vent (if equipped).

8. Diaphragm in Auto Air Valve is damaged, defective, or worn out (if equipped). To test, put your thumb over the vent. If any air is coming out with the control handle depressed, the diaphragm must be replaced.

9. Choke Valve is partially closed. Never run the Abrasive Blaster with the Choke Valve in any other position except fully open or damage to the Abrasive Blaster will occur.

10. Abrasive Metering Valve is open too far.

11. Obstruction in Nozzle.

12. Regulator needs adjustment (if equipped).

ABRASIVE BLASTER WILL NOT TURN ON OR IS SLOW TO TURN ON

Possible Causes:

1. Air compressor is the wrong size (too small) or the load button has not been pushed or turned on. (100 PSI Minimum)

2. Nozzle is worn out and the compressor cannot keep up with the increased demand.

3. Air supply hose to the blast machine is too small.

4. Control hoses and/or fittings are leaking.

5. 90 micron strainer clogged (if equipped)

6. Obstruction in Nozzle.

7. Dirty or clogged Auto Air Valve Vent (if equipped).

8. The Pneumatic Control Handle is damaged, defective or worn out (if equipped).

9. The Electric Control Handle is damaged, defective or worn out (if equipped).

10. The Electric Control Coil(s) are defective (if equipped).

11. Power Source (battery or AC-DC converter) is not providing sufficient power to open electric control valves (if equipped).

12. The Electric Control Cord is damaged, defective or worn out (if equipped).

13. Control Valve stuck or in need of service due to lack of lubrication, or is damaged, defective or worn out (if equipped).

14. Diaphragm in Auto Air Valve is damaged, defective, or worn out (if equipped). To test, put your thumb over the vent. If any air is coming out with the control handle depressed, the diaphragm must be replaced.

Copyright © 2022-2030 Pirate Brand®, All Rights Reserved

Troubleshooting

Operational Related Issues

DANGER: Never attempt to open the Abrasive Blaster in any way while it is pressurized. Use extreme caution when performing troubleshooting procedures that involve pressurizing the Abrasive Blaster. Troubleshooting procedures are to be performed by experienced qualified personnel only.

BLAST MACHINE TURNS ON ACCIDENTALLY OR WITHOUT WARNING

Possible Causes:

1. The safety flap, lever or lock button on the Control Handle is damaged or missing.

2. The lower rod seal in the Combination Valve is damaged, defective, or worn out (if equipped). To test to see if this is the problem, first turn on the air supply to the pot making sure the Blast Hose is being held tight to control it if it starts blasting. Without squeezing the Control Handle, have someone who is not holding the Blast Hose remove the small side (1/8") of the Twinline Control Hose from the Combination Valve. There should not be any air coming out of the Combination Valve where the Twinline was just removed. If there is air, then depressurize the Abrasive Blaster and check the Combination Valve lower rod seal and lower rod guide "O"-ring to make sure they are not damaged, defective or worn out. Also check to see if the Combination Valve lower rod guide has been installed backwards.

3. The Pneumatic Control Handle is damaged, defective or worn out (if equipped).

4. A bleeder type control handle has been installed.

WARNING: Never use bleeder type Remote Control Handles such as Clemco® or A-BEC® style handles with Pirate-Brand® SPH/SPR as they may cause the Abrasive Blaster to start without warning or to not stop the Abrasive Blaster when released.

5. The Electric Control Handle is damaged, defective or worn out (if equipped).

6. The Electric Control Cord is damaged, defective or worn out (if equipped).

7. "O"-ring on the shaft of the Auto Air Valve is damaged, defective or worn out (if equipped).

BLAST MACHINE IS SLOW TO TURN OFF OR WILL NOT TURN OFF WHEN CONTROL HANDLE IS RELEASED

Possible Causes:

1. A bleeder type control handle has been installed.

WARNING: Never use bleeder type Remote Control Handles such as Clemco® or A-BEC® style handles with Pirate-Brand® SPH/SPR as they may cause the Abrasive Blaster to start without warning or to not stop the Abrasive Blaster when released.

2. The Pneumatic Control Handle is damaged, defective or worn out (if equipped).

3. The Electric Control Handle is damaged, defective or worn out (if equipped).

4. The Electric Control Cord is damaged, defective or worn out (if equipped).

5. The Control Valve is stuck or in need of service due to lack of lubrication, or is damaged, defective or worn out (if equipped)

6. The lower rod seal in the Combination Valve is damaged, defective, worn out, or has been installed backwards (if equipped)

7. The lower rod guide in the Combination Valve has been installed backwards (if equipped).

8. The lower rod guide "O"-ring in the Combination Valve is damaged, defective or missing (if equipped).

To test to see if items 6, 7 or 8 are the problem, first turn on the air supply to the pot making sure the Blast Hose is being held tight to control it if it starts blasting. Without squeezing the Control Handle, have someone who is not holding the Blast Hose remove the small side (1/8") of the Twinline Control Hose from the Combination Valve. There should not be any air coming out of the Combination Valve where the Twinline was just removed. If there is air, then depressurize the Abrasive Blaster and check the Combination Valve lower rod seal and lower rod guide "O"-ring to make sure they are not damaged, defective or worn out. Also check to see if the Combination Valve lower rod guide has been installed backwards.

9. The Combination Valve Plug Assembly is not seating properly because it is damaged, defective or worn out (if equipped).

10. The Combination Valve Spring is damaged or defective (if equipped).

11. Blow-down Muffler is clogged slowing the release of air.

ABRASIVE BLASTER AIR BLAST STOPS BUT ABRASIVE KEEPS FLOWING WHEN CONTROL HANDLE IS RELEASED (SYSTEMS WITH APV SERIES METERING VALVES ONLY)

Possible Causes:

1. The Urethane Seat (black) in the Metering Valve is damaged, defective or worn out.

2. The Urethane Sleeve (black) in the Metering Valve is damaged, defective, or worn out.

3. The Plunger (tungsten carbide) in the Metering Valve is damaged, defective, or worn out.

4. Foreign material is stuck between the Plunger and the Seat in the Metering Valve.

5. The Metering Valve Spring is damaged, defective, or worn out.

BLAST MACHINE ABRASIVE STOPS BUT AIR BLAST WILL NOT SHUT OFF WHEN CONTROL HANDLE IS RELEASED

Possible Causes:

1. Auto Air Valve Seat is damaged, defective, or worn out.

2. Auto Air Valve Disc is damaged, defective, or worn out.

3. "O"-ring on the Auto Air Valve Shaft is damaged, defective or worn out.

4. Auto Air Valve Spring is damaged, defective, or worn out.

Copyright © 2022-2030 Pirate Brand®, All Rights Reserved

Warranty

PIRATE BRAND® ABRASIVE BLAST POT EQUIPMENT 5 YEAR / 10 YEAR LIMITED WARRANTY

5 YEAR LIMITED ABRASIVE BLAST POT WARRANTY. Manufacturer warrants the complete abrasive blast pot it manufactures to be free of defects in material and workmanship for a period of five (5) years from the date of invoice.

10 YEAR LIMITED PRESSURE VESSEL WARRANTY. Manufacturer warrants the abrasive blast pot pressure vessel it manufactures to be free of defects in material and workmanship for a period of ten (10) years from the date of invoice.

LIMITATION OF WARRANTIES AND REMEDIES. THIS WARRANTY IS EXTENDED ONLY TO THE BUYER WHO PURCHASES THE ABRASIVE BLAST POT DIRECTLY FROM THE MANUFACTURER OR ITS AUTHORIZED DISTRIBUTORS AND IS NON-TRANSFERABLE. THE PURCHASER'S EXCLUSIVE REMEDY ARISING FROM ITS PURCHASE OR USE OF THE PRODUCT SHALL BE STRICTLY LIMITED TO THE REPAIR OR REPLACEMENT OF THE PRODUCTS, AT THE DISCRETION OF THE MANUFACTURER, AND ALL WARRANTY CLAIMS OR REQUESTS MUST BE MADE IN WRITING TO THE MANUFACTURER WITHIN TEN (10) DAYS AFTER FAILURE OF THE PRODUCT. ALL OBLIGATIONS OR LIABILITIES OF MANUFACTURER OR SELLER FOR DAMAGES ARISING OUT OF OR IN CONNECTION WITH THE PRODUCT AND USE OR PERFORMANCE OF THE PRODUCTS, EXCEPT AS EXPRESSLY PROVIDED HEREIN, ARE FULLY DISCLAIMED AND EXCLUDED, AND NO SELLER OR DISTRIBUTOR HAS ANY AUTHORITY TO MAKE ANY WARRANTY OR ASSUME ANY LIABILITY ON BEHALF OF THE MANUFACTURER IN CONNECTION WITH THE SALE OF THE PRODUCT EXCEPT AS STATED HEREIN.

AS A CONDITION OF THE PURCHASE, PURCHASER AGREES THAT MANUFACTURER AND SELLER SHALL NOT, UNDER ANY CIRCUMSTANCES, BE LIABLE FOR ANY COST OF FREIGHT, SHIPPING OR TRANSPORTATION, LABOR, SPECIAL CHARGES, NORMAL MAINTENANCE SERVICES, LOST OPERATING TIME, LOSS OF USE, LOST PROFITS, LOSS OF GOODWILL, CONSEQUENTIAL DAMAGES, PUNITIVE OR EXEMPLARY DAMAGES, OR OTHER DAMAGES OR LOSS. OTHER THAN AS DESCRIBED HEREIN, MANUFACTURER AND SELLER MAKE NO WARRANTY OF ANY KIND, EXPRESS OR IMPLIED, WITH RESPECT TO THE PRODUCTS, AND SPECIFICALLY DISCLAIM ANY WARRANTY OF MERCHANTABILITY, FITNESS FOR A PARTICULAR PURPOSE, OR OTHER WARRANTY. PURCHASER ASSUMES ALL RISK AND LIABILITY RESULTING FROM THE USE OF THE PRODUCTS. PURCHASER FURTHER AGREES AS A CONDITION OF THE SALE AND THE USE OF THE PRODUCT, THAT ANY DAMAGES OR RISK OF LOSS OTHER THAN AS DESCRIBED HEREIN ABOVE, SHALL BE THE EXCLUSIVE RESPONSIBILITY OF THE PURCHASER AND NOT THE MANUFACTURER OR SELLER. MANUFACTURER AND SELLER SHALL NOT BE LIABLE FOR ANY DAMAGES INCURRED BY ANY PERSON AS A RESULT OF MISUSE, IMPROPER INSTALLATION, IMPROPER APPLICATION, IMPROPER OPERATION OF THE PRODUCTS, NORMAL WEAR AND TEAR, ALTERATIONS OR MODIFICATIONS MADE TO THE PRODUCTS, OR ACCIDENT. THE USE OF REPLACEMENT PARTS NOT PROVIDED OR AUTHORIZED BY THE MANUFACTURER VOIDS ALL WARRANTIES.

A COMPLETELY FILLED OUT WARRANTY CARD MUST BE RETURNED TO THE MANUFACTURER WITHIN THIRTY (30) DAYS OF PURCHASE OF THE PRODUCT OR ALL WARRANTIES ARE VOID. PRODUCT MUST BE MAINTAINED IN ACCORDANCE TO THE MAINTENANCE SCHEDULE PROVIDED IN THE PRODUCT MANUAL, FAILURE TO MAINTAIN THE PRODUCT IN ACCORDANCE WITH THE MAINTENANCE SCHEDULE VOIDS ALL WARRANTIES. THIS WARRANTY DOES NOT COVER FACTORY INSTALLED OR CUSTOMER INSTALLED ACCESSORIES.

WARRANTY CLAIMS. Warranty claims must be submitted to the manufacturer within ten (10) days after failure of the product. Contact information for warranty claims:

Forecast Sales, Inc.
2719 Tobey Dr.
Indianapolis, IN 46219
317-829-0147

Effective July 8, 2015

Copyright © 2022-2030 Pirate Brand®, All Rights Reserved

Pressure Vessel Parts Lists

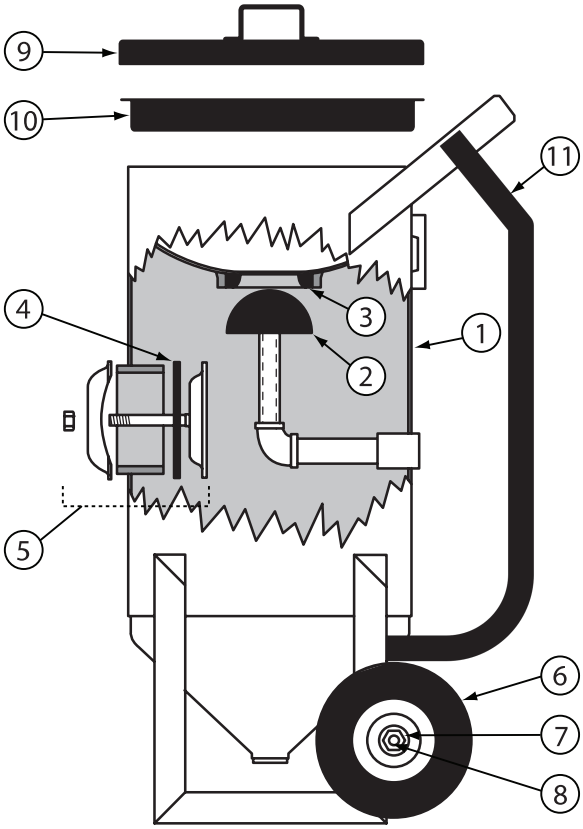

3.5 Cu. Ft. Portable Vessels

1	888-1011-00303PB	VESSEL, PORTABLE, 3.5 CU. FT. (100 LITERS), 150 PSI (10.3 BAR), 90° CONE BOTTOM, 9" CLEARANCE, 18" DIA, INCLUDES HANDWAY ASSEMBLY, WHEELS, POP-UP & POP-UP GASKET
2	888-2100-010PB	POP-UP W/STEM URETHANE, LARGE
3	888-2100-011PB	POP-UP GASKET URETHANE, LARGE
4	888-7000-00106PB	GASKET, HANDWAY, 6" x 8"
5	888-7000-00111PB	HANDWAY CRAB ASSY 6" x 8"
6	888-7046-003PB	WHEEL & TIRE, 1 BAG, 3 BAG, 800 MT & 1600 MT
7	888-7019-519PB	NUT, NYLOCK, 3/4" UNC
8	888-7040-003PB	AXLE, 3/4" x 22", 1 BAG, 3 BAG & 1600 MT
9	888-5010-030PB	LID, 18" DIA, W/HANDLE, POWDER COATED
10	888-5011-030PB	SCREEN, LOW PROFILE, 18" (1/4" MESH), POWDER COATED BLACK
	888-5011-031PB	SCREEN, FINE MESH, LOW PROFILE, 18" (3/32" MESH), POWDER COATED BLACK
11	888-7002-003PB	LOADING SKID / VALVE GUARD 3 BAG, POWDER COATED BLACK

6.5 Cu. Ft. Portable Vessels

1	888-1011-00603PB	VESSEL, PORTABLE, 6.5 CU. FT. (185 LITERS), 150 PSI (10.3 BAR), 90° CONE BOTTOM, 9" CLEARANCE, 24" DIA, INCLUDES HANDWAY ASSEMBLY, WHEELS, POP-UP & POP-UP GASKET
2	888-2100-010PB	POP-UP W/STEM URETHANE, LARGE
3	888-2100-011PB	POP-UP GASKET URETHANE, LARGE
4	888-7000-00106PB	GASKET, HANDWAY, 6" x 8"
5	888-7000-00111PB	HANDWAY CRAB ASSY 6" x 8"
6	120-4270	WHEEL AND TIRE, 16" x 4" BLACK
7	888-7019-527PB	NUT, NYLOCK, 1" UNC
8	888-7040-006PB	AXLE 1" x 33", 6 - 10 BAG POT
9	888-5010-060PB	LID, 24" DIA, W/HANDLE, POWDER COATED
10	888-5011-060PB	SCREEN, LOW PROFILE, 24" (1/4" MESH), POWDER COATED BLACK
	888-5011-062PB	SCREEN, FINE MESH, LOW PROFILE, 24" (3/32" MESH), POWDER COATED BLACK
11	888-7002-006PB	LOADING SKID / VALVE GUARD 6 BAG, POWDER COATED BLACK

6.5 Cu. Ft. Stationary Vessels

1	888-0430-00000PB	VESSEL, STATIONARY, 6.5 CU FT (185 LITERS), 150 PSI (10.3 BAR), 90°CONE BOTTOM, 13"CLEARANCE, 54"OAH INCLUDES: 9"UMBRELLA, HANDWAY ASSEMBLY, POP-UP & SKIRTED POP-UP GASKET
2	888-2100-010PB	POP-UP W/STEM URETHANE, LARGE
3	888-2100-011PB	POP-UP GASKET URETHANE, LARGE
4	888-7000-00106PB	GASKET, HANDWAY, 6" x 8"
5	888-7000-00111PB	HANDWAY CRAB ASSY 6" x 8"
9	888-5010-060PB	LID, 24" DIA, W/HANDLE, POWDER COATED BLACK

Copyright © 2022-2030 Pirate Brand®, All Rights Reserved

Pipe String Parts Lists

SPR SERIES - Pneumatic Controls

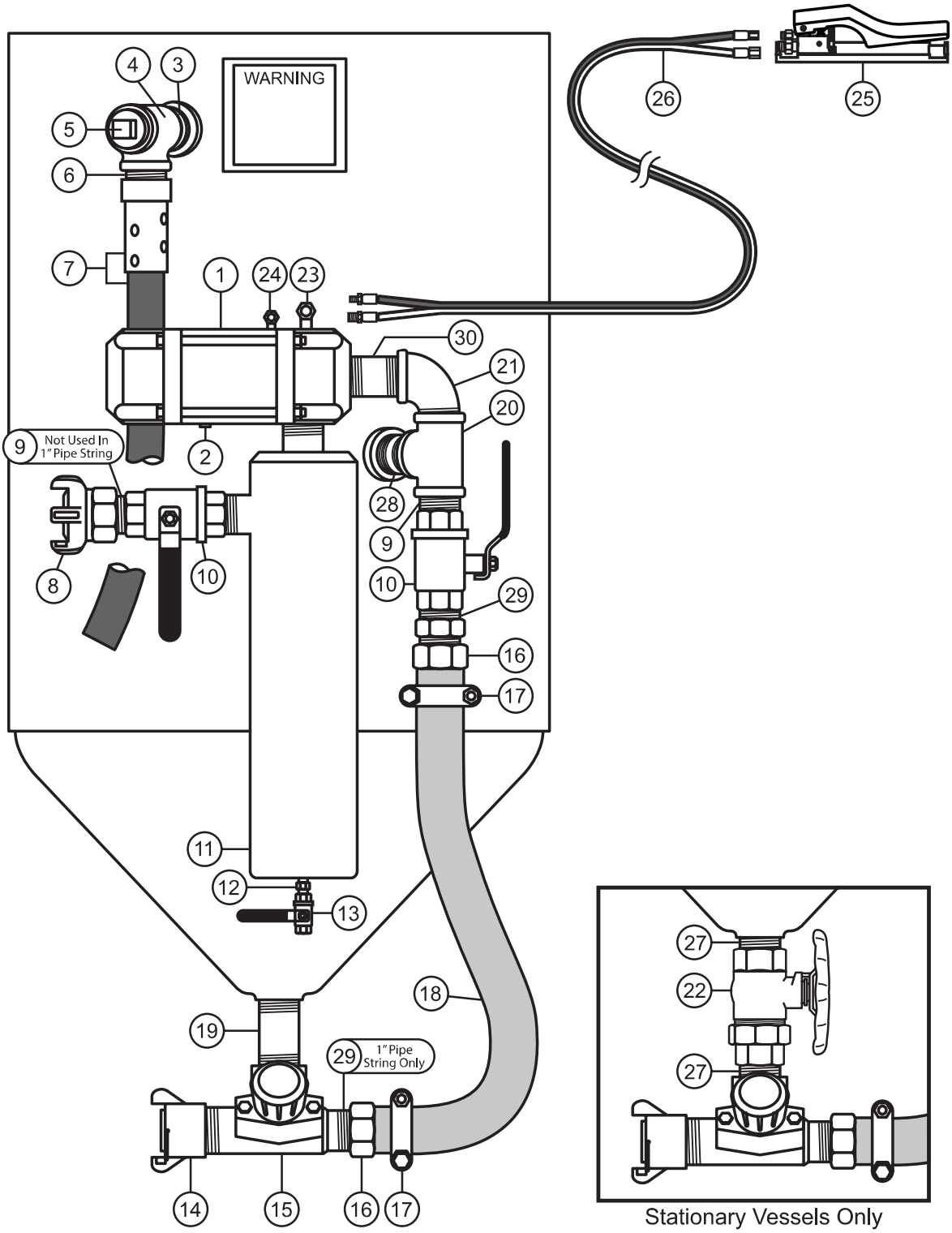

Copyright © 2022-2030 Pirate Brand®, All Rights Reserved

Pipe String Parts Lists

3.5/6.5 Cu Ft SPR Abrasive Blasters - Pneumatic Controls - Parts List

	1" PIPE STRING		1-1/4" PIPE STRING		1-1/2" BIG-GUN™ PIPE STRING	
1*	888-2223-000PB	VALVE, COMBINATION, 1-1/4"			888-2225-001PB	VALVE, COMBINATION II, 1-1/2", **BIG-GUN™**
	888-2225-000PB	VALVE, COMBINATION II, 1-1/4"				
2	888-2014-300PB	VENT, 1/8"				
3	888-3029-10711PB	NIPPLE, TBE, GALV, 1-1/4" x 3"			888-3029-10714PB	NIPPLE, TBE, GALV, 1-1/4" x 4"
4	888-3011-107PB	TEE, GALV, 1-1/4"				
5	888-3014-107PB	PIPE PLUG, GALV, 1-1/4"				
6	888-3029-10799PB	NIPPLE, TBE, GALV, 1-1/4" x CLOSED				
7	888-4115-005PB	BLOWDOWN HOSE ASSY, 3/4" x 18", SURVIVOR™, 4 PLY, WP 150 PSI **(FOR ALL PORTABLE BLASTERS)**				
	888-4115-00503PB	BLOWDOWN HOSE ASSY, 3/4" x 3', SURVIVOR™, 4 PLY, WP 150 PSI				
	888-4115-00510PB	BLOWDOWN HOSE ASSY, 3/4" x 10', SURVIVOR™, 4 PLY, WP 150 PSI				
	888-4115-00515PB	BLOWDOWN HOSE ASSY, 3/4" x 15', SURVIVOR™, 4 PLY, WP 150 PSI				
8	UM-100	AIR HOSE COUPLING, 2 LUG, 1" MALE NPT	UF-125	AIR HOSE COUPLINGS, 4 LUG, 1-1/4" FEMALE NPT	UF-150	AIR HOSE COUPLINGS, 4 LUG, 1-1/2" FEMALE NPT
9	888-3029-10699PB	NIPPLE, TBE, GALV, 1" x CLOSED	888-3029-10799PB	NIPPLE, TBE, GALV, 1-1/4" x CLOSED	888-3029-10899PB	NIPPLE, TBE, GALV, 1-1/2" x CLOSED
10	VB100	BALL VALVE, FULL PORT, 1" NPT	VB125	BALL VALVE, FULL PORT, 1-1/4" NPT	VB150	BALL VALVE, FULL PORT, 1-1/2" NPT
11	888-1200-006PB	MOISTURE TRAP 1"	888-1200-007PB	MOISTURE TRAP 1-1/4"	888-1200-010PB	MOISTURE TRAP 1-1/2", **BIG-GUN™**
12	888-3031-31202PB	NIPPLE, HEX 1/4" MNPT x 1/4" MNPT				
13	VB025	BALL VALVE, FULL PORT, 1/4" NPT				
14	SB-2-IR	THD QUICK COUPLING, IRON, 1-1/2"			SB-3X-AL	THD QUICK COUPLING, ALUMINUM, 1-1/2", FULL PORT
15*	888-2125-106PB	MPV, 1", W/URETHANE SLEEVE	888-2125-107PB	MPV, 1-1/4", W/URETHANE SLEEVE	888-2125-108PB	MPV, 1-1/2", W/URETHANE SLEEVE
	888-2126-106PB	MPV II, 1" W/ URETHANE SLEEVE	888-2126-107PB	MPV II, 1-1/4" W/ URETHANE SLEEVE	888-2126-108PB	MPV II, 1-1/2" W/ URETHANE SLEEVE
16	888-4205-106PB	HOSE, INSERT SWIVEL, 1", INCLUDES GASKET	888-4205-107PB	HOSE, INSERT SWIVEL, 1-1/4", INCLUDES GASKET	888-4205-108PB	HOSE, INSERT SWIVEL, 1-1/2", INCLUDES GASKET
	888-4205-10699PB	HOSE, SWIVEL GASKET, 1"	888-4205-10799PB	HOSE, SWIVEL GASKET, 1-1/4"	888-4205-10899PB	HOSE, SWIVEL GASKET, 1-1/2"
17	888-4235-006PB	HOSE, CLAMP, DOUBLE BOLT, 1"	888-4235-007PB	HOSE, CLAMP, DOUBLE BOLT, 1-1/4"	888-4235-008PB	HOSE, CLAMP, DOUBLE BOLT, 1-1/2"
18	112-0100	HOSE, AIR, RED, NOMINAL 1" ID x 1-1/2" OD, WP 300 PSI	112-0114	HOSE, AIR, RED, NOMINAL 1-1/4" ID x 1-51/64" OD, WP 250 PSI	112-0112	HOSE, AIR, RED, NOMINAL 1-1/2" ID x 2-3/32" OD, WP 250 PSI
19	888-3028-10714PB	NIPPLE, TBE, SCHEDULE 80, GALV, 1-1/4" x 4"				
20	888-3013-10706PB	TEE, GALV, 1-1/4" x 1" x 1-1/4"	888-3011-107PB	TEE, GALV, 1-1/4"	888-3038-10807PB	TEE REDUCING, GALV, 1-1/2" x 1-1/2" x 1-1/4"
21	888-3006-107PB	ELBOW, STREET, 90°, GALV, 1-1/4"			888-3006-108PB	ELBOW, STREET, 90°, GALV, 1-1/2"
22	**STATIONARY VESSELS ONLY**				888-2408-907PB	BALL VALVE, UNION END, 1-1/4"
23	888-4203-50202PB	SWIVEL 90°, 1/4"MNPT x 1/4"F				
24	888-4203-50000PB	SWIVEL 90°, 1/8"MNPT X 1/8"F				
25**	888-2263-000PB	HANDLE, CONTROL, PNEUMATIC (DEADMAN CONTROL HANDLE)				
	888-2263-001PB	HANDLE, CONTROL, PNEUMATIC #2 (DEADMAN CONTROL HANDLE) **(STANDARD INCLUDED HANDLE)**				
	888-2263-002PB	HANDLE, CONTROL, PNEUMATIC #3 (DEADMAN CONTROL HANDLE)				
26	200-055	HOSE, TWINLINE CONTROL, ASSEMBLY, YEL/YEL W/BLACK STRIPE, NOMINAL 3/16" ID x 55'				
	200-110	HOSE, TWINLINE CONTROL, ASSEMBLY, YEL/YEL W/BLACK STRIPE, NOMINAL 3/16" ID x 110'				
27	888-3028-10799PB	NIPPLE, TBE, SCHEDULE 80, GALV, 1-1/4" x CLOSED				
28	888-3028-10711PB	NIPPLE, TBE, SCHEDULE 80, GALV, 1-1/4" x 3"			888-3028-10714PB	NIPPLE, TBE, SCHEDULE 80, GALV, 1-1/4" x 4"
29	888-3031-30606PB	HEX NIPPLE, 1" x 1"	888-3031-30707PB	HEX NIPPLE, 1-1/4" x 1-1/4"	888-3031-30808PB	HEX NIPPLE, 1-1/2" x 1-1/2"
30	888-3029-10711PB	NIPPLE, TBE, GALV, 1-1/4" x 3"			888-3029-10814PB	NIPPLE, TBE, GALV, 1-1/2" x 4"

* See "***Valve Parts Lists***" Section for detailed parts list.

** See "***Control Handle Parts Lists***" Section for detailed parts list.

Copyright © 2022-2030 Pirate Brand®, All Rights Reserved

Pipe String Parts Lists

SPR SERIES - Electric Controls

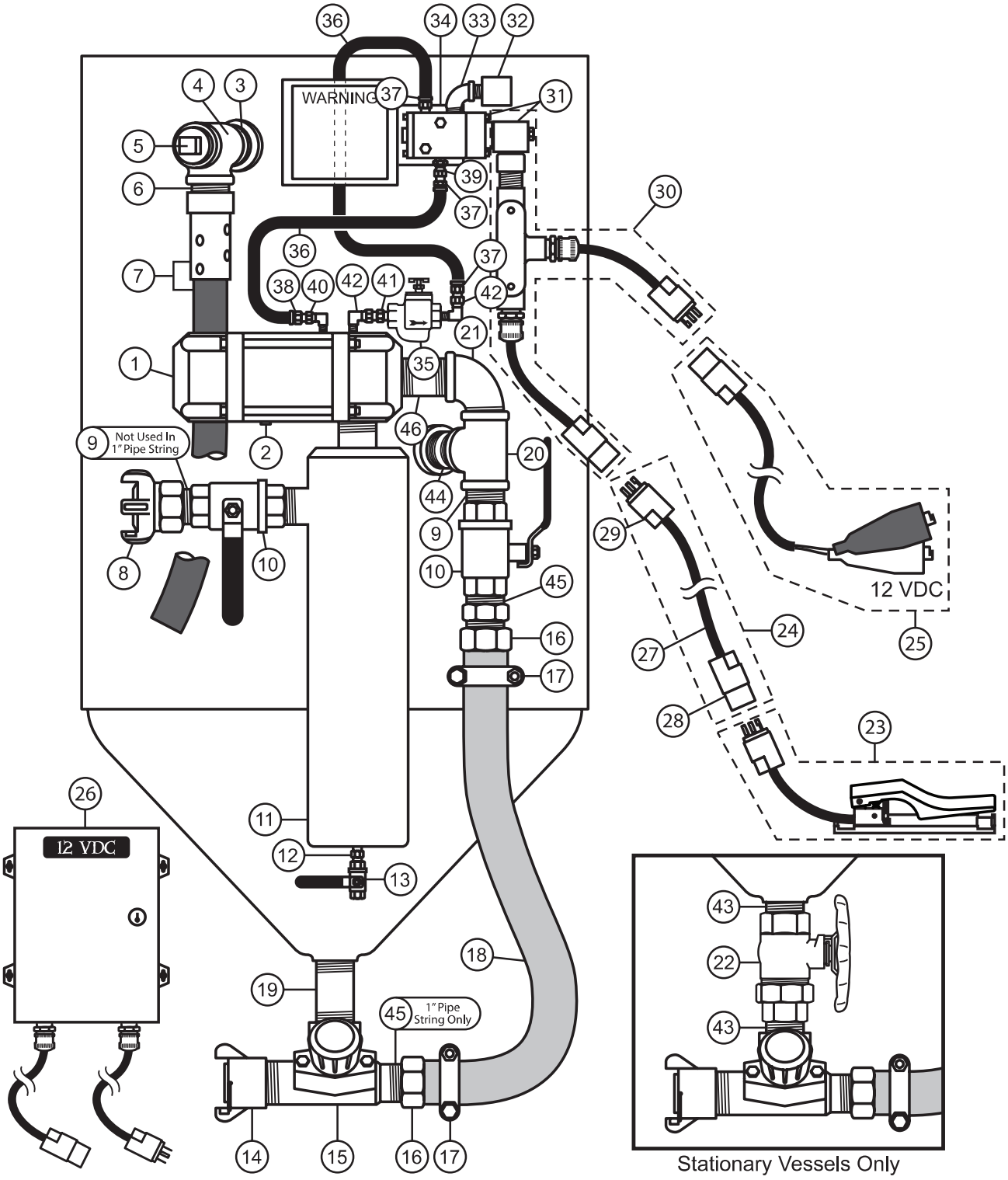

Copyright © 2022-2030 Pirate Brand®, All Rights Reserved

Pipe String Parts Lists

3.5/6.5 Cu Ft SPR Abrasive Blasters - Electric Controls - Parts List

	1" PIPE STRING		1-1/4" PIPE STRING		1-1/2" BIG-GUN™ PIPE STRING	
1*	888-2223-000PB	VALVE, COMBINATION, 1-1/4"			888-2225-001PB	VALVE, COMBINATION II, 1-1/2", **BIG-GUN™**
	888-2225-000PB	VALVE, COMBINATION II, 1-1/4"				
2	888-2014-300PB	VENT, 1/8"				
3	888-3029-10711PB	NIPPLE, TBE, GALV, 1-1/4" x 3"			888-3029-10714PB	NIPPLE, TBE, GALV, 1-1/4" x 4"
4	888-3011-107PB	TEE, GALV, 1-1/4"				
5	888-3014-107PB	PIPE PLUG, GALV, 1-1/4"				
6	888-3029-10799PB	NIPPLE, TBE, GALV, 1-1/4" x CLOSED				
7	888-4115-005PB	BLOWDOWN HOSE ASSY, 3/4" x 18", SURVIVOR™, 4 PLY, WP 150 PSI **(FOR ALL PORTABLE BLASTERS)**				
	888-4115-00503PB	BLOWDOWN HOSE ASSY, 3/4" x 3', SURVIVOR™, 4 PLY, WP 150 PSI				
	888-4115-00510PB	BLOWDOWN HOSE ASSY, 3/4" x 10', SURVIVOR™, 4 PLY, WP 150 PSI				
	888-4115-00515PB	BLOWDOWN HOSE ASSY, 3/4" x 15', SURVIVOR™, 4 PLY, WP 150 PSI				
8	UM-100	AIR HOSE COUPLING, 2 LUG, 1" MALE NPT	UF-125	AIR HOSE COUPLINGS, 4 LUG, 1-1/4" FEMALE NPT	UF-150	AIR HOSE COUPLINGS, 4 LUG, 1-1/2" FEMALE NPT
9	888-3029-10699PB	NIPPLE, TBE, GALV, 1" x CLOSED	888-3029-10799PB	NIPPLE, TBE, GALV, 1-1/4" x CLOSED	888-3029-10899PB	NIPPLE, TBE, GALV, 1-1/2" x CLOSED
10	VB100	BALL VALVE, FULL PORT, 1" NPT	VB125	BALL VALVE, FULL PORT, 1-1/4" NPT	VB150	BALL VALVE, FULL PORT, 1-1/2" NPT
11	888-1200-006PB	MOISTURE TRAP 1"	888-1200-007PB	MOISTURE TRAP 1-1/4"	888-1200-010PB	MOISTURE TRAP 1-1/2", **BIG-GUN™**
12	888-3031-31202PB	NIPPLE, HEX 1/4" MNPT x 1/4" MNPT				
13	VB025	BALL VALVE, FULL PORT, 1/4" NPT				
14	SB-2-IR	THD QUICK COUPLING, IRON, 1-1/2"			SB-3X-AL	THD QUICK COUPLING, ALUMINUM, 1-1/2", FULL PORT
15*	888-2125-106PB	MPV, 1", W/URETHANE SLEEVE	888-2125-107PB	MPV, 1-1/4", W/URETHANE SLEEVE	888-2125-108PB	MPV, 1-1/2", W/URETHANE SLEEVE
	888-2126-106PB	MPV II, 1" W/ URETHANE SLEEVE	888-2126-107PB	MPV II, 1-1/4" W/ URETHANE SLEEVE	888-2126-108PB	MPV II, 1-1/2" W/ URETHANE SLEEVE
16	888-4205-106PB	HOSE, INSERT SWIVEL, 1", INCLUDES GASKET	888-4205-107PB	HOSE, INSERT SWIVEL, 1-1/4", INCLUDES GASKET	888-4205-108PB	HOSE, INSERT SWIVEL, 1-1/2", INCLUDES GASKET
	888-4205-10699PB	HOSE, SWIVEL GASKET, 1"	888-4205-10799PB	HOSE, SWIVEL GASKET, 1-1/4"	888-4205-10899PB	HOSE, SWIVEL GASKET, 1-1/2"
17	888-4235-006PB	HOSE, CLAMP, DOUBLE BOLT, 1"	888-4235-007PB	HOSE, CLAMP, DOUBLE BOLT, 1-1/4"	888-4235-008PB	HOSE, CLAMP, DOUBLE BOLT, 1-1/2"
18	112-0100	HOSE, AIR, RED, NOMINAL 1" ID x 1-1/2" OD, WP 300 PSI	112-0114	HOSE, AIR, RED, NOMINAL 1-1/4" ID x 1-51/64" OD, WP 250 PSI	112-0112	HOSE, AIR, RED, NOMINAL 1-1/2" ID x 2-3/32" OD, WP 250 PSI
19	888-3028-10714PB	NIPPLE, TBE, SCHEDULE 80, GALV, 1-1/4" x 4"				
20	888-3013-10706PB	TEE, GALV, 1-1/4" x 1" x 1-1/4"	888-3011-107PB	TEE, GALV, 1-1/4"	888-3038-10807PB	TEE REDUCING, GALV, 1-1/2" x 1-1/2" x 1-1/4"
21	888-3006-107PB	ELBOW, STREET, 90°, GALV, 1-1/4"			888-3006-108PB	ELBOW, STREET, 90°, GALV, 1-1/2"
22	**STATIONARY VESSELS ONLY**				888-2408-907PB	BALL VALVE, UNION END, 1-1/4"
23**	888-2263-40001PB	HANDLE, CONTROL, ELECTRIC w/TWIST-LOCK PLUG **(NOT FOR USE WITH STEEL ABRASIVES)**				
	888-2263-40101PB	HANDLE, CONTROL, ELECTRIC #2 w/TWIST-LOCK PLUG **(NOT FOR USE WITH STEEL ABRASIVES) (STANDARD INCLUDED NON-SEALED CONNECTOR HANDLE)**				
	888-2263-40102PB	HANDLE, CONTROL, ELECTRIC #2 w/3 PART SEALED STRAIN RELIEF **(APPROPRIATE FOR USE WITH STEEL ABRASIVES)**				
	888-2263-40104PB	HANDLE, CONTROL, ELECTRIC #2 w/**SEALED WATERPROOF CONNECTOR (APPROPRIATE FOR USE WITH STEEL ABRASIVES)**				
24	888-7073-055PB	EXTN CORD W/TWIST-LOCK CONNECTORS, 55', 3 PRONG, 2 WIRE, X-TREME DUTY™ URETHANE CONTROL CORD				
	888-7073-110PB	EXTN CORD W/TWIST-LOCK CONNECTORS, 110', 3 PRONG, 2 WIRE, X-TREME DUTY™ URETHANE CONTROL CORD				
	888-7074-05501PB	EXTN CORD W/SEALED WATERPROOF CONNECTORS, 55', 3 PRONG, 3 WIRE, X-TREME DUTY™ URETHANE CONTROL CORD				
	888-7074-11001PB	EXTN CORD W/SEALED WATERPROOF CONNECTORS, 110', 3 PRONG, 3 WIRE, X-TREME DUTY™ URETHANE CONTROL CORD				
25	888-7072-012PB	POWER CORD, 25' 12VDC, 3-LUG, X-TREME DUTY™ URETHANE CORD				
	888-7072-01201PB	POWER CORD W/SEALED WATERPROOF CONNECTOR, 25' 12VDC, 3 PRONG, X-TREME DUTY™ URETHANE CORD				
26	PB-SMP3WP	POWER SUPPLY 120AC INPUT/12VDC @ 2.5 AMP OUTPUT, 4 CONTROL VALVE MAX LOAD, 3 PRONG CONNECTOR, X-TREME DUTY™ URETHANE CORD				
27	888-7106-183PB	CONTROL CORD, X-TREME DUTY™, URETHANE JACKET, 18AWG, 3 WIRE				
28	888-7109-300PB	ELECTRIC CONNECTOR, FEMALE, TWIST-LOCK, 3 PRONG				
	888-7109-30002PB	ELECTRIC CONNECTOR, SEALED WATERPROOF, FEMALE, 3 PRONG (APPROPRIATE FOR USE WITH STEEL ABRASIVES)				
29	888-7109-301PB	ELECTRIC CONNECTOR, MALE, TWIST-LOCK, 3 PRONG				
	888-7109-30102PB	ELECTRIC CONNECTOR, SEALED WATERPROOF, MALE, 3 PRONG (APPROPRIATE FOR USE WITH STEEL ABRASIVES)				
30	888-7112-000PB	JUNCTION TEE ASSEMBLY, SMALL & BULK BLASTERS, 12VDC W/ TWIST-LOCK CONNECTORS, (1) OUTLET				
	888-7112-000PB-01	JUNCTION TEE ASSEMBLY, SMALL & BULK BLASTERS, 12VDC W/ SEALED WATERPROOF CONNECTORS, (1) OUTLET				
31	888-2229-100PB	VALVE, CONTROL, ELECTRIC, 12VDC (NORMALLY CLOSED)				
	888-2229-10099PB	VALVE, CONTROL, REPAIR KIT, ELECTRIC, HEAVY DUTY				
32	888-2013-402PB	DUST ELIMINATOR, 1/4" MNPT				
33	888-3006-102PB	ELBOW, STREET, 90°, GALV, 1/4"				
34	888-7033-002PB	BRACKET, CONTROL VALVE				
35	888-2301-90290PB	STRAINER, BRZ 1/4" 90 MICRON				
36	888-4101-002PB	HOSE, AIR, INSTA-GRIP, BLACK, NOMINAL 1/4" ID, 300 PSI				
37	888-4200-30202PB	HOSE, PUSH-ON INSERT 1/4" x 1/4" NPT				
38	888-4200-30200PB	HOSE, PUSH-ON INSERT 1/4" x 1/8" NPT				
39	888-4201-50202PB	STRAIGHT SWIVEL, 1/4"MNPT x 1/4"F				
40	888-4203-50000PB	SWIVEL 90°, 1/8"MNPT X 1/8"F				
41	888-3031-30202PB	HEX NIPPLE 1/4" NPT x 1/4" W/BALL ST				
42	888-4203-50202PB	SWIVEL 90°, 1/4"MNPT x 1/4"F				
43	888-3028-10799PB	NIPPLE, TBE, SCHEDULE 80, GALV, 1-1/4" x CLOSED				
44	888-3028-10711PB	NIPPLE, TBE, SCHEDULE 80, GALV, 1-1/4" x 3" NIPPLE, TBE			888-3028-10714PB	NIPPLE, TBE, SCHEDULE 80, GALV, 1-1/4" x 4"
45	888-3031-30606PB	HEX NIPPLE, 1" x 1"	888-3031-30707PB	HEX NIPPLE, 1-1/4" x 1-1/4"	888-3031-30808PB	HEX NIPPLE, 1-1/2" x 1-1/2"
46	888-3029-10711PB	NIPPLE, TBE, GALV, 1-1/4" x 3"			888-3029-10814PB	NIPPLE, TBE, GALV, 1-1/4" x 4"

* See "***Valve Parts Lists***" Section for detailed parts list.
** See "***Control Handle Parts Lists***" Section for detailed parts list.

Copyright © 2022-2030 Pirate Brand®, All Rights Reserved

Pipe String Parts Lists

SPR SERIES - Pneumatic Abrasive Cut-Off

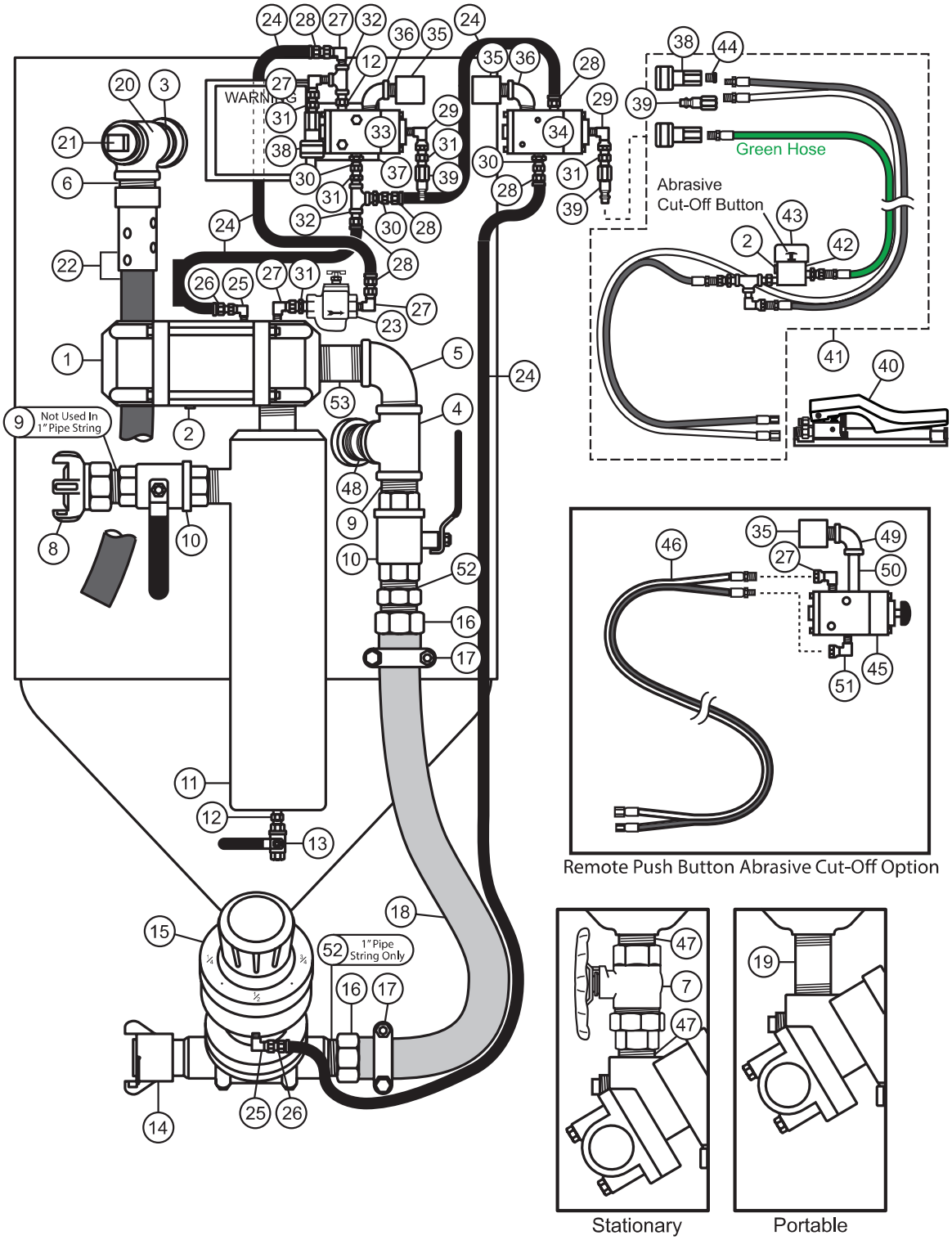

Copyright © 2022-2030 Pirate Brand®, All Rights Reserved

Pipe String Parts Lists

3.5/6.5 Cu Ft SPR Abrasive Blasters - Pneumatic Abrasive Cut-Off - Parts List

	1" PIPE STRING		1-1/4" PIPE STRING		1-1/2" BIG-GUN™ PIPE STRING	
1*	888-2223-000PB	VALVE, COMBINATION, 1-1/4"			888-2225-001PB	VALVE, COMBINATION II, 1-1/2", **BIG-GUN™**
	888-2225-000PB	VALVE, COMBINATION II, 1-1/4"				
2	888-2014-300PB	VENT, 1/8"				
3	888-3029-10711PB	NIPPLE, TBE, GALV, 1-1/4" x 3"			888-3029-10714PB	NIPPLE, TBE, GALV, 1-1/4" x 4"
4	888-3013-10706PB	TEE, GALV, 1-1/4" x 1" x 1-1/4"	888-3011-107PB	TEE, GALV, 1-1/4"	888-3038-10807PB	TEE REDUCING, GALV, 1-1/2" x 1-1/2" x 1-1/4"
5	888-3006-107PB	ELBOW, STREET, 90°, GALV, 1-1/4"			888-3006-108PB	ELBOW, STREET, 90°, GALV, 1-1/2"
6	888-3029-10799PB	NIPPLE, TBE, GALV, 1-1/4" x CLOSED				
7	888-2408-907PB	BALL VALVE, UNION END, 1-1/4", BIG-BORE™, W/ HALF HANDLE				
8	UM-100	AIR HOSE COUPLING, 2 LUG, 1" MALE NPT	UF-125	AIR HOSE COUPLINGS, 4 LUG, 1-1/4" FEMALE NPT	UF-150	AIR HOSE COUPLINGS, 4 LUG, 1-1/2" FEMALE NPT
9	888-3029-10699PB	NIPPLE, TBE, GALV, 1" x CLOSED	888-3029-10799PB	NIPPLE, TBE, GALV, 1-1/4" x CLOSED	888-3029-10899PB	NIPPLE, TBE, GALV, 1-1/2" x CLOSED
10	VB100	BALL VALVE, FULL PORT, 1" NPT	VB125	BALL VALVE, FULL PORT, 1-1/4" NPT	VB150	BALL VALVE, FULL PORT, 1-1/2" NPT
11	888-1200-006PB	MOISTURE TRAP 1"	888-1200-007PB	MOISTURE TRAP 1-1/4"	888-1200-010PB	MOISTURE TRAP 1-1/2", **BIG-GUN™**
12	888-3031-31202PB	NIPPLE, HEX 1/4" MNPT x 1/4" MNPT				
13	VB025	BALL VALVE, FULL PORT, 1/4" NPT				
14	SB-2-IR	THD QUICK COUPLING, IRON, 1-1/2"	SB-1S-IR	THD CPLG, STD NPS, IRON, 1-1/4"	SB-3X-AL	THD QUICK COUPLING, ALUMINUM, 1-1/2", FULL PORT
15*	888-2149-106PB	APV, 1", W/ URETHANE SLEEVE	888-2149-107PB	APV, 1-1/4", W/ URETHANE SLEEVE	888-2149-108PB	APV, 1-1/2", W/ URETHANE SLEEVE
	888-2149-006PB	APV, 1", W/ TUNGSTEN CARBIDE SLEEVE	888-2149-007PB	APV, 1-1/4", W/ TUNGSTEN CARBIDE SLEEVE	888-2149-008PB	APV, 1-1/2", W/ TUNGSTEN CARBIDE SLEEVE
	888-2148-006PB	APV II, 1" W/ SOLID TUNGSTEN CARBIDE SLEEVE	888-2148-007PB	APV II, 1-1/4" W/ SOLID TUNGSTEN CARBIDE SLEEVE	888-2148-008PB	APV II, 1-1/2" W/ SOLID TUNGSTEN CARBIDE SLEEVE
16	888-4205-106PB	HOSE, INSERT SWIVEL, 1", INCLUDES GASKET	888-4205-107PB	HOSE, INSERT SWIVEL, 1-1/4", INCLUDES GASKET	888-4205-108PB	HOSE, INSERT SWIVEL, 1-1/2", INCLUDES GASKET
	888-4205-10699PB	HOSE, SWIVEL GASKET, 1"	888-4205-10799PB	HOSE, SWIVEL GASKET, 1-1/4"	888-4205-10899PB	HOSE, SWIVEL GASKET, 1-1/2"
17	888-4235-006PB	HOSE, CLAMP, DOUBLE BOLT, 1"	888-4235-007PB	HOSE, CLAMP, DOUBLE BOLT, 1-1/4"	888-4235-008PB	HOSE, CLAMP, DOUBLE BOLT, 1-1/2"
18	112-0100	HOSE, AIR, RED, NOMINAL 1" ID x 1-1/2" OD, WP 300 PSI	112-0114	HOSE, AIR, RED, NOMINAL 1-1/4" ID x 1-51/64" OD, WP 250 PSI	112-0112	HOSE, AIR, RED, NOMINAL 1-1/2" ID x 2-3/32" OD, WP 250 PSI
19	888-3028-10711PB	NIPPLE, TBE, SCHEDULE 80, GALV, 1-1/4" x 3"				
20	888-3011-107PB	TEE, GALV, 1-1/4"				
21	888-3014-107PB	PIPE PLUG, GALV, 1-1/4"				
22	888-4115-005PB	BLOWDOWN HOSE ASSY, 3/4" x 18", SURVIVOR™, 4 PLY, WP 150 PSI **(FOR ALL PORTABLE BLASTERS)**				
	888-4115-00503PB	BLOWDOWN HOSE ASSY, 3/4" x 3', SURVIVOR™, 4 PLY, WP 150 PSI				
	888-4115-00510PB	BLOWDOWN HOSE ASSY, 3/4" x 10', SURVIVOR™, 4 PLY, WP 150 PSI				
	888-4115-00515PB	BLOWDOWN HOSE ASSY, 3/4" x 15', SURVIVOR™, 4 PLY, WP 150 PSI				
23	888-2301-90290PB	STRAINER, BRZ 1/4" 90 MICRON				
24	888-4101-002PB	HOSE, AIR, INSTA-GRIP, BLACK, NOMINAL 1/4" ID, 300 PSI				
25	888-4203-50000PB	SWIVEL 90°, 1/8"MNPT X 1/8"F				
26	888-4200-30200PB	HOSE, PUSH-ON INSERT 1/4" x 1/8" NPT				
27	888-4203-50202PB	SWIVEL 90°, 1/4"MNPT x 1/4"F				
28	888-4200-30202PB	HOSE, PUSH-ON INSERT 1/4" x 1/4" NPT				
29	888-4203-50002PB	SWIVEL 90°, 1/8" MNPT x 1/4" F				
30	888-4201-50202PB	STRAIGHT SWIVEL, 1/4"MNPT x 1/4"F				
31	888-3031-30202PB	HEX NIPPLE 1/4" NPT x 1/4" W/BALL ST				
32	888-3011-102PB	TEE, GALV, 1/4"				
33	888-2229-000PB	VALVE, CONTROL, PNEUMATIC (NORMALLY CLOSED)				
	888-2229-00099PB	VALVE, CONTROL, PNEUMATIC, REPAIR KIT, HEAVY DUTY				
34	888-2229-010PB	VALVE, CONTROL, PNEUMATIC (NORMALLY OPEN)				
	888-2229-00099PB	VALVE, CONTROL, PNEUMATIC, REPAIR KIT, HEAVY DUTY				
35	888-2013-402PB	DUST ELIMINATOR, 1/4" MNPT				
36	888-3006-102PB	ELBOW, STREET, 90°, GALV, 1/4"				
37	888-7033-002PB	BRACKET, CONTROL VALVE				
38	888-4224-30102PB	BRASS SOCKET, 1/4"				
39	888-4224-30002PB	PLUG, 1/4"				
40**	888-2263-000PB	HANDLE, CONTROL, PNEUMATIC (DEADMAN CONTROL HANDLE)				
	888-2263-001PB	HANDLE, CONTROL, PNEUMATIC #2 (DEADMAN CONTROL HANDLE) **(STANDARD INCLUDED HANDLE)**				
	888-2263-002PB	HANDLE, CONTROL, PNEUMATIC #3 (DEADMAN CONTROL HANDLE)				
41	888-4100-50102PB	HOSE, TWINLINE ASSY 55' ACO W/ABRASIVE CUTOFF SWITCH				
	888-4100-70102PB	HOSE, TWINLINE ASSY 110' ACO W/ABRASIVE CUTOFF SWITCH				
42	888-2025-010PB	VALVE, ABRASIVE CUTOFF (PNEU)				
43	888-2025-10001PB	TOGGLE SWITCH GUARD				
44	888-3026-50200PB	BUSHING, PLATED 1/4" x 1/8"NPT				
45	888-2229-301PB	VALVE, CONTROL, KNOB OPERATED 3W2P				
	888-2229-30199PB	VALVE, CONTROL, KNOB OPERATED 3W2P, REPAIR KIT, HEAVY DUTY				
46	888-4100-301PB	HOSE, TWINLINE CONTROL, ASSEMBLY, YEL/YEL W/BLACK STRIPE, NOMINAL 3/16" ID x 25'				
47	888-3028-10799PB	NIPPLE, TBE, SCHEDULE 80, GALV, 1-1/4" x CLOSED				
48	888-3028-10711PB	NIPPLE, TBE, SCHEDULE 80, GALV, 1-1/4" x 3"			888-3028-10714PB	NIPPLE, TBE, SCHEDULE 80, GALV, 1-1/4" x 4"
49	888-3000-102PB	ELBOW, GALV, 90°, 1/4"				
50	888-3029-10209PB	NIPPLE, TBE, GALV, 1/4" x 2"				
51	888-4203-50200PB	SWIVEL 90°, 1/4" MNPT x 1/8" F				
52	888-3031-30606PB	HEX NIPPLE, 1" x 1"	888-3031-30707PB	HEX NIPPLE, 1-1/4" x 1-1/4"	888-3031-30808PB	HEX NIPPLE, 1-1/2" x 1-1/2"
53	888-3029-10711PB	NIPPLE, TBE, GALV, 1-1/4" x 3"			888-3029-10814PB	NIPPLE, TBE, GALV, 1-1/2" x 4"

* See "***Valve Parts Lists***" Section for detailed parts list.

** See "***Control Handle Parts Lists***" Section for detailed parts list.

Copyright © 2022-2030 Pirate Brand®, All Rights Reserved

Pipe String Parts Lists

SPR SERIES - Electric On Cord Abrasive Cut-Off

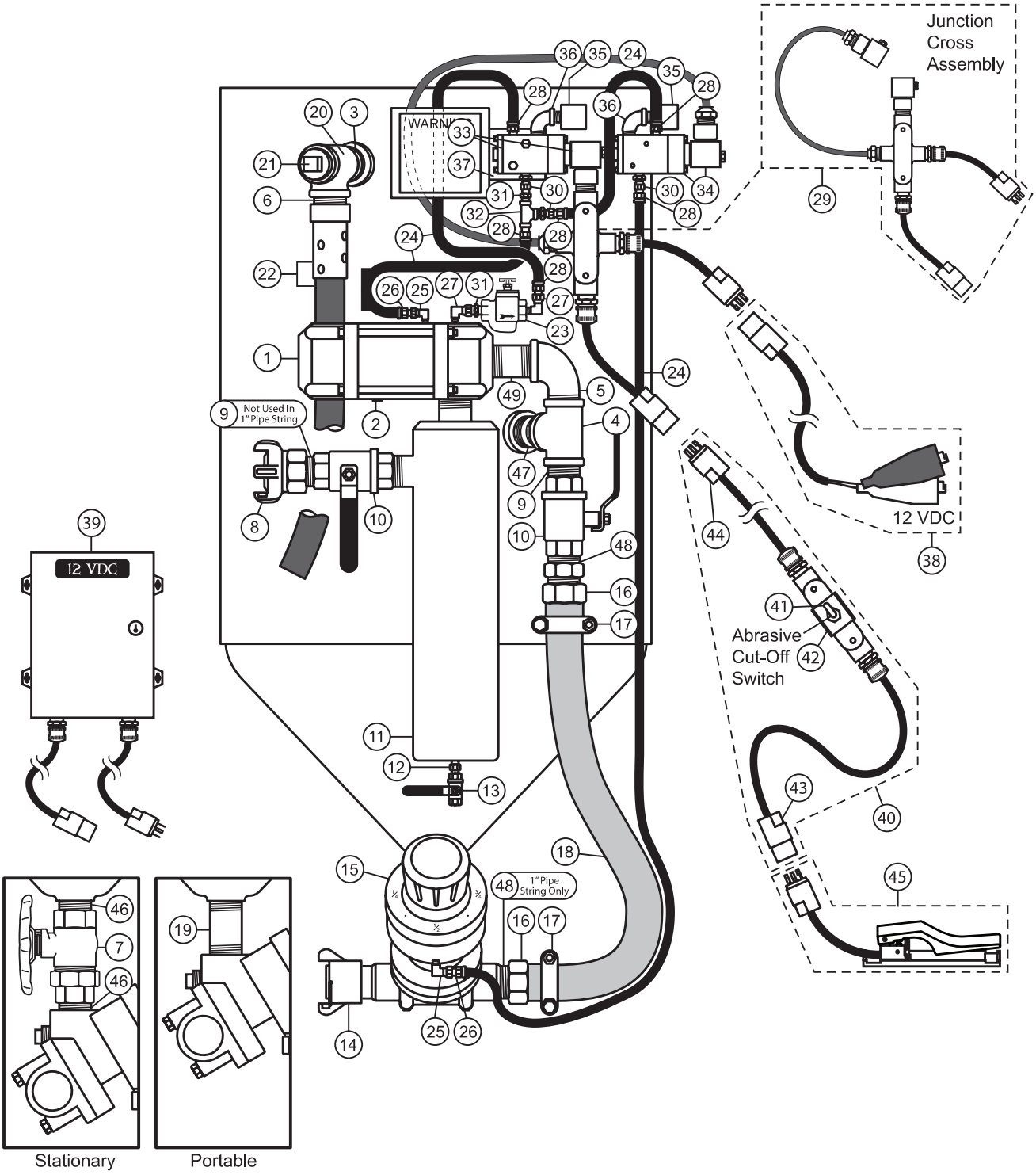

Copyright © 2022-2030 Pirate Brand®, All Rights Reserved

Pipe String Parts Lists

3.5/6.5 Cu Ft SPR Abrasive Blasters - Elec. On Cord Abr. Cut-Off - Parts List

	1" PIPE STRING		1-1/4" PIPE STRING		1-1/2" BIG-GUN™ PIPE STRING	
1*	888-2223-000PB	VALVE, COMBINATION, 1-1/4"			888-2225-001PB	VALVE, COMBINATION II, 1-1/2", **BIG-GUN™**
	888-2225-000PB	VALVE, COMBINATION II, 1-1/4"				
2	888-2014-300PB	VENT, 1/8"				
3	888-3029-10711PB	NIPPLE, TBE, GALV, 1-1/4" x 3"			888-3029-10714PB	NIPPLE, TBE, GALV, 1-1/4" x 4"
4	888-3013-10706PB	TEE, GALV, 1-1/4" x 1" x 1-1/4"	888-3011-107PB	TEE, GALV, 1-1/4"	888-3038-10807PB	TEE REDUCING, GALV, 1-1/2" x 1-1/2" x 1-1/4"
5	888-3006-107PB	ELBOW, STREET, 90°, GALV, 1-1/4"			888-3006-108PB	ELBOW, STREET, 90°, GALV, 1-1/2"
6	888-3029-10799PB	NIPPLE, TBE, GALV, 1-1/4" x CLOSED				
7	888-2408-907PB	BALL VALVE, UNION END, 1-1/4", BIG-BORE™, W/ HALF HANDLE				
8	UM-100	AIR HOSE COUPLING, 2 LUG, 1" MALE NPT	UF-125	AIR HOSE COUPLINGS, 4 LUG, 1-1/4" FEMALE NPT	UF-150	AIR HOSE COUPLINGS, 4 LUG, 1-1/2" FEMALE NPT
9	888-3029-10699PB	NIPPLE, TBE, GALV, 1" x CLOSED	888-3029-10799PB	NIPPLE, TBE, GALV, 1-1/4" x CLOSED	888-3029-10899PB	NIPPLE, TBE, GALV, 1-1/2" x CLOSED
10	VB100	BALL VALVE, FULL PORT, 1" NPT	VB125	BALL VALVE, FULL PORT, 1-1/4" NPT	VB150	BALL VALVE, FULL PORT, 1-1/2" NPT
11	888-1200-006PB	MOISTURE TRAP 1"	888-1200-007PB	MOISTURE TRAP 1-1/4"	888-1200-010PB	MOISTURE TRAP 1-1/2", **BIG-GUN™**
12	888-3031-31202PB	NIPPLE, HEX 1/4" MNPT x 1/4" MNPT				
13	VB025	BALL VALVE, FULL PORT, 1/4" NPT				
14	SB-2-IR	THD QUICK COUPLING, IRON, 1-1/2"	SB-1S-IR	THD CPLG, STD NPS, IRON, 1-1/4"	SB-3X-AL	THD QUICK COUPLING, ALUMINUM, 1-1/2", FULL PORT
15*	888-2149-106PB	APV, 1", W/ URETHANE SLEEVE	888-2149-107PB	APV, 1-1/4", W/ URETHANE SLEEVE	888-2149-108PB	APV, 1-1/2", W/ URETHANE SLEEVE
	888-2149-006PB	APV, 1", W/ TUNGSTEN CARBIDE SLEEVE	888-2149-007PB	APV, 1-1/4", W/ TUNGSTEN CARBIDE SLEEVE	888-2149-008PB	APV, 1-1/2", W/ TUNGSTEN CARBIDE SLEEVE
	888-2148-006PB	APV II, 1" W/ SOLID TUNGSTEN CARBIDE SLEEVE	888-2148-007PB	APV II, 1-1/4" W/ SOLID TUNGSTEN CARBIDE SLEEVE	888-2148-008PB	APV II, 1-1/2" W/ SOLID TUNGSTEN CARBIDE SLEEVE
16	888-4205-106PB	HOSE, INSERT SWIVEL, 1", INCLUDES GASKET	888-4205-107PB	HOSE, INSERT SWIVEL, 1-1/4", INCLUDES GASKET	888-4205-108PB	HOSE, INSERT SWIVEL, 1-1/2", INCLUDES GASKET
	888-4205-10699PB	HOSE, SWIVEL GASKET, 1"	888-4205-10799PB	HOSE, SWIVEL GASKET, 1-1/4"	888-4205-10899PB	HOSE, SWIVEL GASKET, 1-1/2"
17	888-4235-006PB	HOSE, CLAMP, DOUBLE BOLT, 1"	888-4235-007PB	HOSE, CLAMP, DOUBLE BOLT, 1-1/4"	888-4235-008PB	HOSE, CLAMP, DOUBLE BOLT, 1-1/2"
18	112-0100	HOSE, AIR, RED, NOMINAL 1" ID x 1-1/2" OD, WP 300 PSI	112-0114	HOSE, AIR, RED, NOMINAL 1-1/4" ID x 1-51/64" OD, WP 250 PSI	112-0112	HOSE, AIR, RED, NOMINAL 1-1/2" ID x 2-3/32" OD, WP 250 PSI
19	888-3028-10711PB	NIPPLE, TBE, SCHEDULE 80, GALV, 1-1/4" x 3"				
20	888-3011-107PB	TEE, GALV, 1-1/4"				
21	888-3014-107PB	PIPE PLUG, GALV, 1-1/4"				
22	888-4115-005PB	BLOWDOWN HOSE ASSY, 3/4" x 18", SURVIVOR™, 4 PLY, WP 150 PSI **(FOR ALL PORTABLE BLASTERS)**				
	888-4115-00503PB	BLOWDOWN HOSE ASSY, 3/4" x 3', SURVIVOR™, 4 PLY, WP 150 PSI				
	888-4115-00510PB	BLOWDOWN HOSE ASSY, 3/4" x 10', SURVIVOR™, 4 PLY, WP 150 PSI				
	888-4115-00515PB	BLOWDOWN HOSE ASSY, 3/4" x 15', SURVIVOR™, 4 PLY, WP 150 PSI				
23	888-2301-90290PB	STRAINER, BRZ 1/4" 90 MICRON				
24	888-4101-002PB	HOSE, AIR, INSTA-GRIP, BLACK, NOMINAL 1/4" ID, 300 PSI				
25	888-4203-50000PB	SWIVEL 90°, 1/8"MNPT X 1/8"F				
26	888-4200-30200PB	HOSE, PUSH-ON INSERT 1/4" x 1/8" NPT				
27	888-4203-50202PB	SWIVEL 90°, 1/4"MNPT x 1/4"F				
28	888-4200-30202PB	HOSE, PUSH-ON INSERT 1/4" x 1/4" NPT				
29	888-7112-00002PB	JUNCTION CROSS ASSEMBLY, SMALL & BULK BLASTERS, 12VDC, ACO ON CORD W/ TWIST-LOCK CONNECTORS, (1) OUTLET				
	888-7112-00002PB-01	JUNCTION CROSS ASSEMBLY, SMALL & BULK BLASTERS, 12VDC, ACO ON CORD W/ SEALED WATERPROOF CONNECTORS, (1) OUTLET				
30	888-4201-50202PB	STRAIGHT SWIVEL, 1/4"MNPT x 1/4"F				
31	888-3031-30202PB	HEX NIPPLE 1/4" NPT x 1/4" W/BALL ST				
32	888-3011-102PB	TEE, GALV, 1/4"				
33	888-2229-100PB	VALVE, CONTROL, ELECTRIC, 12VDC (NORMALLY CLOSED)				
	888-2229-10099PB	VALVE, CONTROL, REPAIR KIT, ELECTRIC, HEAVY DUTY				
34	888-2229-600PB	VALVE, CONTROL, ELECTRIC, 12VDC (NORMALLY OPEN)				
	888-2229-10099PB	VALVE, CONTROL, REPAIR KIT, ELECTRIC, HEAVY DUTY				
35	888-2013-402PB	DUST ELIMINATOR, 1/4" MNPT				
36	888-3006-102PB	ELBOW, STREET, 90°, GALV, 1/4"				
37	888-7033-002PB	BRACKET, CONTROL VALVE				
38	888-7072-012PB	POWER CORD, 25' 12VDC, 3-LUG, X-TREME DUTY™ URETHANE CORD				
	888-7072-01201PB	POWER CORD W/SEALED WATERPROOF CONNECTOR, 25' 12VDC, 3 PRONG, X-TREME DUTY™ URETHANE CORD				
39	PB-SMP3WP	POWER SUPPLY 120AC INPUT/12VDC @ 2.5 AMP OUTPUT, 4 CONTROL VALVE MAX LOAD, 3 PRONG CONNECTOR, X-TREME DUTY™ URETHANE CORD				
40	888-7075-055PB	CORD W/TWIST-LOCK CONNECTORS & ABRASIVE CUTOFF SWITCH ASSEMBLY, 55', 3-PRONG, 3-WIRE, X-TREME DUTY™ URETHANE CONTROL CORD				
	888-7075-110PB	CORD W/TWIST-LOCK CONNECTORS & ABRASIVE CUTOFF SWITCH ASSEMBLY, 110', 3-PRONG, 3-WIRE, X-TREME DUTY™ URETHANE CONTROL CORD				
	888-7075-05501PB	CORD W/SEALED WATERPROOF CONNECTORS & ABRASIVE CUTOFF SWITCH ASSEMBLY, 55', 3 PRONG, 3 WIRE, X-TREME DUTY™ URETHANE CONTROL CORD				
	888-7075-11001PB	CORD W/SEALED WATERPROOF CONNECTORS & ABRASIVE CUTOFF SWITCH ASSEMBLY, 110', 3 PRONG, 3 WIRE, X-TREME DUTY™ URETHANE CONTROL CORD				
41	888-2025-10002PB	ABRA CUTOFF SWITCH (ELEC)				
42	888-2025-10001PB	TOGGLE SWITCH GUARD				
43	888-7109-300PB	ELECTRIC CONNECTOR, FEMALE, TWIST-LOCK, 3 PRONG				
	888-7109-30002PB	ELECTRIC CONNECTOR, SEALED WATERPROOF, FEMALE, 3 PRONG (APPROPRIATE FOR USE WITH STEEL ABRASIVES)				
44	888-7109-301PB	ELECTRIC CONNECTOR, MALE, TWIST-LOCK, 3 PRONG				
	888-7109-30102PB	ELECTRIC CONNECTOR, SEALED WATERPROOF, MALE, 3 PRONG (APPROPRIATE FOR USE WITH STEEL ABRASIVES)				
45**	888-2263-40001PB	HANDLE, CONTROL, ELECTRIC w/TWIST-LOCK PLUG **(NOT FOR USE WITH STEEL ABRASIVES)**				
	888-2263-40101PB	HANDLE, CONTROL, ELECTRIC #2 w/TWIST-LOCK PLUG **(NOT FOR USE WITH STEEL ABRASIVES) (STANDARD INCLUDED NON-SEALED CONNECTOR HANDLE)**				
	888-2263-40102PB	HANDLE, CONTROL, ELECTRIC #2 w/3 PART SEALED STRAIN RELIEF **(APPROPRIATE FOR USE WITH STEEL ABRASIVES)**				
	888-2263-40104PB	HANDLE, CONTROL, ELECTRIC #2 w/**SEALED WATERPROOF CONNECTOR (APPROPRIATE FOR USE WITH STEEL ABRASIVES)**				
46	888-3028-10799PB	NIPPLE, TBE, SCHEDULE 80, GALV, 1-1/4" x CLOSED				
47	888-3028-10711PB	NIPPLE, TBE, SCHEDULE 80, GALV, 1-1/4" x 3"			888-3028-10714PB	NIPPLE, TBE, SCHEDULE 80, GALV, 1-1/4" x 4"
48	888-3031-30606PB	HEX NIPPLE, 1" x 1"	888-3031-30707PB	HEX NIPPLE, 1-1/4" x 1-1/4"	888-3031-30808PB	HEX NIPPLE, 1-1/2" x 1-1/2"
49	888-3029-10711PB	NIPPLE, TBE, GALV, 1-1/4" x 3"			888-3029-10814PB	NIPPLE, TBE, GALV, 1-1/2" x 4"

* See "***Valve Parts Lists***" Section for detailed parts list.

** See "***Control Handle Parts Lists***" Section for detailed parts list.

Copyright © 2022-2030 Pirate Brand®, All Rights Reserved

Pipe String Parts Lists

SPR SERIES - Electric Remote Switch Abrasive Cut-Off

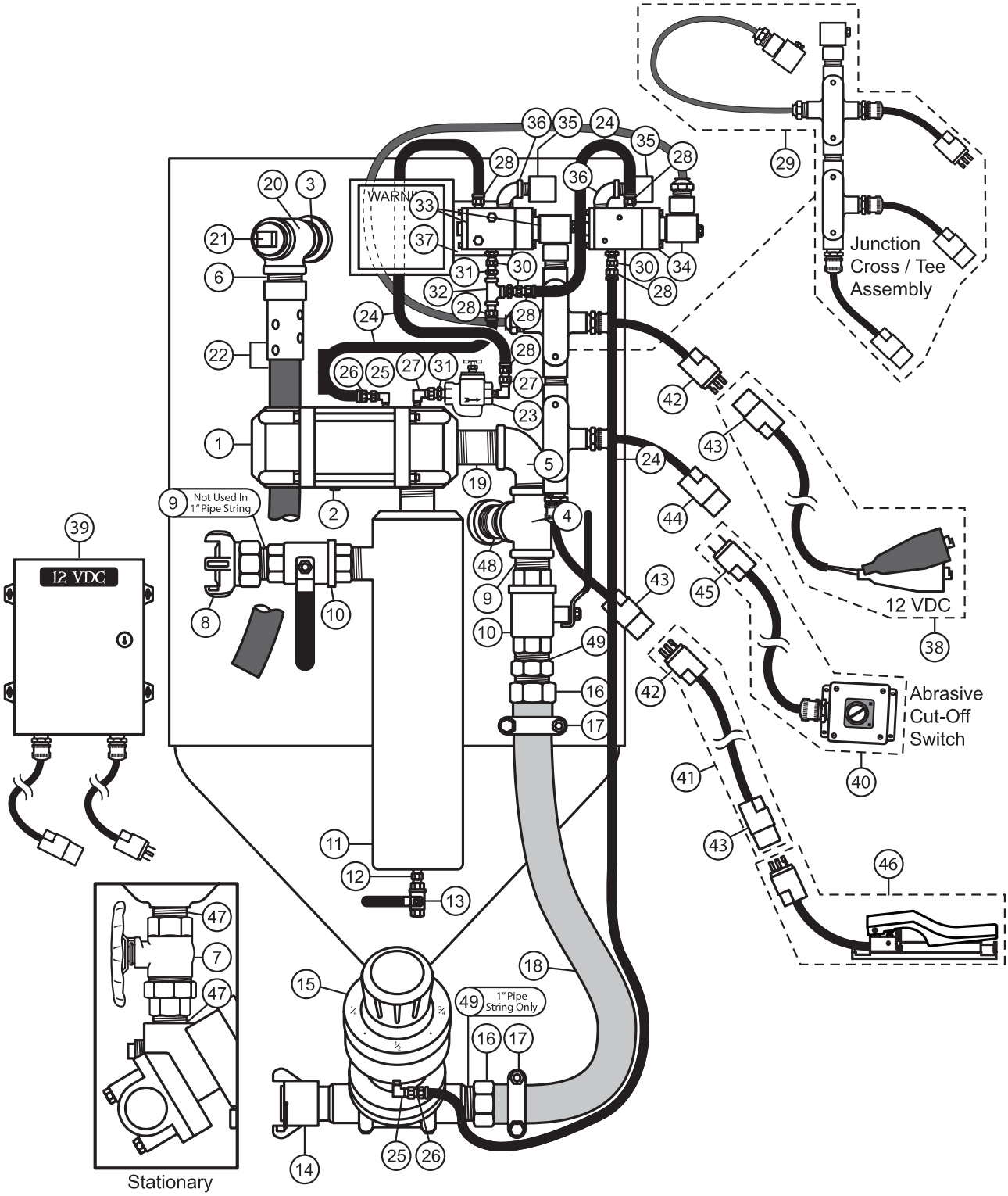

Copyright © 2022-2030 Pirate Brand®, All Rights Reserved

Pipe String Parts Lists

3.5/6.5 Cu Ft SPR Abrasive Blasters - Elec. Remote Abr. Cut-Off - Parts List

	1" PIPE STRING		1-1/4" PIPE STRING		1-1/2" BIG-GUN™ PIPE STRING	
1*	888-2223-000PB	VALVE, COMBINATION, 1-1/4"			888-2225-001PB	VALVE, COMBINATION II, 1-1/2", **BIG-GUN™**
	888-2225-000PB	VALVE, COMBINATION II, 1-1/4"				
2	888-2014-300PB	VENT, 1/8"				
3	888-3029-10711PB	NIPPLE, TBE, GALV, 1-1/4" x 3"			888-3029-10714PB	NIPPLE, TBE, GALV, 1-1/4" x 4"
4	888-3013-10706PB	TEE, GALV, 1-1/4" x 1" x 1-1/4"	888-3011-107PB	TEE, GALV, 1-1/4"	888-3038-10807PB	TEE REDUCING, GALV, 1-1/2" x 1-1/2" x 1-1/4"
5	888-3006-107PB	ELBOW, STREET, 90°, GALV, 1-1/4"			888-3006-108PB	ELBOW, STREET, 90°, GALV, 1-1/2"
6	888-3029-10799PB	NIPPLE, TBE, GALV, 1-1/4" x CLOSED				
7	888-2408-907PB	BALL VALVE, UNION END, 1-1/4", BIG-BORE™, W/ HALF HANDLE				
8	UM-100	AIR HOSE COUPLING, 2 LUG, 1" MALE NPT	UF-125	AIR HOSE COUPLINGS, 4 LUG, 1-1/4" FEMALE NPT	UF-150	AIR HOSE COUPLINGS, 4 LUG, 1-1/2" FEMALE NPT
9	888-3029-10699PB	NIPPLE, TBE, GALV, 1" x CLOSED	888-3029-10799PB	NIPPLE, TBE, GALV, 1-1/4" x CLOSED	888-3029-10899PB	NIPPLE, TBE, GALV, 1-1/2" x CLOSED
10	VB100	BALL VALVE, FULL PORT, 1" NPT	VB125	BALL VALVE, FULL PORT, 1-1/4" NPT	VB150	BALL VALVE, FULL PORT, 1-1/2" NPT
11	888-1200-006PB	MOISTURE TRAP 1"	888-1200-007PB	MOISTURE TRAP 1-1/4"	888-1200-010PB	MOISTURE TRAP 1-1/2", **BIG-GUN™**
12	888-3031-31202PB	NIPPLE, HEX 1/4" MNPT x 1/4" MNPT				
13	VB025	BALL VALVE, FULL PORT, 1/4" NPT				
14	SB-2-IR	THD QUICK COUPLING, IRON, 1-1/2"	SB-1S-IR	THD CPLG, STD NPS, IRON, 1-1/4"	SB-3X-AL	THD QUICK COUPLING, ALUMINUM, 1-1/2", FULL PORT
15*	888-2149-106PB	APV, 1", W/ URETHANE SLEEVE	888-2149-107PB	APV, 1-1/4", W/ URETHANE SLEEVE	888-2149-108PB	APV, 1-1/2", W/ URETHANE SLEEVE
	888-2149-006PB	APV, 1", W/ TUNGSTEN CARBIDE SLEEVE	888-2149-007PB	APV, 1-1/4", W/ TUNGSTEN CARBIDE SLEEVE	888-2149-008PB	APV, 1-1/2", W/ TUNGSTEN CARBIDE SLEEVE
	888-2148-006PB	APV II, 1" W/ SOLID TUNGSTEN CARBIDE SLEEVE	888-2148-007PB	APV II, 1-1/4" W/ SOLID TUNGSTEN CARBIDE SLEEVE	888-2148-008PB	APV II, 1-1/2" W/ SOLID TUNGSTEN CARBIDE SLEEVE
16	888-4205-106PB	HOSE, INSERT SWIVEL, 1", INCLUDES GASKET	888-4205-107PB	HOSE, INSERT SWIVEL, 1-1/4", INCLUDES GASKET	888-4205-108PB	HOSE, INSERT SWIVEL, 1-1/2", INCLUDES GASKET
	888-4205-10699PB	HOSE, SWIVEL GASKET, 1"	888-4205-10799PB	HOSE, SWIVEL GASKET, 1-1/4"	888-4205-10899PB	HOSE, SWIVEL GASKET, 1-1/2"
17	888-4235-006PB	HOSE, CLAMP, DOUBLE BOLT, 1"	888-4235-007PB	HOSE, CLAMP, DOUBLE BOLT, 1-1/4"	888-4235-008PB	HOSE, CLAMP, DOUBLE BOLT, 1-1/2"
18	112-0100	HOSE, AIR, RED, NOMINAL 1" ID x 1-1/2" OD, WP 300 PSI	112-0114	HOSE, AIR, RED, NOMINAL 1-1/4" ID x 1-51/64" OD, WP 250 PSI	112-0112	HOSE, AIR, RED, NOMINAL 1-1/2" ID x 2-3/32" OD, WP 250 PSI
19	888-3029-10711PB	NIPPLE, TBE, GALV, 1-1/4" x 3"			888-3029-10814PB	NIPPLE, TBE, GALV, 1-1/2" x 4"
20	888-3011-107PB	TEE, GALV, 1-1/4"				
21	888-3014-107PB	PIPE PLUG, GALV, 1-1/4"				
22	888-4115-005PB	BLOWDOWN HOSE ASSY, 3/4" x 18", SURVIVOR™, 4 PLY, WP 150 PSI **(FOR ALL PORTABLE BLASTERS)**				
	888-4115-00503PB	BLOWDOWN HOSE ASSY, 3/4" x 3', SURVIVOR™, 4 PLY, WP 150 PSI				
	888-4115-00510PB	BLOWDOWN HOSE ASSY, 3/4" x 10', SURVIVOR™, 4 PLY, WP 150 PSI				
	888-4115-00515PB	BLOWDOWN HOSE ASSY, 3/4" x 15', SURVIVOR™, 4 PLY, WP 150 PSI				
23	888-2301-90290PB	STRAINER, BRZ 1/4" 90 MICRON				
24	888-4101-002PB	HOSE, AIR, INSTA-GRIP, BLACK, NOMINAL 1/4" ID, 300 PSI				
25	888-4203-50000PB	SWIVEL 90°, 1/8"MNPT X 1/8"F				
26	888-4200-30200PB	HOSE, PUSH-ON INSERT 1/4" x 1/8" NPT				
27	888-4203-50202PB	SWIVEL 90°, 1/4"MNPT x 1/4"F				
28	888-4200-30202PB	HOSE, PUSH-ON INSERT 1/4" x 1/4" NPT				
29	888-7112-00004PB	JUNCTION CROSS/TEE ASSEMBLY, SMALL & BULK BLASTERS, 12VDC, SSACO W/ TWIST-LOCK CONNECTORS, (1) OUTLET				
	888-7112-00004PB-01	JUNCTION CROSS/TEE ASSEMBLY, SMALL & BULK BLASTERS, 12VDC, SSACO W/ SEALED WATERPROOF CONNECTORS, (1) OUTLET				
30	888-4201-50202PB	STRAIGHT SWIVEL, 1/4"MNPT x 1/4"F				
31	888-3031-30202PB	HEX NIPPLE 1/4" NPT x 1/4" W/BALL ST				
32	888-3011-102PB	TEE, GALV, 1/4"				
33	888-2229-100PB	VALVE, CONTROL, ELECTRIC, 12VDC (NORMALLY CLOSED)				
	888-2229-10099PB	VALVE, CONTROL, REPAIR KIT, ELECTRIC, HEAVY DUTY				
34	888-2229-600PB	VALVE, CONTROL, ELECTRIC, 12VDC (NORMALLY OPEN)				
	888-2229-10099PB	VALVE, CONTROL, REPAIR KIT, ELECTRIC, HEAVY DUTY				
35	888-2013-402PB	DUST ELIMINATOR, 1/4" MNPT				
36	888-3006-102PB	ELBOW, STREET, 90°, GALV, 1/4"				
37	888-7033-002PB	BRACKET, CONTROL VALVE				
38	888-7072-012PB	POWER CORD, 25' 12VDC, 3-LUG, X-TREME DUTY™ URETHANE CORD				
	888-7072-01201PB	POWER CORD W/SEALED WATERPROOF CONNECTOR, 25' 12VDC, 3 PRONG, X-TREME DUTY™ URETHANE CORD				
39	PB-SMP3WP	POWER SUPPLY 120AC INPUT/12VDC @ 2.5 AMP OUTPUT, 4 CONTROL VALVE MAX LOAD, 3 PRONG CONNECTOR, X-TREME DUTY™ URETHANE CORD				
40	999-8400-35104PB-02	SELECTOR SWITCH OPERATOR W/ TWIST-LOCK CONNECTOR, 25' CORD, 2 PRONG, X-TREME DUTY™ URETHANE CONTROL CORD				
	999-8400-35104PB-04	SELECTOR SWITCH OPERATOR W/ SEALED WATERPROOF CONNECTOR, 25' CORD, 2 PRONG, X-TREME DUTY™ URETHANE CONTROL CORD				
41	888-7073-055PB	EXTN CORD W/TWIST-LOCK CONNECTORS, 55', 3 PRONG, 2 WIRE, X-TREME DUTY™ URETHANE CONTROL CORD				
	888-7073-110PB	EXTN CORD W/TWIST-LOCK CONNECTORS, 110', 3 PRONG, 2 WIRE, X-TREME DUTY™ URETHANE CONTROL CORD				
	888-7074-05501PB	EXTN CORD W/SEALED WATERPROOF CONNECTORS, 55', 3 PRONG, 3 WIRE, X-TREME DUTY™ URETHANE CONTROL CORD				
	888-7074-11001PB	EXTN CORD W/SEALED WATERPROOF CONNECTORS, 110', 3 PRONG, 3 WIRE, X-TREME DUTY™ URETHANE CONTROL CORD				
42	888-7109-301PB	ELECTRIC CONNECTOR, MALE, TWIST-LOCK, 3 PRONG				
	888-7109-30102PB	ELECTRIC CONNECTOR, SEALED WATERPROOF, MALE, 3 PRONG (APPROPRIATE FOR USE WITH STEEL ABRASIVES)				
43	888-7109-300PB	ELECTRIC CONNECTOR, FEMALE, TWIST-LOCK, 3 PRONG				
	888-7109-30002PB	ELECTRIC CONNECTOR, SEALED WATERPROOF, FEMALE, 3 PRONG (APPROPRIATE FOR USE WITH STEEL ABRASIVES)				
44	10-352	FEMALE TWIST-LOCK CONNECTOR, 2 PRONG				
	888-7109-20002PB	ELECTRIC CONNECTOR, SEALED WATERPROOF, FEMALE, 2 PRONG (APPROPRIATE FOR USE WITH STEEL ABRASIVES)				
45	10-354	MALE TWIST-LOCK CONNECTOR, 2 PRONG				
	888-7109-20102PB	ELECTRIC CONNECTOR, SEALED WATERPROOF, MALE, 2 PRONG (APPROPRIATE FOR USE WITH STEEL ABRASIVES)				
46**	888-2263-40001PB	HANDLE, CONTROL, ELECTRIC w/TWIST-LOCK PLUG **(NOT FOR USE WITH STEEL ABRASIVES)**				
	888-2263-40101PB	HANDLE, CONTROL, ELECTRIC #2 w/TWIST-LOCK PLUG **(NOT FOR USE WITH STEEL ABRASIVES)** **(STANDARD INCLUDED NON-SEALED CONNECTOR HANDLE)**				
	888-2263-40102PB	HANDLE, CONTROL, ELECTRIC #2 w/3 PART SEALED STRAIN RELIEF **(APPROPRIATE FOR USE WITH STEEL ABRASIVES)**				
	888-2263-40104PB	HANDLE, CONTROL, ELECTRIC #2 w/**SEALED WATERPROOF CONNECTOR** **(APPROPRIATE FOR USE WITH STEEL ABRASIVES)**				
47	888-3028-10799PB	NIPPLE, TBE, SCHEDULE 80, GALV, 1-1/4" x CLOSED				
48	888-3028-10711PB	NIPPLE, TBE, SCHEDULE 80, GALV, 1-1/4" x 3"			888-3028-10714PB	NIPPLE, TBE, SCHEDULE 80, GALV, 1-1/4" x 4"
49	888-3031-30606PB	HEX NIPPLE, 1" x 1"	888-3031-30707PB	HEX NIPPLE, 1-1/4" x 1-1/4"	888-3031-30808PB	HEX NIPPLE, 1-1/2" x 1-1/2"

* See "***Valve Parts Lists***" Section for detailed parts list.

** See "***Control Handle Parts Lists***" Section for detailed parts list.

Copyright © 2022-2030 Pirate Brand®, All Rights Reserved

Pipe String Parts Lists

SHORT-CYCLE™ BIG-GUN™ - Pneumatic Controls

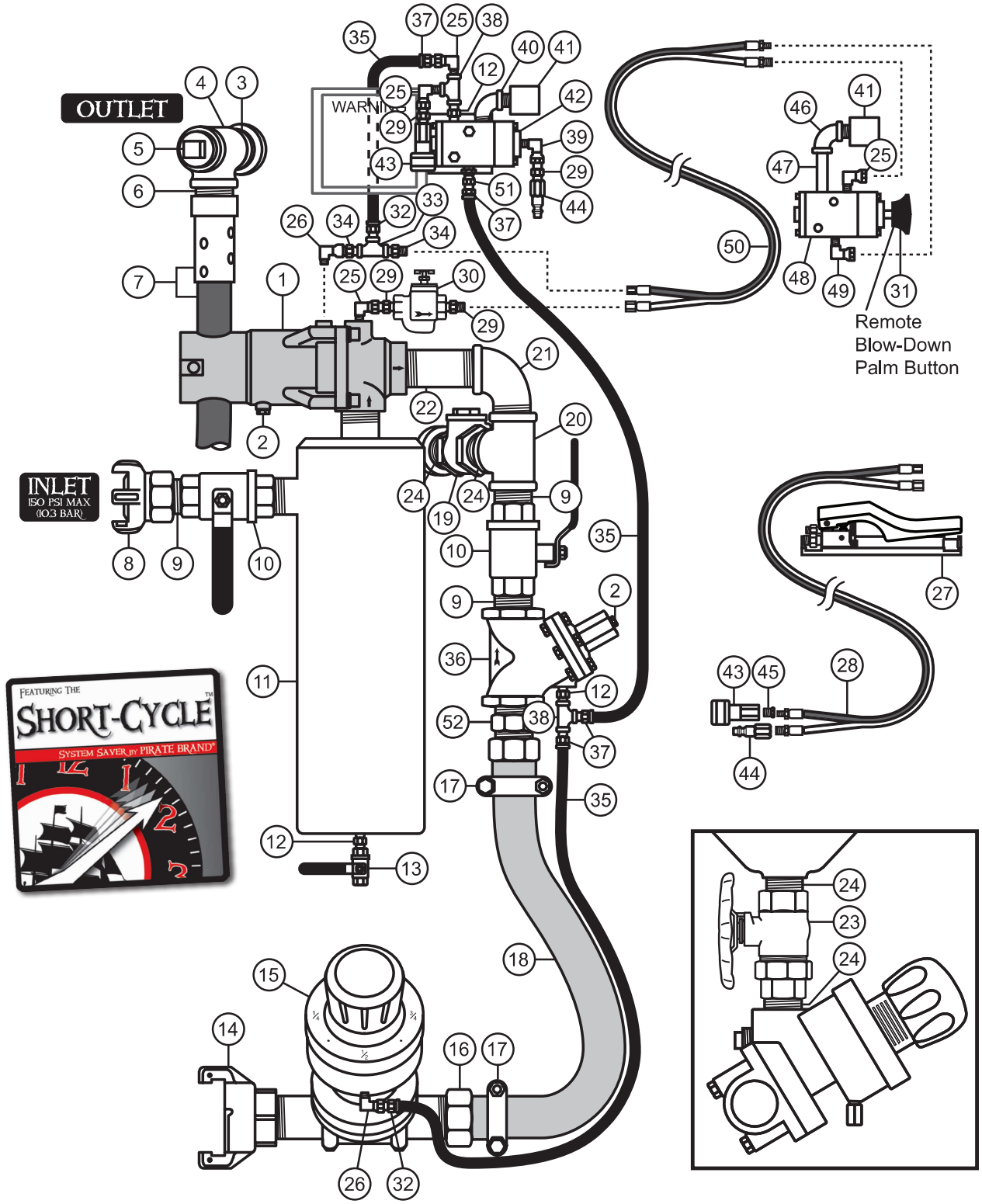

Copyright © 2022-2030 Pirate Brand®, All Rights Reserved

Pipe String Parts Lists

6.5 Cu Ft SHORT-CYCLE™ BIG-GUN™ Abrasive Blasters - Pneumatic Controls - Parts List

1*	888-2225-001PB	VALVE, COMBINATION II, 1-1/2", **BIG-GUN™** COMPLETE **(OLDER MODELS MAY USE 1-1/4" COMBINATION VALVE)**
2	888-2014-300PB	VENT, 1/8"
3	888-3029-10714PB	NIPPLE, TBE, GALV, 1-1/4" x 4"
4	888-3011-107PB	TEE, GALV, 1-1/4"
5	888-3014-107PB	PIPE PLUG, GALV, 1-1/4"
6	888-3029-10799PB	NIPPLE, TBE, GALV, 1-1/4" x CLOSED
7	888-4115-005PB	BLOWDOWN HOSE ASSY, 3/4" x 18", SURVIVOR™, 4 PLY, WP 150 PSI **(FOR ALL PORTABLE BLASTERS)**
	888-4115-00503PB	BLOWDOWN HOSE ASSY, 3/4" x 3', SURVIVOR™, 4 PLY, WP 150 PSI
	888-4115-00510PB	BLOWDOWN HOSE ASSY, 3/4" x 10', SURVIVOR™, 4 PLY, WP 150 PSI
	888-4115-00515PB	BLOWDOWN HOSE ASSY, 3/4" x 15', SURVIVOR™, 4 PLY, WP 150 PSI
8	UF-150	AIR HOSE COUPLING, 4 LUG, 1-1/2" FEMALE NPT **(OPTIONAL)**
9	888-3029-10899PB	NIPPLE, TBE, GALV, 1-1/2" x CLOSED
10	VB150	BALL VALVE, FULL PORT, 1-1/2" NPT
11	888-1200-010PB	MOISTURE TRAP, **BIG GUN™**, 1-1/2" NPT (1-1/2" NPT INLET x 1-1/2" NPT OUTLET, 350 CFM **(OLDER MODELS MAY USE 1-1/4" MOISTURE TRAP)**
12	888-3031-31202PB	NIPPLE, HEX 1/4" MNPT x 1/4" MNPT
13	VB025	BALL VALVE, FULL PORT, 1/4" NPT
14	SB-3X-AL	THD QUICK COUPLING, ALUMINUM, 1-1/2", FULL PORT, 150 PSI MAX
15**	888-2149-108PB	APV, 1-1/2", W/ URETHANE SLEEVE
	888-2149-008PB	APV, 1-1/2", W/ TUNGSTEN CARBIDE SLEEVE
	888-2148-008PB	APV II, 1-1/2" W/ SOLID TUNGSTEN CARBIDE SLEEVE **(STANDARD)**
16	888-4205-108PB	HOSE, INSERT SWIVEL, 1-1/2", INCLUDES GASKET
	888-4205-10899PB	HOSE, SWIVEL GASKET, 1-1/2"
17	888-4235-008PB	HOSE, CLAMP, DOUBLE BOLT, 1-1/2"
18	112-0112	HOSE, AIR, RED, NOMINAL 1-1/2" ID x 2-3/32" OD, WP 250 PSI
19	888-2490-90701PB	CHECK VALVE, SWING 1-1/4", W/ 5/32" DIFFERENTIAL EQUALIZER HOLE
20	888-3038-10807PB	TEE REDUCING, GALV, 1-1/2" x 1-1/2" x 1-1/4"
21	888-3006-108PB	ELBOW, STREET, 90°, GALV, 1-1/2"
22	888-3029-10814PB	NIPPLE, TBE, GALV, 1-1/2" x 4"
23	888-2408-907PB	BALL VALVE, UNION END, 1-1/4", BIG-BORE™, W/ HALF HANDLE
24	888-3028-10799PB	NIPPLE, TBE, SCHEDULE 80, GALV, 1-1/4" x CLOSE
25	888-4203-50202PB	SWIVEL 90°, 1/4"MNPT x 1/4"F
26	888-4203-50000PB	SWIVEL 90°, 1/8"MNPT X 1/8"F
27	888-2263-000PB	HANDLE, CONTROL, PNEUMATIC (DEADMAN CONTROL HANDLE)
	888-2263-001PB	HANDLE, CONTROL, PNEUMATIC #2 (DEADMAN CONTROL HANDLE) **(STANDARD INCLUDED HANDLE)**
	888-2263-002PB	HANDLE, CONTROL, PNEUMATIC #3 (DEADMAN CONTROL HANDLE)
28	200-055	HOSE, TWINLINE CONTROL, ASSEMBLY, YEL/YEL W/BLACK STRIPE, NOMINAL 3/16" ID x 55'
	200-110	HOSE, TWINLINE CONTROL, ASSEMBLY, YEL/YEL W/BLACK STRIPE, NOMINAL 3/16" ID x 110'
29	888-3031-30202PB	HEX NIPPLE 1/4" NPT x 1/4" W/BALL ST
30	888-2301-90290PB	STRAINER, BRZ 1/4" 90 MICRON
31	PB-30A01003	PALM BUTTON, BLACK, FITS 888-2229-301PB CONTROL VALVE
32	888-4200-30200PB	HOSE, PUSH-ON INSERT 1/4" x 1/8" NPT
33	888-3011-100PB	TEE, GALV 1/8"
34	888-3031-30000PB	HEX NIPPLE 1/8" NPT x 1/8" W/BALL ST
35	888-4101-002PB	HOSE, AIR, INSTA-GRIP, BLACK, NOMINAL 1/4" ID, 300 PSI
36	888-2123-108PB-L	VALVE, AUTO AIR, 1-1/2" FULL FLOW, (NORMALLY CLOSED)
37	888-4200-30202PB	HOSE, PUSH-ON INSERT 1/4" x 1/4" NPT
38	888-3011-102PB	TEE, GALV, 1/4"
39	888-4203-50002PB	SWIVEL 90°, 1/8" MNPT x 1/4" F
40	888-3006-102PB	ELBOW, STREET, 90°, GALV, 1/4"
41	888-2013-402PB	DUST ELIMINATOR, 1/4" MNPT
42	888-2229-000PB	VALVE, CONTROL, PNEUMATIC (NORMALLY CLOSED)
	888-2229-00099PB	VALVE, CONTROL, PNEUMATIC, REPAIR KIT, HEAVY DUTY
43	888-4224-30102PB	BRASS SOCKET, 1/4"
44	888-4224-30002PB	PLUG, 1/4"
45	888-3026-50200PB	BUSHING, PLATED 1/4" x 1/8"NPT
46	888-3000-102PB	ELBOW, GALV, 90°, 1/4"
47	888-3029-10209PB	NIPPLE, TBE, GALV, 1/4" x 2"
48	888-2229-301PB	VALVE, CONTROL, KNOB OPERATED 3W2P
	888-2229-30199PB	VALVE, CONTROL, KNOB OPERATED 3W2P, REPAIR KIT, HEAVY DUTY
49	888-4203-50200PB	SWIVEL 90°, 1/4" MNPT x 1/8" F
50	888-4100-301PB	HOSE, TWINLINE CONTROL, ASSEMBLY, YEL/YEL W/BLACK STRIPE, NOMINAL 3/16" ID x 25'
51	888-4201-50202PB	STRAIGHT SWIVEL, 1/4"MNPT x 1/4"F
52	888-3031-30808PB	HEX NIPPLE, 1-1/2" x 1-1/2"

* See "***Valve Parts Lists***" Section for detailed parts list.
** See "***Control Handle Parts Lists***" Section for detailed parts list.

Copyright © 2022-2030 Pirate Brand®, All Rights Reserved

Pipe String Parts Lists

SHORT-CYCLE™ BIG-GUN™ - Electric Controls

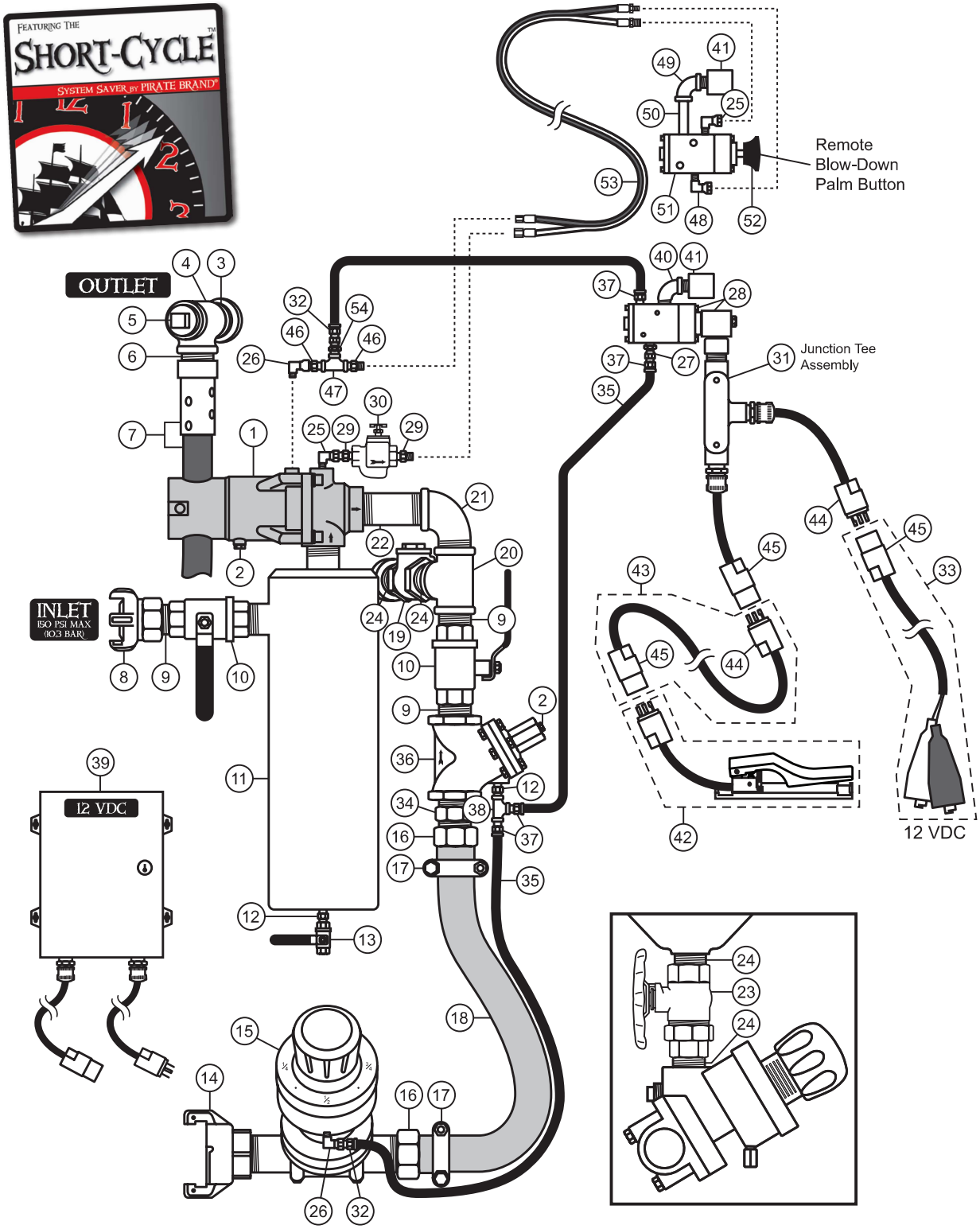

Copyright © 2022-2030 Pirate Brand®, All Rights Reserved

Pipe String Parts Lists

6.5 Cu Ft SHORT-CYCLE™ BIG-GUN™ Abrasive Blasters - Electric Controls - Parts List

1*	888-2225-001PB	VALVE, COMBINATION II, 1-1/2", **BIG-GUN™** COMPLETE **(OLDER MODELS MAY USE 1-1/4" COMBINATION VALVE)**
2	888-2014-300PB	VENT, 1/8"
3	888-3029-10714PB	NIPPLE, TBE, GALV, 1-1/4" x 4"
4	888-3011-107PB	TEE, GALV, 1-1/4"
5	888-3014-107PB	PIPE PLUG, GALV, 1-1/4"
6	888-3029-10799PB	NIPPLE, TBE, GALV, 1-1/4" x CLOSED
7	888-4115-005PB	BLOWDOWN HOSE ASSY, 3/4" x 18", SURVIVOR™, 4 PLY, WP 150 PSI **(FOR ALL PORTABLE BLASTERS)**
	888-4115-00503PB	BLOWDOWN HOSE ASSY, 3/4" x 3', SURVIVOR™, 4 PLY, WP 150 PSI
	888-4115-00510PB	BLOWDOWN HOSE ASSY, 3/4" x 10', SURVIVOR™, 4 PLY, WP 150 PSI
	888-4115-00515PB	BLOWDOWN HOSE ASSY, 3/4" x 15', SURVIVOR™, 4 PLY, WP 150 PSI
8	UF-150	AIR HOSE COUPLING, 4 LUG, 1-1/2" FEMALE NPT **(OPTIONAL)**
9	888-3029-10899PB	NIPPLE, TBE, GALV, 1-1/2" x CLOSED
10	VB150	BALL VALVE, FULL PORT, 1-1/2" NPT
11	888-1200-010PB	MOISTURE TRAP, **BIG GUN™**, 1-1/2" NPT (1-1/2" NPT INLET x 1-1/2" NPT OUTLET, 350 CFM **(OLDER MODELS MAY USE 1-1/4" MOISTURE TRAP)**
12	888-3031-31202PB	NIPPLE, HEX 1/4" MNPT x 1/4" MNPT
13	VB025	BALL VALVE, FULL PORT, 1/4" NPT
14	SB-3X-AL	THD QUICK COUPLING, ALUMINUM, 1-1/2", FULL PORT, 150 PSI MAX
15**	888-2149-108PB	APV, 1-1/2", W/ URETHANE SLEEVE
	888-2149-008PB	APV, 1-1/2", W/ TUNGSTEN CARBIDE SLEEVE
	888-2148-008PB	APV II, 1-1/2" W/ SOLID TUNGSTEN CARBIDE SLEEVE **(STANDARD)**
16	888-4205-108PB	HOSE, INSERT SWIVEL, 1-1/2", INCLUDES GASKET
	888-4205-10899PB	HOSE, SWIVEL GASKET, 1-1/2"
17	888-4235-008PB	HOSE, CLAMP, DOUBLE BOLT, 1-1/2"
18	112-0112	HOSE, AIR, RED, NOMINAL 1-1/2" ID x 2-3/32" OD, WP 250 PSI
19	888-2490-90701PB	CHECK VALVE, SWING 1-1/4", W/ 5/32" DIFFERENTIAL EQUALIZER HOLE
20	888-3038-10807PB	TEE REDUCING, GALV, 1-1/2" x 1-1/2" x 1-1/4"
21	888-3006-108PB	ELBOW, STREET, 90°, GALV, 1-1/2"
22	888-3029-10814PB	NIPPLE, TBE, GALV, 1-1/2" x 4"
23	888-2408-907PB	BALL VALVE, UNION END, 1-1/4", BIG-BORE™, W/ HALF HANDLE
24	888-3028-10799PB	NIPPLE, TBE, SCHEDULE 80, GALV, 1-1/4" x CLOSE
25	888-4203-50202PB	SWIVEL 90°, 1/4"MNPT x 1/4"F
26	888-4203-50000PB	SWIVEL 90°, 1/8"MNPT X 1/8"F
27	888-4201-50202PB	STRAIGHT SWIVEL, 1/4"MNPT x 1/4"F
28	888-2229-100PB	VALVE, CONTROL, ELECTRIC, 12VDC (NORMALLY CLOSED)
	888-2229-10099PB	VALVE, CONTROL, REPAIR KIT, ELECTRIC, HEAVY DUTY
29	888-3031-30202PB	HEX NIPPLE 1/4" NPT x 1/4" W/BALL ST
30	888-2301-90290PB	STRAINER, BRZ 1/4" 90 MICRON
31	888-7112-000PB	JUNCTION TEE ASSEMBLY, SMALL & BULK BLASTERS, 12VDC W/ TWIST-LOCK CONNECTORS, (1) OUTLET
	888-7112-000PB-01	JUNCTION TEE ASSEMBLY, SMALL & BULK BLASTERS, 12VDC W/ SEALED WATERPROOF CONNECTORS, (1) OUTLET
32	888-4200-30200PB	HOSE, PUSH-ON INSERT 1/4" x 1/8" NPT
33	888-7072-012PB	POWER CORD, 25' 12VDC, 3-LUG, X-TREME DUTY™ URETHANE CORD
	888-7072-01201PB	POWER CORD W/SEALED WATERPROOF CONNECTOR, 25' 12VDC, 3 PRONG, X-TREME DUTY™ URETHANE CORD
34	888-3031-30808PB	HEX NIPPLE, 1-1/2" x 1-1/2"
35	888-4101-002PB	HOSE, AIR, INSTA-GRIP, BLACK, NOMINAL 1/4" ID, 300 PSI
36	888-2123-108PB-L	VALVE, AUTO AIR, 1-1/2" FULL FLOW, (NORMALLY CLOSED)
37	888-4200-30202PB	HOSE, PUSH-ON INSERT 1/4" x 1/4" NPT
38	888-3011-102PB	TEE, GALV, 1/4"
39	PB-SMP3WP	POWER SUPPLY 120AC INPUT/12VDC @ 2.5 AMP OUTPUT, 4 CONTROL VALVE MAX LOAD, 3 PRONG CONNECTOR, X-TREME DUTY™ URETHANE CORD
40	888-3006-102PB	ELBOW, STREET, 90°, GALV, 1/4"
41	888-2013-402PB	DUST ELIMINATOR, 1/4" MNPT
42**	888-2263-40001PB	HANDLE, CONTROL, ELECTRIC w/TWIST-LOCK PLUG **(NOT FOR USE WITH STEEL ABRASIVES)**
	888-2263-40101PB	HANDLE, CONTROL, ELECTRIC #2 w/TWIST-LOCK PLUG **(NOT FOR USE WITH STEEL ABRASIVES)** **(STANDARD INCLUDED NON-SEALED CONNECTOR HANDLE)**
	888-2263-40102PB	HANDLE, CONTROL, ELECTRIC #2 w/3 PART SEALED STRAIN RELIEF **(APPROPRIATE FOR USE WITH STEEL ABRASIVES)**
	888-2263-40104PB	HANDLE, CONTROL, ELECTRIC #2 w/**SEALED WATERPROOF CONNECTOR** **(APPROPRIATE FOR USE WITH STEEL ABRASIVES)**
43	888-7073-055PB	EXTN CORD W/TWIST-LOCK CONNECTORS, 55', 3 PRONG, 2 WIRE, X-TREME DUTY™ URETHANE CONTROL CORD
	888-7073-110PB	EXTN CORD W/TWIST-LOCK CONNECTORS, 110', 3 PRONG, 2 WIRE, X-TREME DUTY™ URETHANE CONTROL CORD
	888-7074-05501PB	EXTN CORD W/SEALED WATERPROOF CONNECTORS, 55', 3 PRONG, 3 WIRE, X-TREME DUTY™ URETHANE CONTROL CORD
	888-7074-11001PB	EXTN CORD W/SEALED WATERPROOF CONNECTORS, 110', 3 PRONG, 3 WIRE, X-TREME DUTY™ URETHANE CONTROL CORD
44	888-7109-301PB	ELECTRIC CONNECTOR, MALE, TWIST-LOCK, 3 PRONG
	888-7109-30102PB	ELECTRIC CONNECTOR, SEALED WATERPROOF, MALE, 3 PRONG (APPROPRIATE FOR USE WITH STEEL ABRASIVES)
45	888-7109-300PB	ELECTRIC CONNECTOR, FEMALE, TWIST-LOCK, 3 PRONG
	888-7109-30002PB	ELECTRIC CONNECTOR, SEALED WATERPROOF, FEMALE, 3 PRONG (APPROPRIATE FOR USE WITH STEEL ABRASIVES)
46	888-3031-30000PB	HEX NIPPLE 1/8" NPT x 1/8" W/BALL ST
47	888-3011-100PB	TEE, GALV 1/8"
48	888-4203-50200PB	SWIVEL 90°, 1/4" MNPT x 1/8" F
49	888-3000-102PB	ELBOW, GALV, 90°, 1/4"
50	888-3029-10209PB	NIPPLE, TBE, GALV, 1/4" x 2"
51	888-2229-301PB	VALVE, CONTROL, KNOB OPERATED 3W2P
	888-2229-30199PB	VALVE, CONTROL, KNOB OPERATED 3W2P, REPAIR KIT, HEAVY DUTY
52	PB-30A01003	PALM BUTTON, BLACK, FITS 888-2229-301PB CONTROL VALVE
53	888-4100-301PB	HOSE, TWINLINE CONTROL, ASSEMBLY, YEL/YEL W/BLACK STRIPE, NOMINAL 3/16" ID x 25'
54	888-4201-50000PB	STRAIGHT SWIVEL, 1/8" MNPT X 1/8" F

* See "***Valve Parts Lists***" Section for detailed parts list.

** See "***Control Handle Parts Lists***" Section for detailed parts list.

Copyright © 2022-2030 Pirate Brand®, All Rights Reserved

Pipe String Parts Lists

SHORT-CYCLE™ - Pneumatic Abrasive Cut-Off

REMOTE BLOW-DOWN W/ ON HOSE ABRASIVE CUT-OFF BUTTON OPTION

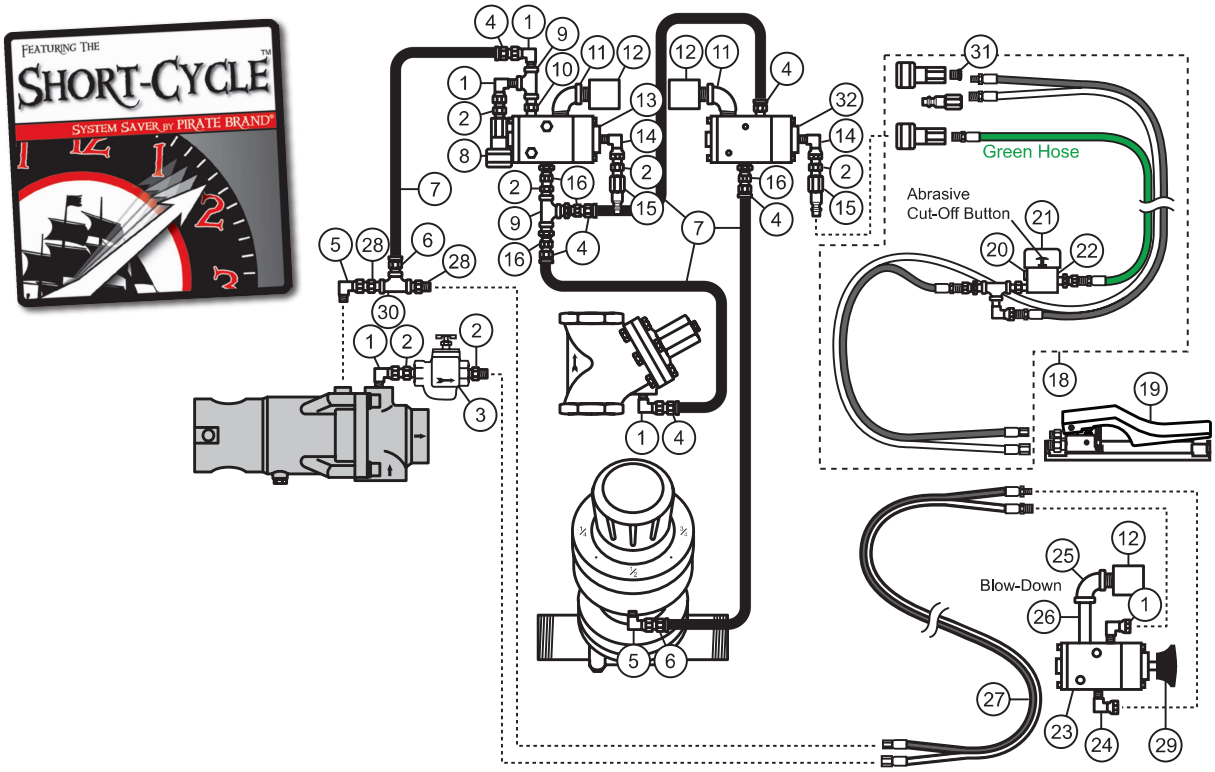

REMOTE BLOW-DOWN W/ REMOTE ABRASIVE CUT-OFF BUTTON OPTION

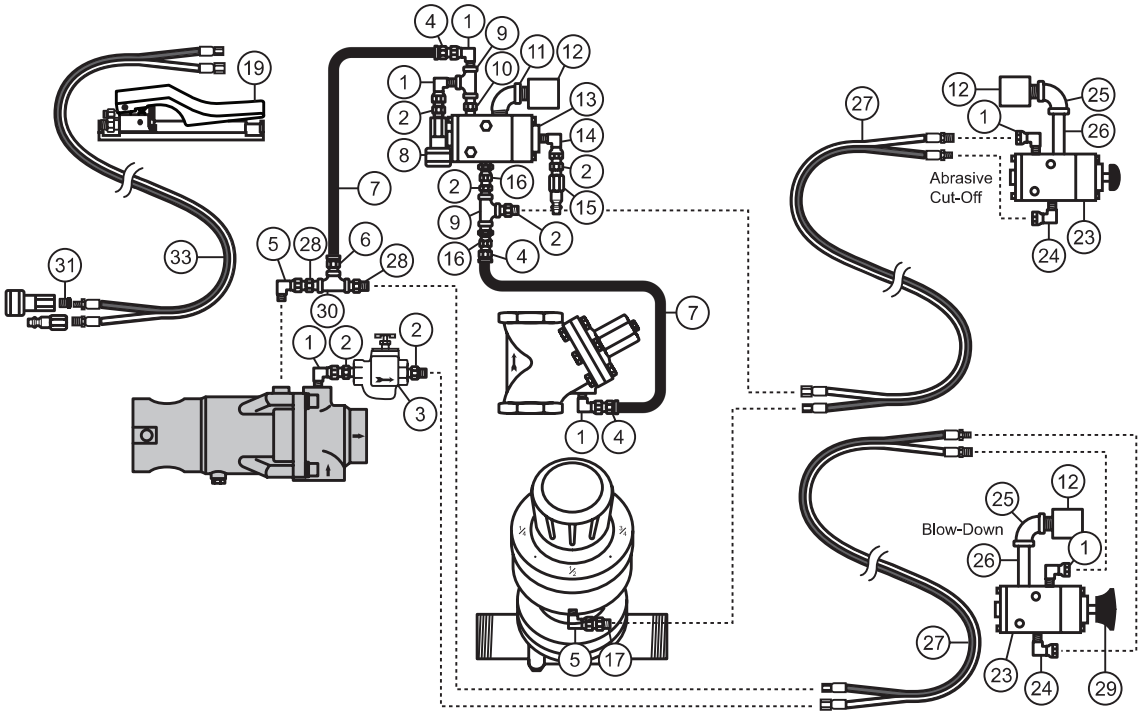

Copyright © 2022-2030 Pirate Brand®, All Rights Reserved

Pipe String Parts Lists

6.5 Cu Ft SHORT-CYCLE™ Abrasive Blasters - Pneumatic Abrasive Cut-Off - Parts List		
1	888-4203-50202PB	SWIVEL 90°, 1/4"MNPT x 1/4"F
2	888-3031-30202PB	HEX NIPPLE 1/4" NPT x 1/4" W/BALL ST
3	888-2301-90290PB	STRAINER, BRZ 1/4" 90 MICRON
4	888-4200-30202PB	HOSE, PUSH-ON INSERT 1/4" x 1/4" NPT
5	888-4203-50000PB	SWIVEL 90°, 1/8"MNPT X 1/8"F
6	888-4200-30200PB	HOSE, PUSH-ON INSERT 1/4" x 1/8" NPT
7	888-4101-002PB	HOSE, AIR, INSTA-GRIP, BLACK, NOMINAL 1/4" ID, 300 PSI
8	888-4224-30102PB	BRASS SOCKET, 1/4"
9	888-3011-102PB	TEE, GALV, 1/4"
10	888-3031-31202PB	NIPPLE, HEX 1/4" MNPT x 1/4" MNPT
11	888-3006-102PB	ELBOW, STREET, 90°, GALV, 1/4"
12	888-2013-402PB	DUST ELIMINATOR, 1/4" MNPT
13	888-2229-000PB	VALVE, CONTROL, PNEUMATIC (NORMALLY CLOSED)
	888-2229-00099PB	VALVE, CONTROL, PNEUMATIC, REPAIR KIT, HEAVY DUTY
14	888-4203-50002PB	SWIVEL 90°, 1/8" MNPT x 1/4" F
15	888-4224-30002PB	PLUG, 1/4"
16	888-4201-50202PB	STRAIGHT SWIVEL, 1/4"MNPT x 1/4"F
17	WH42-2	1/8" HOSE UNION
18	888-4100-50102PB	HOSE, TWINLINE ASSY 55' ACO W/ABRASIVE CUTOFF SWITCH
	888-4100-70102PB	HOSE, TWINLINE ASSY 110' ACO W/ABRASIVE CUTOFF SWITCH
19**	888-2263-000PB	HANDLE, CONTROL, PNEUMATIC (DEADMAN CONTROL HANDLE)
	888-2263-001PB	HANDLE, CONTROL, PNEUMATIC #2 (DEADMAN CONTROL HANDLE) **(STANDARD INCLUDED HANDLE)**
	888-2263-002PB	HANDLE, CONTROL, PNEUMATIC #3 (DEADMAN CONTROL HANDLE)
20	888-2014-300PB	VENT, 1/8"
21	888-2025-10001PB	TOGGLE SWITCH GUARD
22	888-2025-010PB	VALVE, ABRASIVE CUTOFF (PNEU)
23	888-2229-301PB	HANDLE, CONTROL, PNEUMATIC #2 (DEADMAN CONTROL HANDLE)
	888-2229-30199PB	VALVE, CONTROL, KNOB OPERATED 3W2P, REPAIR KIT, HEAVY DUTY
24	888-4203-50200PB	SWIVEL 90°, 1/4" MNPT x 1/8" F
25	888-3000-102PB	ELBOW, GALV, 90°, 1/4"
26	888-3029-10209PB	NIPPLE, TBE, GALV, 1/4" x 2"
27	888-4100-301PB	HOSE, TWINLINE CONTROL, ASSEMBLY, YEL/YEL W/BLACK STRIPE, NOMINAL 3/16" ID x 25'
28	888-3031-30000PB	HEX NIPPLE 1/8" NPT x 1/8" W/BALL ST
29	PB-30A01003	PALM BUTTON, BLACK, FITS 888-2229-301PB CONTROL VALVE
30	888-3011-100PB	TEE, GALV 1/8"
31	888-3026-50200PB	BUSHING, PLATED 1/4" x 1/8"NPT
32	888-2229-010PB	VALVE, CONTROL, PNEUMATIC (NORMALLY OPEN)
	888-2229-00099PB	VALVE, CONTROL, PNEUMATIC, REPAIR KIT, HEAVY DUTY
33	200-055	HOSE, TWINLINE CONTROL, ASSEMBLY, YEL/YEL W/BLACK STRIPE, NOMINAL 3/16" ID x 55'
	200-110	HOSE, TWINLINE CONTROL, ASSEMBLY, YEL/YEL W/BLACK STRIPE, NOMINAL 3/16" ID x 110'

** See "***Control Handle Parts Lists***" Section for detailed parts list.

Copyright © 2022-2030 Pirate Brand®, All Rights Reserved

Pipe String Parts Lists

SHORT-CYCLE™ - Electric Abrasive Cut-Off

REMOTE BLOW-DOWN W/ ON CORD ABRASIVE CUT-OFF SWITCH OPTION

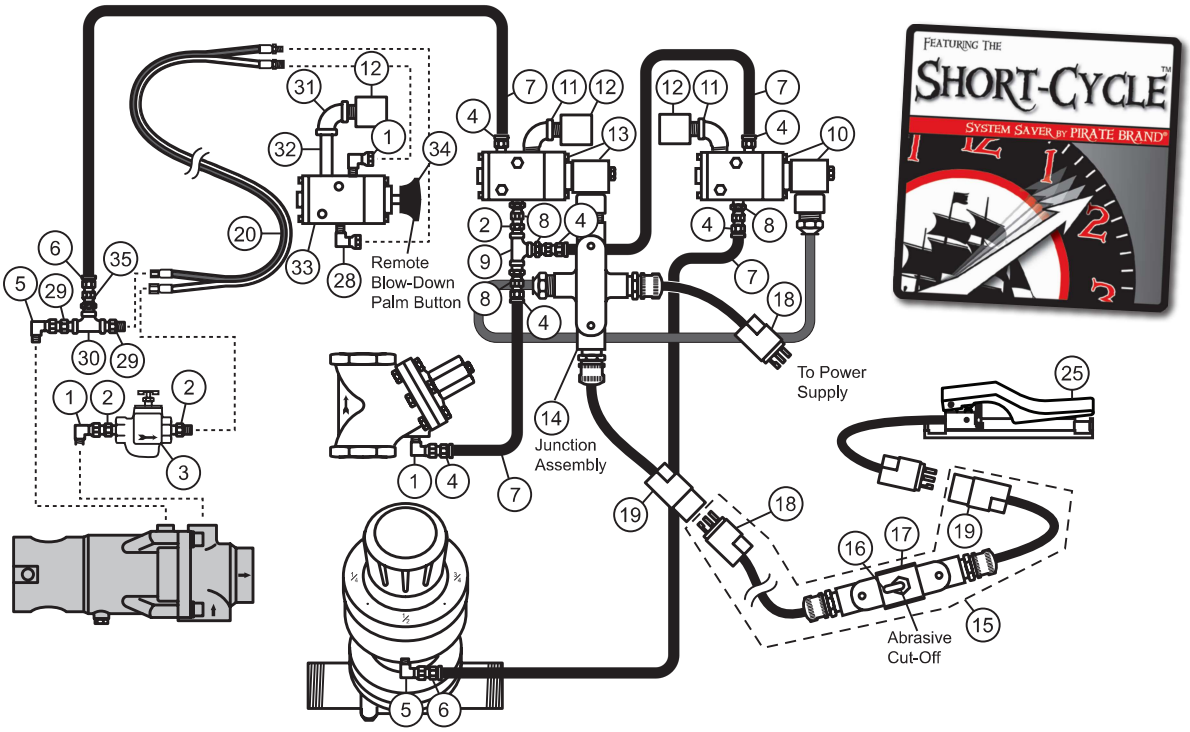

REMOTE BLOW-DOWN W/ REMOTE ABRASIVE CUT-OFF SWITCH OPTION

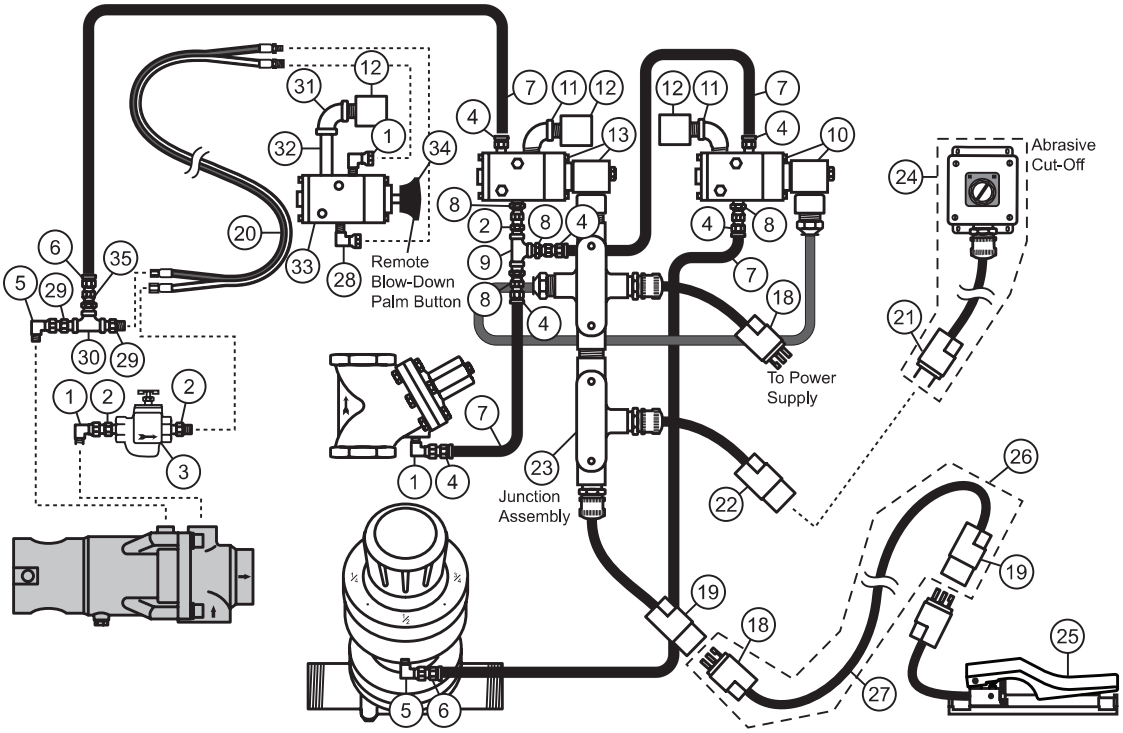

Copyright © 2022-2030 Pirate Brand®, All Rights Reserved

Pipe String Parts Lists

6.5 Cu Ft SHORT-CYCLE™ Abrasive Blasters - Electric Abrasive Cut-Off - Parts List

1	888-4203-50202PB	SWIVEL 90°, 1/4"MNPT x 1/4"F
2	888-3031-30202PB	HEX NIPPLE 1/4" NPT x 1/4" W/BALL ST
3	888-2301-90290PB	STRAINER, BRZ 1/4" 90 MICRON
4	888-4200-30202PB	HOSE, PUSH-ON INSERT 1/4" x 1/4" NPT
5	888-4203-50000PB	SWIVEL 90°, 1/8"MNPT X 1/8"F
6	888-4200-30200PB	HOSE, PUSH-ON INSERT 1/4" x 1/8" NPT
7	888-4101-002PB	HOSE, AIR, INSTA-GRIP, BLACK, NOMINAL 1/4" ID, 300 PSI
8	888-4201-50202PB	STRAIGHT SWIVEL, 1/4"MNPT x 1/4"F
9	888-3011-102PB	TEE, GALV, 1/4"
10	888-2229-600PB	VALVE, CONTROL, ELECTRIC, 12VDC (NORMALLY OPEN)
	888-2229-10099PB	VALVE, CONTROL, REPAIR KIT, ELECTRIC, HEAVY DUTY
11	888-3006-102PB	ELBOW, STREET, 90°, GALV, 1/4"
12	888-2013-402PB	DUST ELIMINATOR, 1/4" MNPT
13	888-2229-100PB	VALVE, CONTROL, ELECTRIC, 12VDC (NORMALLY CLOSED)
	888-2229-10099PB	VALVE, CONTROL, REPAIR KIT, ELECTRIC, HEAVY DUTY
14	888-7112-00002PB	JUNCTION CROSS ASSEMBLY, SMALL & BULK BLASTERS, 12VDC, ACO ON CORD W/ TWIST-LOCK CONNECTORS, (1) OUTLET
	888-7112-00002PB-01	JUNCTION CROSS ASSEMBLY, SMALL & BULK BLASTERS, 12VDC, ACO ON CORD W/ SEALED WATERPROOF CONNECTORS, (1) OUTLET
15	888-7075-055PB	CORD W/TWIST-LOCK CONNECTORS & ABRASIVE CUTOFF SWITCH ASSEMBLY, 55', 3-PRONG, 3-WIRE, X-TREME DUTY™ URETHANE CONTROL CORD
	888-7075-110PB	CORD W/TWIST-LOCK CONNECTORS & ABRASIVE CUTOFF SWITCH ASSEMBLY, 110', 3-PRONG, 3-WIRE, X-TREME DUTY™ URETHANE CONTROL CORD
	888-7075-05501PB	CORD W/SEALED WATERPROOF CONNECTORS & ABRASIVE CUTOFF SWITCH ASSEMBLY, 55', 3 PRONG, 3 WIRE, X-TREME DUTY™ URETHANE CONTROL CORD
	888-7075-11001PB	CORD W/SEALED WATERPROOF CONNECTORS & ABRASIVE CUTOFF SWITCH ASSEMBLY, 110', 3 PRONG, 3 WIRE, X-TREME DUTY™ URETHANE CONTROL CORD
16	888-2025-10002PB	ABRA CUTOFF SWITCH (ELEC)
17	888-2025-10001PB	TOGGLE SWITCH GUARD
18	888-7109-301PB	ELECTRIC CONNECTOR, MALE, TWIST-LOCK, 3 PRONG
	888-7109-30102PB	ELECTRIC CONNECTOR, SEALED WATERPROOF, MALE, 3 PRONG (APPROPRIATE FOR USE WITH STEEL ABRASIVES)
19	888-7109-300PB	ELECTRIC CONNECTOR, FEMALE, TWIST-LOCK, 3 PRONG
	888-7109-30002PB	ELECTRIC CONNECTOR, SEALED WATERPROOF, FEMALE, 3 PRONG (APPROPRIATE FOR USE WITH STEEL ABRASIVES)
20	888-4100-301PB	HOSE, TWINLINE CONTROL, ASSEMBLY, YEL/YEL W/BLACK STRIPE, NOMINAL 3/16" ID x 25'
21	10-354	MALE TWIST-LOCK CONNECTOR, 2 PRONG
	888-7109-20102PB	ELECTRIC CONNECTOR, SEALED WATERPROOF, MALE, 2 PRONG (APPROPRIATE FOR USE WITH STEEL ABRASIVES)
22	10-352	FEMALE TWIST-LOCK CONNECTOR, 2 PRONG
	888-7109-20002PB	ELECTRIC CONNECTOR, SEALED WATERPROOF, FEMALE, 2 PRONG (APPROPRIATE FOR USE WITH STEEL ABRASIVES)
23	888-7112-00004PB	JUNCTION CROSS/TEE ASSEMBLY, SMALL & BULK BLASTERS, 12VDC, SSACO W/ TWIST-LOCK CONNECTORS, (1) OUTLET
	888-7112-00004PB-01	JUNCTION CROSS/TEE ASSEMBLY, SMALL & BULK BLASTERS, 12VDC, SSACO W/ SEALED WATERPROOF CONNECTORS, (1) OUTLET
24	999-8400-35104PB-02	SELECTOR SWITCH OPERATOR W/ TWIST-LOCK CONNECTOR, 25' CORD, 2 PRONG, X-TREME DUTY™ URETHANE CONTROL CORD
	999-8400-35104PB-04	SELECTOR SWITCH OPERATOR W/SEALED WATERPROOF CONNECTOR, 25' CORD, 2 PRONG, X-TREME DUTY™ URETHANE CONTROL CORD
25**	888-2263-40001PB	HANDLE, CONTROL, ELECTRIC w/TWIST-LOCK PLUG **(NOT FOR USE WITH STEEL ABRASIVES)**
	888-2263-40101PB	HANDLE, CONTROL, ELECTRIC #2 w/TWIST-LOCK PLUG **(NOT FOR USE WITH STEEL ABRASIVES)** **(STANDARD INCLUDED NON-SEALED CONNECTOR HANDLE)**
	888-2263-40102PB	HANDLE, CONTROL, ELECTRIC #2 w/3 PART SEALED STRAIN RELIEF **(APPROPRIATE FOR USE WITH STEEL ABRASIVES)**
	888-2263-40104PB	HANDLE, CONTROL, ELECTRIC #2 w/**SEALED WATERPROOF CONNECTOR** **(APPROPRIATE FOR USE WITH STEEL ABRASIVES)**
26	888-7073-055PB	EXTN CORD W/TWIST-LOCK CONNECTORS, 55', 3 PRONG, 2 WIRE, X-TREME DUTY™ URETHANE CONTROL CORD
	888-7073-110PB	EXTN CORD W/TWIST-LOCK CONNECTORS, 110', 3 PRONG, 2 WIRE, X-TREME DUTY™ URETHANE CONTROL CORD
	888-7074-05501PB	EXTN CORD W/SEALED WATERPROOF CONNECTORS, 55', 3 PRONG, 3 WIRE, X-TREME DUTY™ URETHANE CONTROL CORD
	888-7074-11001PB	EXTN CORD W/SEALED WATERPROOF CONNECTORS, 110', 3 PRONG, 3 WIRE, X-TREME DUTY™ URETHANE CONTROL CORD
27	888-7106-183PB	CONTROL CORD, X-TREME DUTY™, URETHANE JACKET, 18AWG, 3 WIRE
28	888-4203-50200PB	SWIVEL 90°, 1/4" MNPT x 1/8" F
29	888-3031-30000PB	HEX NIPPLE 1/8" NPT x 1/8" W/BALL ST
30	888-3011-100PB	TEE, GALV 1/8"
31	888-3000-102PB	ELBOW, GALV, 90°, 1/4"
32	888-3029-10209PB	NIPPLE, TBE, GALV, 1/4" x 2"
33	888-2229-301PB	VALVE, CONTROL, KNOB OPERATED 3W2P
	888-2229-30199PB	VALVE, CONTROL, KNOB OPERATED 3W2P, REPAIR KIT, HEAVY DUTY
34	PB-30A01003	PALM BUTTON, BLACK, FITS 888-2229-301PB CONTROL VALVE
35	888-4201-50000PB	STRAIGHT SWIVEL, 1/8" MNPT X 1/8" F

** See "***Control Handle Parts Lists***" Section for detailed parts list.

Copyright © 2022-2030 Pirate Brand®, All Rights Reserved

Pipe String Parts Lists

SPH SERIES - Pneumatic Controls

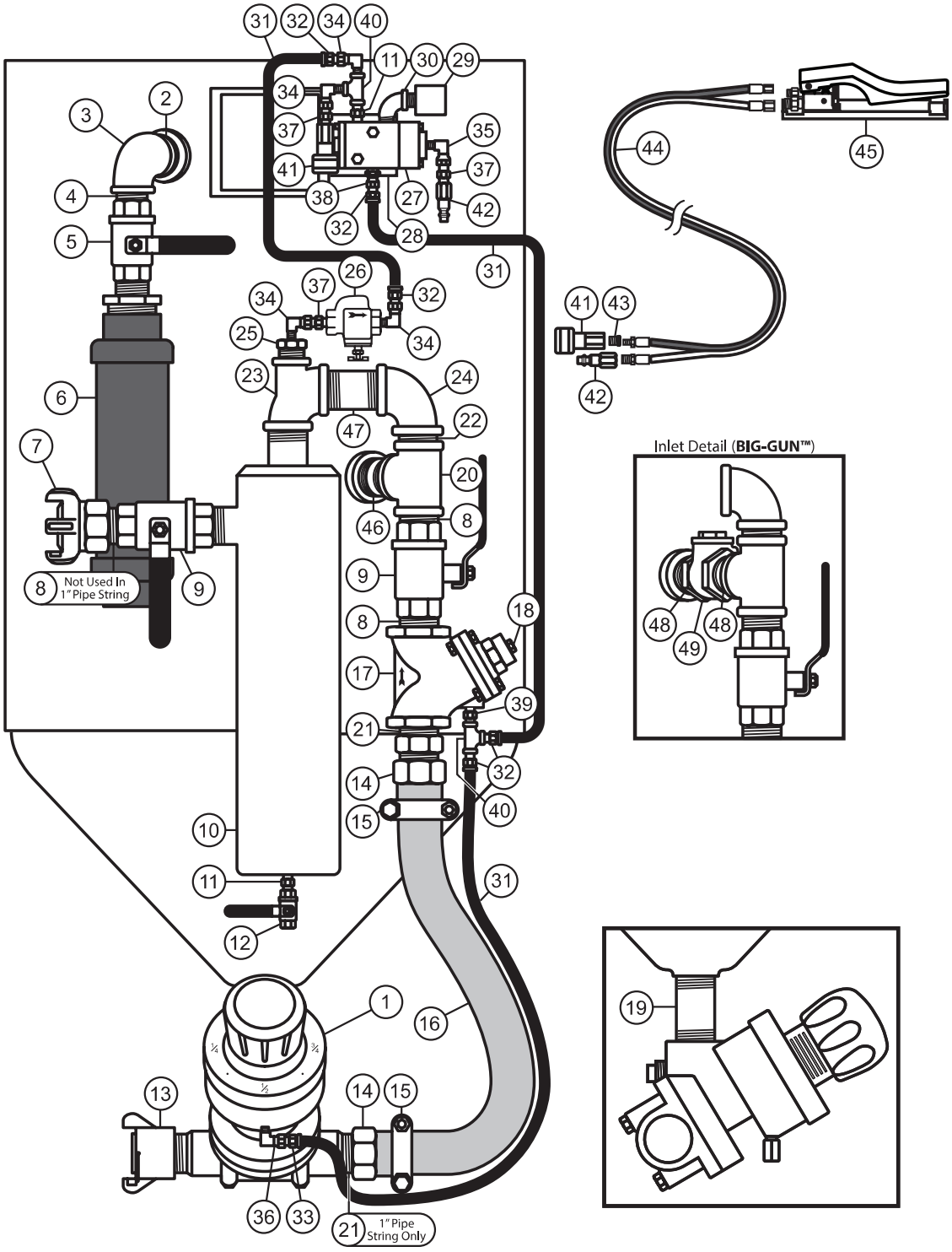

Copyright © 2022-2030 Pirate Brand®, All Rights Reserved

Pipe String Parts Lists

3.5/6.5 Cu Ft SPH Abrasive Blasters - Pneumatic Controls - Parts List

	1" PIPE STRING		1-1/4" PIPE STRING		1-1/2" BIG-GUN™ PIPE STRING	
1*	888-2149-106PB	APV, 1", W/ URETHANE SLEEVE	888-2149-107PB	APV, 1-1/4", W/ URETHANE SLEEVE	888-2149-108PB	APV, 1-1/2", W/ URETHANE SLEEVE
	888-2149-006PB	APV, 1", W/ TUNGSTEN CARBIDE SLEEVE	888-2149-007PB	APV, 1-1/4", W/ TUNGSTEN CARBIDE SLEEVE	888-2149-008PB	APV, 1-1/2", W/ TUNGSTEN CARBIDE SLEEVE
	888-2148-006PB	APV II, 1" W/ SOLID TUNGSTEN CARBIDE SLEEVE	888-2148-007PB	APV II, 1-1/4" W/ SOLID TUNGSTEN CARBIDE SLEEVE	888-2148-008PB	APV II, 1-1/2" W/ SOLID TUNGSTEN CARBIDE SLEEVE
2	888-3029-10711PB	NIPPLE, TBE, GALV, 1-1/4" x 3"				
3	888-3010-10706PB	ELBOW, REDUCING, GALV, 1-1/4" x 1"				
4	888-3029-10699PB	NIPPLE, TBE, GALV, 1" x CLOSED				
5	VB100	BALL VALVE, FULL PORT, 1" NPT				
6	888-2011-006PB	MUFFLER, BLOWDOWN, 1" MNPT				
7	UM-100	AIR HOSE COUPLING, 2 LUG, 1" MALE NPT	UF-125	AIR HOSE COUPLINGS, 4 LUG, 1-1/4" FEMALE NPT	UF-150	AIR HOSE COUPLINGS, 4 LUG, 1-1/2" FEMALE NPT
8	888-3029-10699PB	NIPPLE, TBE, GALV, 1" x CLOSED	888-3029-10799PB	NIPPLE, TBE, GALV, 1-1/4" x CLOSED	888-3029-10899PB	NIPPLE, TBE, GALV, 1-1/2" x CLOSED
9	VB100	BALL VALVE, FULL PORT, 1" NPT	VB125	BALL VALVE, FULL PORT, 1-1/4" NPT	VB150	BALL VALVE, FULL PORT, 1-1/2" NPT
10	888-1200-006PB	MOISTURE TRAP 1"	888-1200-007PB	MOISTURE TRAP 1-1/4"	888-1200-010PB	MOISTURE TRAP 1-1/2", **BIG-GUN™**
11	888-3031-31202PB	NIPPLE, HEX 1/4" MNPT x 1/4" MNPT				
12	VB025	BALL VALVE, FULL PORT, 1/4" NPT				
13	SB-2-IR	THD QUICK COUPLING, IRON, 1-1/2"	SB-1S-IR	THD CPLG, STD NPS, IRON, 1-1/4"	SB-3X-AL	THD QUICK COUPLING, ALUMINUM, 1-1/2", FULL PORT
14	888-4205-106PB	HOSE, INSERT SWIVEL, 1", INCLUDES GASKET	888-4205-107PB	HOSE, INSERT SWIVEL, 1-1/4", INCLUDES GASKET	888-4205-108PB	HOSE, INSERT SWIVEL, 1-1/2", INCLUDES GASKET
	888-4205-10699PB	HOSE, SWIVEL GASKET, 1"	888-4205-10799PB	HOSE, SWIVEL GASKET, 1-1/4"	888-4205-10899PB	HOSE, SWIVEL GASKET, 1-1/2"
15	888-4235-006PB	HOSE, CLAMP, DOUBLE BOLT, 1"	888-4235-007PB	HOSE, CLAMP, DOUBLE BOLT, 1-1/4"	888-4235-008PB	HOSE, CLAMP, DOUBLE BOLT, 1-1/2"
16	112-0100	HOSE, AIR, RED, NOMINAL 1" ID x 1-1/2" OD, WP 300 PSI	112-0114	HOSE, AIR, RED, NOMINAL 1-1/4" ID x 1-51/64" OD, WP 250 PSI	112-0112	HOSE, AIR, RED, NOMINAL 1-1/2" ID x 2-3/32" OD, WP 250 PSI
17*	888-2123-106PB	VALVE, AUTO AIR, 1", (NORMALLY CLOSED)	888-2123-107PB	VALVE, AUTO AIR, 1-1/4", (NORMALLY CLOSED)	888-2123-108PB-L	VALVE, AUTO AIR, 1-1/2" FULL FLOW, (NORMALLY CLOSED)
18	888-2014-300PB	VENT, 1/8"				
19	888-3028-10711PB	NIPPLE, TBE, SCHEDULE 80, GALV, 1-1/4" x 3"				
20	888-3013-10706PB	TEE, GALV, 1-1/4" x 1" x 1-1/4"	888-3011-107PB	TEE, GALV, 1-1/4"	888-3038-10807PB	TEE REDUCING, GALV, 1-1/2" x 1-1/2" x 1-1/4"
21	888-3031-30606PB	HEX NIPPLE, 1" x 1"	888-3031-30707PB	HEX NIPPLE, 1-1/4" x 1-1/4"	888-3031-30808PB	HEX NIPPLE, 1-1/2" x 1-1/2"
22	888-3029-10799PB	NIPPLE, TBE, GALV, 1-1/4" x CLOSED			888-3029-10899PB	NIPPLE, TBE, GALV, 1-1/2" x CLOSED
23	888-3013-10705PB	TEE, GALV, 90°, 1-1/4" x 3/4" x 1-1/4"			888-3013-10805PB	TEE, GALV, 90°, 1-1/2" x 3/4" x 1-1/2"
24	888-3000-107PB	ELBOW, GALV, 90°, 1-1/4"			888-3000-108PB	ELBOW, GALV, 90°, 1-1/2"
25	888-3026-10502PB	BUSHING, GALV, 3/4" x 1/4"				
26	888-2301-90290PB	STRAINER, BRZ 1/4" 90 MICRON				
27	888-2229-000PB	VALVE, CONTROL, PNEUMATIC (NORMALLY CLOSED)				
	888-2229-00099PB	VALVE, CONTROL, PNEUMATIC, REPAIR KIT, HEAVY DUTY				
28	888-7033-002PB	BRACKET, CONTROL VALVE				
29	888-2013-402PB	DUST ELIMINATOR, 1/4" MNPT				
30	888-3006-102PB	ELBOW, STREET, 90°, GALV, 1/4"				
31	888-4101-002PB	HOSE, AIR, INSTA-GRIP, BLACK, NOMINAL 1/4" ID, 300 PSI				
32	888-4200-30202PB	HOSE, PUSH-ON INSERT 1/4" x 1/4" NPT				
33	888-4200-30200PB	HOSE, PUSH-ON INSERT 1/4" x 1/8" NPT				
34	888-4203-50202PB	SWIVEL 90°, 1/4"MNPT x 1/4"F				
35	888-4203-50002PB	SWIVEL 90°, 1/8" MNPT x 1/4" F				
36	888-4203-50000PB	SWIVEL 90°, 1/8"MNPT X 1/8"F				
37	888-3031-30202PB	HEX NIPPLE 1/4" NPT x 1/4" W/BALL ST				
38	888-4201-50202PB	STRAIGHT SWIVEL, 1/4"MNPT x 1/4"F				
39	888-3031-31200PB	NIPPLE, HEX, 1/4" MNPT x 1/8" MNPT			888-3031-31202PB	NIPPLE, HEX 1/4" MNPT x 1/4" MNPT
40	888-3011-102PB	TEE, GALV, 1/4"				
41	888-4224-30102PB	BRASS SOCKET, 1/4"				
42	888-4224-30002PB	PLUG, 1/4"				
43	888-3026-50200PB	BUSHING, PLATED 1/4" x 1/8"NPT				
44	200-055	HOSE, TWINLINE CONTROL, ASSEMBLY, YEL/YEL W/BLACK STRIPE, NOMINAL 3/16" ID x 55'				
	200-110	HOSE, TWINLINE CONTROL, ASSEMBLY, YEL/YEL W/BLACK STRIPE, NOMINAL 3/16" ID x 110'				
45**	888-2263-000PB	HANDLE, CONTROL, PNEUMATIC (DEADMAN CONTROL HANDLE)				
	888-2263-001PB	HANDLE, CONTROL, PNEUMATIC #2 (DEADMAN CONTROL HANDLE) **(STANDARD INCLUDED HANDLE)**				
	888-2263-002PB	HANDLE, CONTROL, PNEUMATIC #3 (DEADMAN CONTROL HANDLE)				
46	888-3028-10711PB	NIPPLE, TBE, SCHEDULE 80, GALV, 1-1/4" x 3"			NOT USED	
47	888-3029-10711PB	NIPPLE, TBE, GALV, 1-1/4" x 3"			888-3029-10814PB	NIPPLE, TBE, GALV, 1-1/2" x 4"
48	NOT USED				888-3028-10799PB	NIPPLE, TBE, SCHEDULE 80, GALV, 1-1/4" x CLOSED
49	NOT USED				888-2490-90701PB	CHECK VALVE, SWING 1-1/4", W/ 5/32" DIFFERENTIAL EQUALIZER HOLE

* See "***Valve Parts Lists***" Section for detailed parts list.
** See "***Control Handle Parts Lists***" Section for detailed parts list.

Copyright © 2022-2030 Pirate Brand®, All Rights Reserved

Pipe String Parts Lists

SPH SERIES - Electric Controls

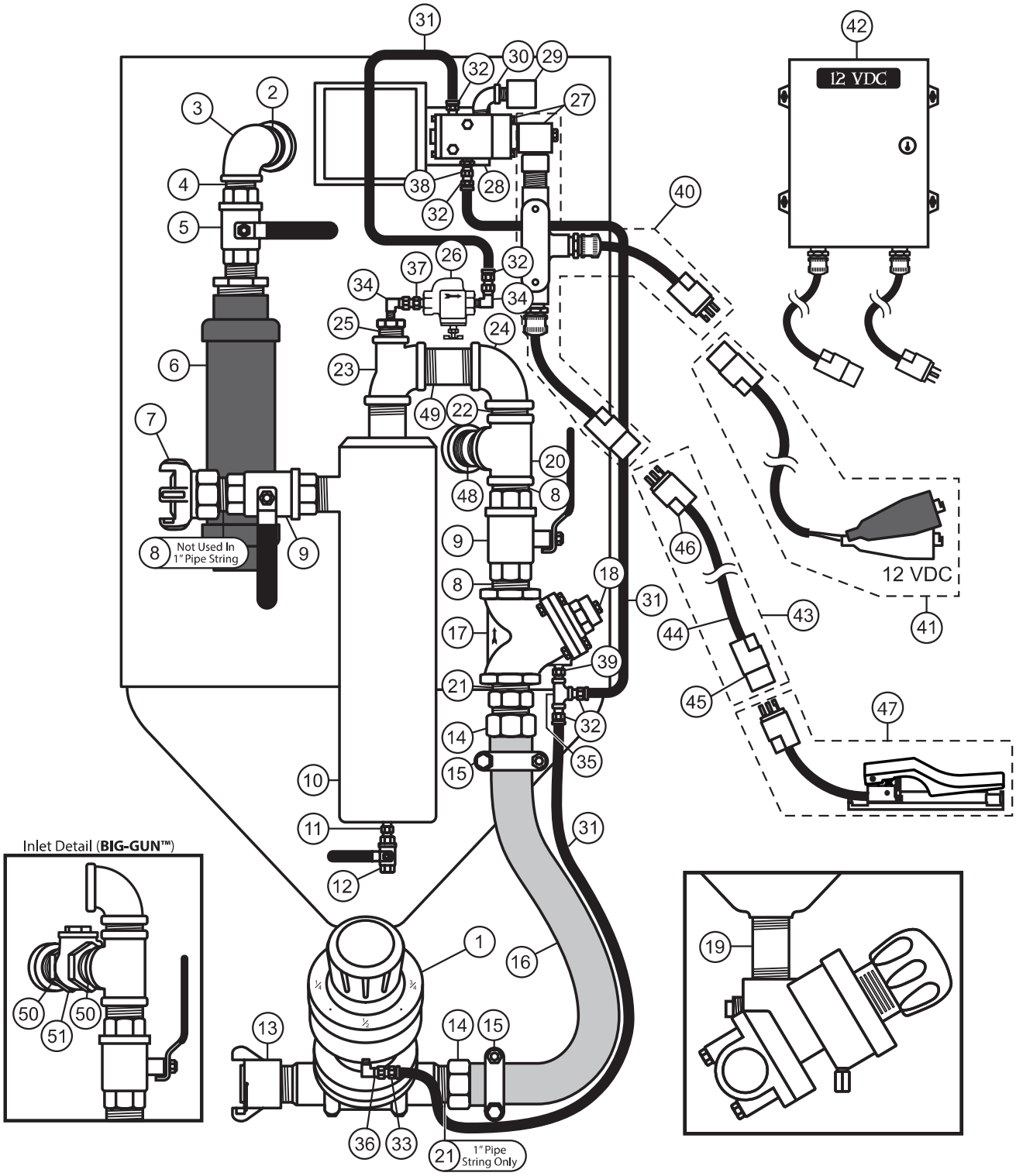

Copyright © 2022-2030 Pirate Brand®, All Rights Reserved

Pipe String Parts Lists

3.5/6.5 Cu Ft SPH Abrasive Blasters - Electric Controls - Parts List

	1" PIPE STRING		1-1/4" PIPE STRING		1-1/2" BIG-GUN™ PIPE STRING	
1*	888-2149-106PB	APV, 1", W/ URETHANE SLEEVE	888-2149-107PB	APV, 1-1/4", W/ URETHANE SLEEVE	888-2149-108PB	APV, 1-1/2", W/ URETHANE SLEEVE
	888-2149-006PB	APV, 1", W/ TUNGSTEN CARBIDE SLEEVE	888-2149-007PB	APV, 1-1/4", W/ TUNGSTEN CARBIDE SLEEVE	888-2149-008PB	APV, 1-1/2", W/ TUNGSTEN CARBIDE SLEEVE
	888-2148-006PB	APV II, 1" W/ SOLID TUNGSTEN CARBIDE SLEEVE	888-2148-007PB	APV II, 1-1/4" W/ SOLID TUNGSTEN CARBIDE SLEEVE	888-2148-008PB	APV II, 1-1/2" W/ SOLID TUNGSTEN CARBIDE SLEEVE
2	888-3029-10711PB	NIPPLE, TBE, GALV, 1-1/4" x 3"				
3	888-3010-10706PB	ELBOW, REDUCING, GALV, 1-1/4" x 1"				
4	888-3029-10699PB	NIPPLE, TBE, GALV, 1" x CLOSED				
5	VB100	BALL VALVE, FULL PORT, 1" NPT				
6	888-2011-006PB	MUFFLER, BLOWDOWN, 1" MNPT				
7	UM-100	AIR HOSE COUPLING, 2 LUG, 1" MALE NPT	UF-125	AIR HOSE COUPLINGS, 4 LUG, 1-1/4" FEMALE NPT	UF-150	AIR HOSE COUPLINGS, 4 LUG, 1-1/2" FEMALE NPT
8	888-3029-10699PB	NIPPLE, TBE, GALV, 1" x CLOSED	888-3029-10799PB	NIPPLE, TBE, GALV, 1-1/4" x CLOSED	888-3029-10899PB	NIPPLE, TBE, GALV, 1-1/2" x CLOSED
9	VB100	BALL VALVE, FULL PORT, 1" NPT	VB125	BALL VALVE, FULL PORT, 1-1/4" NPT	VB150	BALL VALVE, FULL PORT, 1-1/2" NPT
10	888-1200-006PB	MOISTURE TRAP 1"	888-1200-007PB	MOISTURE TRAP 1-1/4"	888-1200-010PB	MOISTURE TRAP 1-1/2", **BIG-GUN™**
11	888-3031-31202PB	NIPPLE, HEX 1/4" MNPT x 1/4" MNPT				
12	VB025	BALL VALVE, FULL PORT, 1/4" NPT				
13	SB-2-IR	THD QUICK COUPLING, IRON, 1-1/2"	SB-1S-IR	THD CPLG, STD NPS, IRON, 1-1/4"	SB-3X-AL	THD QUICK COUPLING, ALUMINUM, 1-1/2", FULL PORT
14	888-4205-106PB	HOSE, INSERT SWIVEL, 1", INCLUDES GASKET	888-4205-107PB	HOSE, INSERT SWIVEL, 1-1/4", INCLUDES GASKET	888-4205-108PB	HOSE, INSERT SWIVEL, 1-1/2", INCLUDES GASKET
	888-4205-10699PB	HOSE, SWIVEL GASKET, 1"	888-4205-10799PB	HOSE, SWIVEL GASKET, 1-1/4"	888-4205-10899PB	HOSE, SWIVEL GASKET, 1-1/2"
15	888-4235-006PB	HOSE, CLAMP, DOUBLE BOLT, 1"	888-4235-007PB	HOSE, CLAMP, DOUBLE BOLT, 1-1/4"	888-4235-008PB	HOSE, CLAMP, DOUBLE BOLT, 1-1/2"
16	112-0100	HOSE, AIR, RED, NOMINAL 1" ID x 1-1/2" OD, WP 300 PSI	112-0114	HOSE, AIR, RED, NOMINAL 1-1/4" ID x 1-51/64" OD, WP 250 PSI	112-0112	HOSE, AIR, RED, NOMINAL 1-1/2" ID x 2-3/32" OD, WP 250 PSI
17*	888-2123-106PB	VALVE, AUTO AIR, 1", (NORMALLY CLOSED)	888-2123-107PB	VALVE, AUTO AIR, 1-1/4", (NORMALLY CLOSED)	888-2123-108PB-L	VALVE, AUTO AIR, 1-1/2" FULL FLOW, (NORMALLY CLOSED)
18	888-2014-300PB	VENT, 1/8"				
19	888-3028-10711PB	NIPPLE, TBE, SCHEDULE 80, GALV, 1-1/4" x 3"				
20	888-3013-10706PB	TEE, GALV, 1-1/4" x 1" x 1-1/4"	888-3011-107PB	TEE, GALV, 1-1/4"	888-3038-10807PB	TEE REDUCING, GALV, 1-1/2" x 1-1/2" x 1-1/4"
21	888-3031-30606PB	HEX NIPPLE, 1" x 1"	888-3031-30707PB	HEX NIPPLE, 1-1/4" x 1-1/4"	888-3031-30808PB	HEX NIPPLE, 1-1/2" x 1-1/2"
22	888-3029-10799PB	NIPPLE, TBE, GALV, 1-1/4" x CLOSED			888-3029-10899PB	NIPPLE, TBE, GALV, 1-1/2" x CLOSED
23	888-3013-10705PB	TEE, GALV, 90°, 1-1/4" x 3/4" x 1-1/4"			888-3013-10805PB	TEE, GALV, 90°, 1-1/2" x 3/4" x 1-1/2"
24	888-3000-107PB	ELBOW, GALV, 90°, 1-1/4"			888-3000-108PB	ELBOW, GALV, 90°, 1-1/2"
25	888-3026-10502PB	BUSHING, GALV, 3/4" x 1/4"				
26	888-2301-90290PB	STRAINER, BRZ 1/4" 90 MICRON				
27	888-2229-100PB	VALVE, CONTROL, ELECTRIC, 12VDC (NORMALLY CLOSED)				
	888-2229-10099PB	VALVE, CONTROL, REPAIR KIT, ELECTRIC, HEAVY DUTY				
28	888-7033-002PB	BRACKET, CONTROL VALVE				
29	888-2013-402PB	DUST ELIMINATOR, 1/4" MNPT				
30	888-3006-102PB	ELBOW, STREET, 90°, GALV, 1/4"				
31	888-4101-002PB	HOSE, AIR, INSTA-GRIP, BLACK, NOMINAL 1/4" ID, 300 PSI				
32	888-4200-30202PB	HOSE, PUSH-ON INSERT 1/4" x 1/4" NPT				
33	888-4200-30200PB	HOSE, PUSH-ON INSERT 1/4" x 1/8" NPT				
34	888-4203-50202PB	SWIVEL 90°, 1/4" MNPT x 1/4"F				
35	888-3011-102PB	TEE, GALV, 1/4"				
36	888-4203-50000PB	SWIVEL 90°, 1/8" MNPT X 1/8"F				
37	888-3031-30202PB	HEX NIPPLE 1/4" NPT x 1/4" W/BALL ST				
38	888-4201-50202PB	STRAIGHT SWIVEL, 1/4" MNPT x 1/4"F				
39	888-3031-31200PB	NIPPLE, HEX, 1/4" MNPT x 1/8" MNPT			888-3031-31202PB	NIPPLE, HEX 1/4" MNPT x 1/4" MNPT
40	888-7112-000PB	JUNCTION TEE ASSEMBLY, SMALL & BULK BLASTERS, 12VDC W/ TWIST-LOCK CONNECTORS, (1) OUTLET				
	888-7112-000PB-01	JUNCTION TEE ASSEMBLY, SMALL & BULK BLASTERS, 12VDC W/ SEALED WATERPROOF CONNECTORS, (1) OUTLET				
41	888-7072-012PB	POWER CORD, 25' 12VDC, 3-LUG, X-TREME DUTY™ URETHANE CORD				
	888-7072-01201PB	POWER CORD W/SEALED WATERPROOF CONNECTOR, 25' 12VDC, 3 PRONG, X-TREME DUTY™ URETHANE CORD				
42	PB-SMP3WP	POWER SUPPLY 120AC INPUT/12VDC @ 2.5 AMP OUTPUT, 4 CONTROL VALVE MAX LOAD, 3 PRONG CONNECTOR, X-TREME DUTY™ URETHANE CORD				
43	888-7073-055PB	EXTN CORD W/TWIST-LOCK CONNECTORS, 55', 3 PRONG, 2 WIRE, X-TREME DUTY™ URETHANE CONTROL CORD				
	888-7073-110PB	EXTN CORD W/TWIST-LOCK CONNECTORS, 110', 3 PRONG, 2 WIRE, X-TREME DUTY™ URETHANE CONTROL CORD				
	888-7074-05501PB	EXTN CORD W/SEALED WATERPROOF CONNECTORS, 55', 3 PRONG, 3 WIRE, X-TREME DUTY™ URETHANE CONTROL CORD				
	888-7074-11001PB	EXTN CORD W/SEALED WATERPROOF CONNECTORS, 110', 3 PRONG, 3 WIRE, X-TREME DUTY™ URETHANE CONTROL CORD				
44	888-7106-183PB	CONTROL CORD, X-TREME DUTY™, URETHANE JACKET, 18AWG, 3 WIRE				
45	888-7109-300PB	ELECTRIC CONNECTOR, FEMALE, TWIST-LOCK, 3 PRONG				
	888-7109-30002PB	ELECTRIC CONNECTOR, SEALED WATERPROOF, FEMALE, 3 PRONG (APPROPRIATE FOR USE WITH STEEL ABRASIVES)				
46	888-7109-301PB	ELECTRIC CONNECTOR, MALE, TWIST-LOCK, 3 PRONG				
	888-7109-30102PB	ELECTRIC CONNECTOR, SEALED WATERPROOF, MALE, 3 PRONG (APPROPRIATE FOR USE WITH STEEL ABRASIVES)				
47**	888-2263-40001PB	HANDLE, CONTROL, ELECTRIC w/TWIST-LOCK PLUG **(NOT FOR USE WITH STEEL ABRASIVES)**				
	888-2263-40101PB	HANDLE, CONTROL, ELECTRIC #2 w/TWIST-LOCK PLUG **(NOT FOR USE WITH STEEL ABRASIVES) (STANDARD INCLUDED NON-SEALED CONNECTOR HANDLE)**				
	888-2263-40102PB	HANDLE, CONTROL, ELECTRIC #2 w/3 PART SEALED STRAIN RELIEF **(APPROPRIATE FOR USE WITH STEEL ABRASIVES)**				
	888-2263-40104PB	HANDLE, CONTROL, ELECTRIC #2 w/**SEALED WATERPROOF CONNECTOR (APPROPRIATE FOR USE WITH STEEL ABRASIVES)**				
48	888-3028-10711PB	NIPPLE, TBE, SCHEDULE 80, GALV, 1-1/4" x 3"			NOT USED	
49	888-3029-10711PB	NIPPLE, TBE, GALV, 1-1/4" x 3"			888-3029-10814PB	NIPPLE, TBE, GALV, 1-1/2" x 4"
50	NOT USED				888-3028-10799PB	NIPPLE, TBE, SCHEDULE 80, GALV, 1-1/4" x CLOSED
51	NOT USED				888-2490-90701PB	CHECK VALVE, SWING 1-1/4", W/ 5/32" DIFFERENTIAL EQUALIZER HOLE

* See "***Valve Parts Lists***" Section for detailed parts list.
** See "***Control Handle Parts Lists***" Section for detailed parts list.

Copyright © 2022-2030 Pirate Brand®, All Rights Reserved

Pipe String Parts Lists

SPH SERIES - Pneumatic Abrasive Cut-Off

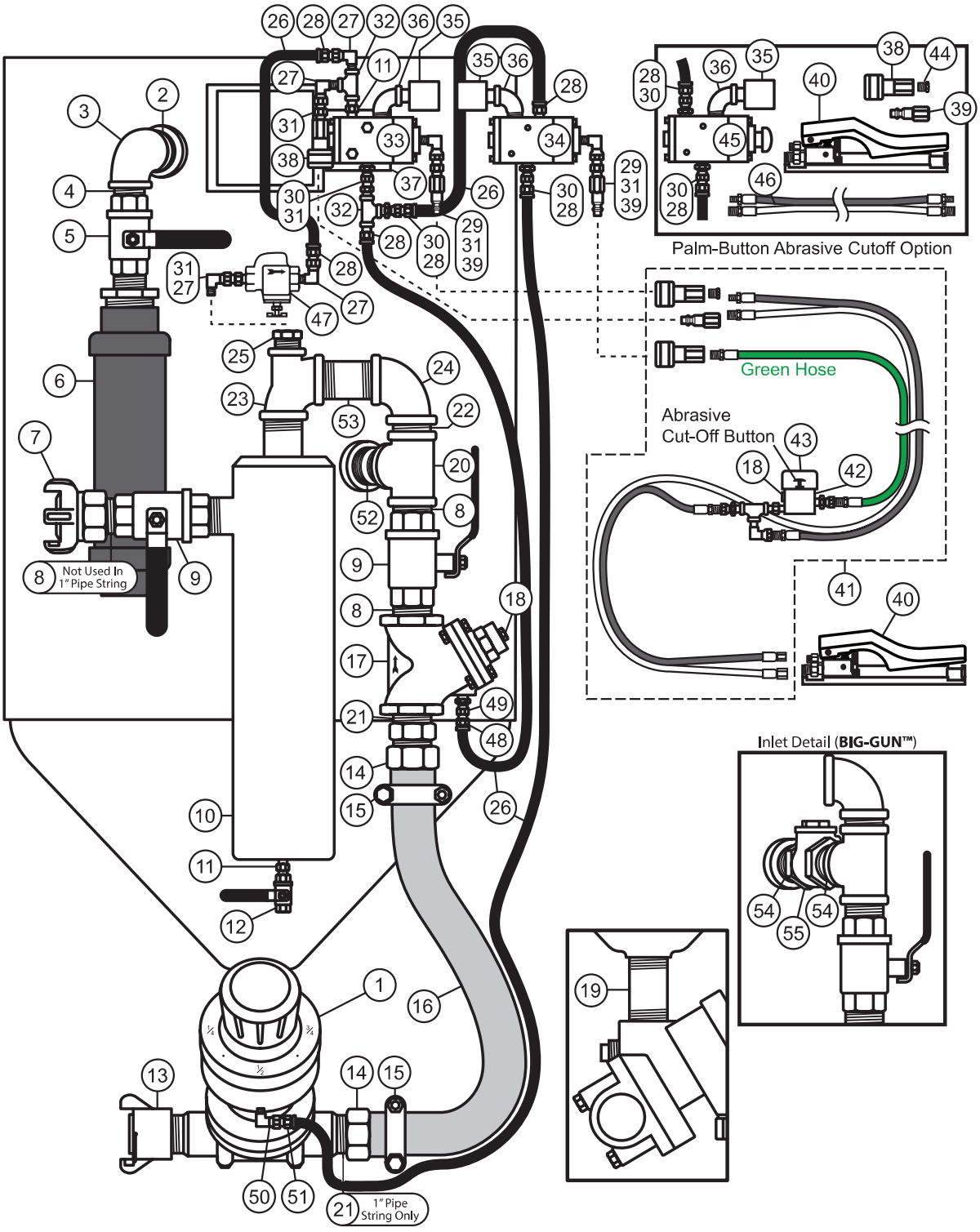

Copyright © 2022-2030 Pirate Brand®, All Rights Reserved

Pipe String Parts Lists

3.5/6.5 Cu Ft SPH Abrasive Blasters - Pneumatic Abrasive Cut-Off - Parts List

	1" PIPE STRING		1-1/4" PIPE STRING		1-1/2" BIG-GUN™ PIPE STRING	
1*	888-2149-106PB	APV, 1", W/ URETHANE SLEEVE	888-2149-107PB	APV, 1-1/4", W/ URETHANE SLEEVE	888-2149-108PB	APV, 1-1/2", W/ URETHANE SLEEVE
	888-2149-006PB	APV, 1", W/ TUNGSTEN CARBIDE SLEEVE	888-2149-007PB	APV, 1-1/4", W/ TUNGSTEN CARBIDE SLEEVE	888-2149-008PB	APV, 1-1/2", W/ TUNGSTEN CARBIDE SLEEVE
	888-2148-006PB	APV II, 1" W/ SOLID TUNGSTEN CARBIDE SLEEVE	888-2148-007PB	APV II, 1-1/4" W/ SOLID TUNGSTEN CARBIDE SLEEVE	888-2148-008PB	APV II, 1-1/2" W/ SOLID TUNGSTEN CARBIDE SLEEVE
2	888-3029-10711PB	NIPPLE, TBE, GALV, 1-1/4" x 3"				
3	888-3010-10706PB	ELBOW, REDUCING, GALV, 1-1/4" x 1"				
4	888-3029-10699PB	NIPPLE, TBE, GALV, 1" x CLOSED				
5	VB100	BALL VALVE, FULL PORT, 1" NPT				
6	888-2011-006PB	MUFFLER, BLOWDOWN, 1" MNPT				
7	UM-100	AIR HOSE COUPLING, 2 LUG, 1" MALE NPT	UF-125	AIR HOSE COUPLINGS, 4 LUG, 1-1/4" FEMALE NPT	UF-150	AIR HOSE COUPLINGS, 4 LUG, 1-1/2" FEMALE NPT
8	888-3029-10699PB	NIPPLE, TBE, GALV, 1" x CLOSED	888-3029-10799PB	NIPPLE, TBE, GALV, 1-1/4" x CLOSED	888-3029-10899PB	NIPPLE, TBE, GALV, 1-1/2" x CLOSED
9	VB100	BALL VALVE, FULL PORT, 1" NPT	VB125	BALL VALVE, FULL PORT, 1-1/4" NPT	VB150	BALL VALVE, FULL PORT, 1-1/2" NPT
10	888-1200-006PB	MOISTURE TRAP 1"	888-1200-007PB	MOISTURE TRAP 1-1/4"	888-1200-010PB	MOISTURE TRAP 1-1/2", **BIG-GUN™**
11	888-3031-31202PB	NIPPLE, HEX 1/4" MNPT x 1/4" MNPT				
12	VB025	BALL VALVE, FULL PORT, 1/4" NPT				
13	SB-2-IR	THD QUICK COUPLING, IRON, 1-1/2"	SB-1S-IR	THD CPLG, STD NPS, IRON, 1-1/4"	SB-3X-AL	THD QUICK COUPLING, ALUMINUM, 1-1/2", FULL PORT
14	888-4205-106PB	HOSE, INSERT SWIVEL, 1", INCLUDES GASKET	888-4205-107PB	HOSE, INSERT SWIVEL, 1-1/4", INCLUDES GASKET	888-4205-108PB	HOSE, INSERT SWIVEL, 1-1/2", INCLUDES GASKET
	888-4205-10699PB	HOSE, SWIVEL GASKET, 1"	888-4205-10799PB	HOSE, SWIVEL GASKET, 1-1/4"	888-4205-10899PB	HOSE, SWIVEL GASKET, 1-1/2"
15	888-4235-006PB	HOSE, CLAMP, DOUBLE BOLT, 1"	888-4235-007PB	HOSE, CLAMP, DOUBLE BOLT, 1-1/4"	888-4235-008PB	HOSE, CLAMP, DOUBLE BOLT, 1-1/2"
16	112-0100	HOSE, AIR, RED, NOMINAL 1" ID x 1-1/2" OD, WP 300 PSI	112-0114	HOSE, AIR, RED, NOMINAL 1-1/4" ID x 1-51/64" OD, WP 250 PSI	112-0112	HOSE, AIR, RED, NOMINAL 1-1/2" ID x 2-3/32" OD, WP 250 PSI
17*	888-2123-106PB	VALVE, AUTO AIR, 1", (NORMALLY CLOSED)	888-2123-107PB	VALVE, AUTO AIR, 1-1/4", (NORMALLY CLOSED)	888-2123-108PB-L	VALVE, AUTO AIR, 1-1/2" FULL FLOW, (NORMALLY CLOSED)
18	888-2014-300PB	VENT, 1/8"				
19	888-3028-10711PB	NIPPLE, TBE, SCHEDULE 80, GALV, 1-1/4" x 3"				
20	888-3013-10706PB	TEE, GALV, 1-1/4" x 1" x 1-1/4"	888-3011-107PB	TEE, GALV, 1-1/4"	888-3038-10807PB	TEE REDUCING, GALV, 1-1/2" x 1-1/2" x 1-1/4"
21	888-3031-30606PB	HEX NIPPLE, 1" x 1"	888-3031-30707PB	HEX NIPPLE, 1-1/4" x 1-1/4"	888-3031-30808PB	HEX NIPPLE, 1-1/2" x 1-1/2"
22	888-3029-10799PB	NIPPLE, TBE, GALV, 1-1/4" x CLOSED			888-3029-10899PB	NIPPLE, TBE, GALV, 1-1/2" x CLOSED
23	888-3013-10705PB	TEE, GALV, 90°, 1-1/4" x 3/4" x 1-1/4"			888-3013-10805PB	TEE, GALV, 90°, 1-1/2" x 3/4" x 1-1/2"
24	888-3000-107PB	ELBOW, GALV, 90°, 1-1/4"			888-3000-108PB	ELBOW, GALV, 90°, 1-1/2"
25	888-3026-10502PB	BUSHING, GALV, 3/4" x 1/4"				
26	888-4101-002PB	HOSE, AIR, INSTA-GRIP, BLACK, NOMINAL 1/4" ID, 300 PSI				
27	888-4203-50202PB	SWIVEL 90°, 1/4"MNPT x 1/4"F				
28	888-4200-30202PB	HOSE, PUSH-ON INSERT 1/4" x 1/4" NPT				
29	888-4203-50002PB	SWIVEL 90°, 1/8" MNPT x 1/4" F				
30	888-4201-50202PB	STRAIGHT SWIVEL, 1/4"MNPT x 1/4"F				
31	888-3031-30202PB	HEX NIPPLE 1/4" NPT x 1/4" W/BALL ST				
32	888-3011-102PB	TEE, GALV, 1/4"				
33	888-2229-000PB	VALVE, CONTROL, PNEUMATIC (NORMALLY CLOSED)				
	888-2229-00099PB	VALVE, CONTROL, PNEUMATIC, REPAIR KIT, HEAVY DUTY				
34	888-2229-010PB	VALVE, CONTROL, PNEUMATIC (NORMALLY OPEN)				
	888-2229-00099PB	VALVE, CONTROL, PNEUMATIC, REPAIR KIT, HEAVY DUTY				
35	888-2013-402PB	DUST ELIMINATOR, 1/4" MNPT				
36	888-3006-102PB	ELBOW, STREET, 90°, GALV, 1/4"				
37	888-7033-002PB	BRACKET, CONTROL VALVE				
38	888-4224-30102PB	BRASS SOCKET, 1/4"				
39	888-4224-30002PB	PLUG, 1/4"				
40**	888-2263-000PB	HANDLE, CONTROL, PNEUMATIC (DEADMAN CONTROL HANDLE)				
	888-2263-001PB	HANDLE, CONTROL, PNEUMATIC #2 (DEADMAN CONTROL HANDLE) (STANDARD INCLUDED HANDLE)				
	888-2263-002PB	HANDLE, CONTROL, PNEUMATIC #3 (DEADMAN CONTROL HANDLE)				
41	888-4100-50102PB	HOSE, TWINLINE ASSY 55' ACO W/ABRASIVE CUTOFF SWITCH				
	888-4100-70102PB	HOSE, TWINLINE ASSY 110' ACO W/ABRASIVE CUTOFF SWITCH				
42	888-2025-010PB	VALVE, ABRASIVE CUTOFF (PNEU)				
43	888-2025-10001PB	TOGGLE SWITCH GUARD				
44	888-3026-50200PB	BUSHING, PLATED 1/4" x 1/8"NPT				
45	888-2229-301PB	VALVE, CONTROL, KNOB OPERATED 3W2P				
	888-2229-30199PB	VALVE, CONTROL, KNOB OPERATED 3W2P, REPAIR KIT, HEAVY DUTY				
46	200-055	HOSE, TWINLINE CONTROL, ASSEMBLY, YEL/YEL W/BLACK STRIPE, NOMINAL 3/16" ID x 55'				
	200-110	HOSE, TWINLINE CONTROL, ASSEMBLY, YEL/YEL W/BLACK STRIPE, NOMINAL 3/16" ID x 110'				
47	888-2301-90290PB	STRAINER, BRZ 1/4" 90 MICRON				
48	888-4200-30200PB	HOSE, PUSH-ON INSERT 1/4" x 1/8" NPT			888-4200-30202PB	HOSE, PUSH-ON INSERT 1/4" x 1/4" NPT
49	888-4201-50000PB	STRAIGHT SWIVEL, 1/8" MNPT X 1/8" F	888-4203-50002PB	SWIVEL 90°, 1/8" MNPT x 1/4" F	888-4201-50202PB	STRAIGHT SWIVEL, 1/4"MNPT x 1/4"F
50	888-4203-50000PB	SWIVEL 90°, 1/8"MNPT X 1/8"F				
51	888-4200-30200PB	HOSE, PUSH-ON INSERT 1/4" x 1/8" NPT				
52	888-3028-10711PB	NIPPLE, TBE, SCHEDULE 80, GALV, 1-1/4" x 3"			NOT USED	
53	888-3029-10711PB	NIPPLE, TBE, GALV, 1-1/4" x 3"			888-3029-10814PB	NIPPLE, TBE, GALV, 1-1/2" x 4"
54	NOT USED				888-3028-10799PB	NIPPLE, TBE, SCHEDULE 80, GALV, 1-1/4" x CLOSED
55	NOT USED				888-2490-90701PB	CHECK VALVE, SWING 1-1/4", W/ 5/32" DIFFERENTIAL EQUALIZER HOLE

* See "***Valve Parts Lists***" Section for detailed parts list.
** See "***Control Handle Parts Lists***" Section for detailed parts list.

Copyright © 2022-2030 Pirate Brand®, All Rights Reserved

Pipe String Parts Lists

SPH SERIES - Electric Abrasive Cut-Off

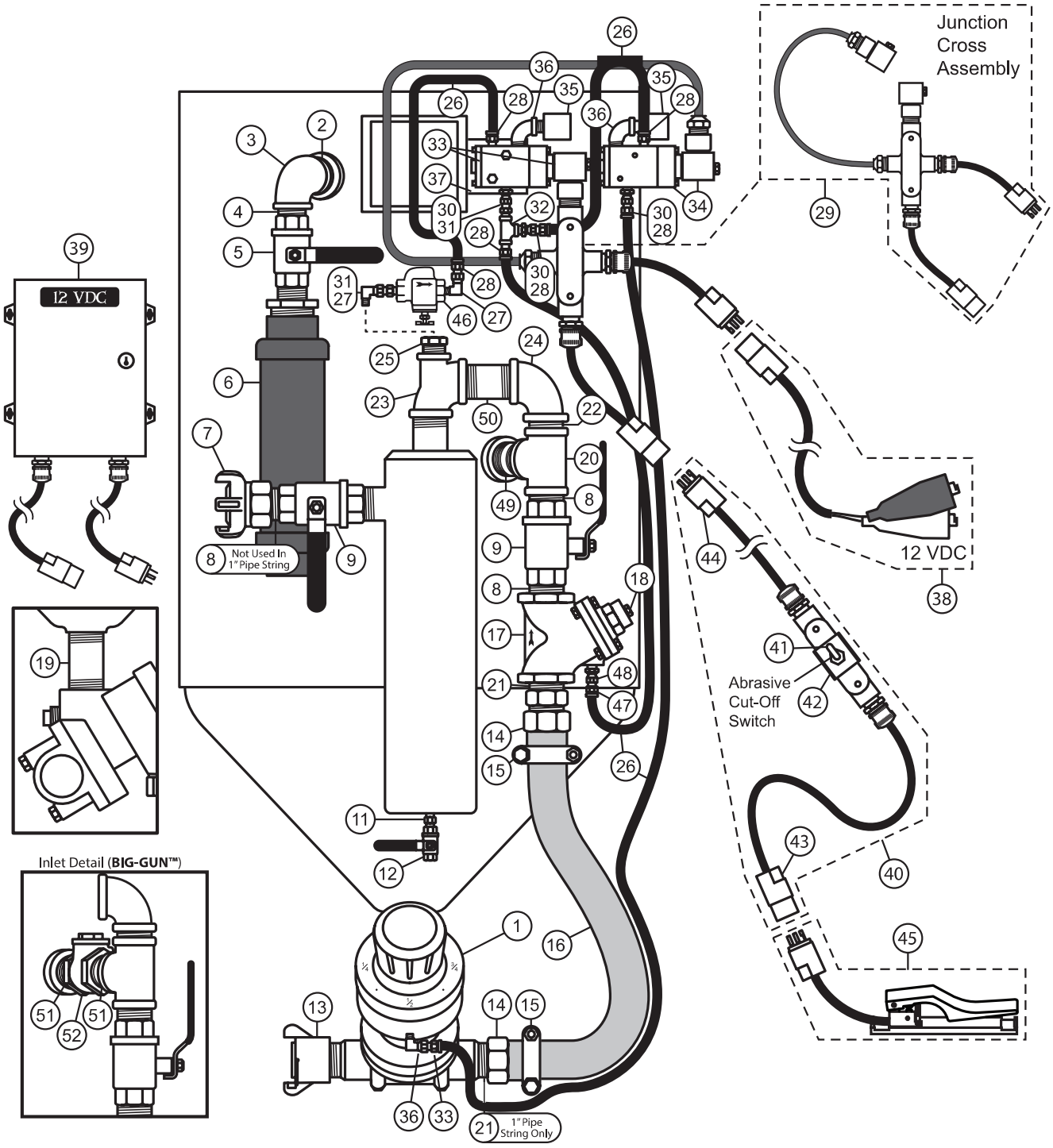

Copyright © 2022-2030 Pirate Brand®, All Rights Reserved

Pipe String Parts Lists

3.5/6.5 Cu Ft SPH Abrasive Blasters - Electric Abrasive Cut-Off - Parts List

	1" PIPE STRING		1-1/4" PIPE STRING		1-1/2" BIG-GUN™ PIPE STRING	
1*	888-2149-106PB	APV, 1", W/ URETHANE SLEEVE	888-2149-107PB	APV, 1-1/4", W/ URETHANE SLEEVE	888-2149-108PB	APV, 1-1/2", W/ URETHANE SLEEVE
	888-2149-006PB	APV, 1", W/ TUNGSTEN CARBIDE SLEEVE	888-2149-007PB	APV, 1-1/4", W/ TUNGSTEN CARBIDE SLEEVE	888-2149-008PB	APV, 1-1/2", W/ TUNGSTEN CARBIDE SLEEVE
	888-2148-006PB	APV II, 1" W/ SOLID TUNGSTEN CARBIDE SLEEVE	888-2148-007PB	APV II, 1-1/4" W/ SOLID TUNGSTEN CARBIDE SLEEVE	888-2148-008PB	APV II, 1-1/2" W/ SOLID TUNGSTEN CARBIDE SLEEVE
2	888-3029-10711PB	NIPPLE, TBE, GALV, 1-1/4" x 3"				
3	888-3010-10706PB	ELBOW, REDUCING, GALV, 1-1/4" x 1"				
4	888-3029-10699PB	NIPPLE, TBE, GALV, 1" x CLOSED				
5	VB100	BALL VALVE, FULL PORT, 1" NPT				
6	888-2011-006PB	MUFFLER, BLOWDOWN, 1" MNPT				
7	UM-100	AIR HOSE COUPLING, 2 LUG, 1" MALE NPT	UF-125	AIR HOSE COUPLINGS, 4 LUG, 1-1/4" FEMALE NPT	UF-150	AIR HOSE COUPLINGS, 4 LUG, 1-1/2" FEMALE NPT
8	888-3029-10699PB	NIPPLE, TBE, GALV, 1" x CLOSED	888-3029-10799PB	NIPPLE, TBE, GALV, 1-1/4" x CLOSED	888-3029-10899PB	NIPPLE, TBE, GALV, 1-1/2" x CLOSED
9	VB100	BALL VALVE, FULL PORT, 1" NPT	VB125	BALL VALVE, FULL PORT, 1-1/4" NPT	VB150	BALL VALVE, FULL PORT, 1-1/2" NPT
10	888-1200-006PB	MOISTURE TRAP 1"	888-1200-007PB	MOISTURE TRAP 1-1/4"	888-1200-010PB	MOISTURE TRAP 1-1/2", **BIG-GUN™**
11	888-3031-31202PB	NIPPLE, HEX 1/4" MNPT x 1/4" MNPT				
12	VB025	BALL VALVE, FULL PORT, 1/4" NPT				
13	SB-2-IR	THD QUICK COUPLING, IRON, 1-1/2"	SB-1S-IR	THD CPLG, STD NPS, IRON, 1-1/4"	SB-3X-AL	THD QUICK COUPLING, ALUMINUM, 1-1/2", FULL PORT
14	888-4205-106PB	HOSE, INSERT SWIVEL, 1", INCLUDES GASKET	888-4205-107PB	HOSE, INSERT SWIVEL, 1-1/4", INCLUDES GASKET	888-4205-108PB	HOSE, INSERT SWIVEL, 1-1/2", INCLUDES GASKET
	888-4205-10699PB	HOSE, SWIVEL GASKET, 1"	888-4205-10799PB	HOSE, SWIVEL GASKET, 1-1/4"	888-4205-10899PB	HOSE, SWIVEL GASKET, 1-1/2"
15	888-4235-006PB	HOSE, CLAMP, DOUBLE BOLT, 1"	888-4235-007PB	HOSE, CLAMP, DOUBLE BOLT, 1-1/4"	888-4235-008PB	HOSE, CLAMP, DOUBLE BOLT, 1-1/2"
16	112-0100	HOSE, AIR, RED, NOMINAL 1" ID x 1-1/2" OD, WP 300 PSI	112-0114	HOSE, AIR, RED, NOMINAL 1-1/4" ID x 1-51/64" OD, WP 250 PSI	112-0112	HOSE, AIR, RED, NOMINAL 1-1/2" ID x 2-3/32" OD, WP 250 PSI
17*	888-2123-106PB	VALVE, AUTO AIR, 1", (NORMALLY CLOSED)	888-2123-107PB	VALVE, AUTO AIR, 1-1/4", (NORMALLY CLOSED)	888-2123-108PB-L	VALVE, AUTO AIR, 1-1/2" FULL FLOW, (NORMALLY CLOSED)
18	888-2014-300PB	VENT, 1/8"				
19	888-3028-10711PB	NIPPLE, TBE, SCHEDULE 80, GALV, 1-1/4" x 3"				
20	888-3013-10706PB	TEE, GALV, 1-1/4" x 1" x 1-1/4"	888-3011-107PB	TEE, GALV, 1-1/4"	888-3038-10807PB	TEE REDUCING, GALV, 1-1/2" x 1-1/2" x 1-1/4"
21	888-3031-30606PB	HEX NIPPLE, 1" x 1"	888-3031-30707PB	HEX NIPPLE, 1-1/4" x 1-1/4"	888-3031-30808PB	HEX NIPPLE, 1-1/2" x 1-1/2"
22	888-3029-10799PB	NIPPLE, TBE, GALV, 1-1/4" x CLOSED			888-3029-10899PB	NIPPLE, TBE, GALV, 1-1/2" x CLOSED
23	888-3013-10705PB	TEE, GALV, 90°, 1-1/4" x 3/4" x 1-1/4"			888-3013-10805PB	TEE, GALV, 90°, 1-1/2" x 3/4" x 1-1/2"
24	888-3000-107PB	ELBOW, GALV, 90°, 1-1/4"			888-3000-108PB	ELBOW, GALV, 90°, 1-1/2"
25	888-3026-10502PB	BUSHING, GALV, 3/4" x 1/4"				
26	888-4101-002PB	HOSE, AIR, INSTA-GRIP, BLACK, NOMINAL 1/4" ID, 300 PSI				
27	888-4203-50202PB	SWIVEL 90°, 1/4"MNPT x 1/4"F				
28	888-4200-30202PB	HOSE, PUSH-ON INSERT 1/4" x 1/4" NPT				
29	888-7112-00002PB	JUNCTION CROSS ASSEMBLY, SMALL & BULK BLASTERS, 12VDC, ACO ON CORD W/ TWIST-LOCK CONNECTORS, (1) OUTLET				
	888-7112-00002PB-01	JUNCTION CROSS ASSEMBLY, SMALL & BULK BLASTERS, 12VDC, ACO ON CORD W/ SEALED WATERPROOF CONNECTORS, (1) OUTLET				
30	888-4201-50202PB	STRAIGHT SWIVEL, 1/4"MNPT x 1/4"F				
31	888-3031-30202PB	HEX NIPPLE 1/4" NPT x 1/4" W/BALL ST				
32	888-3011-102PB	TEE, GALV, 1/4"				
33	888-2229-100PB	VALVE, CONTROL, ELECTRIC, 12VDC (NORMALLY CLOSED)				
	888-2229-10099PB	VALVE, CONTROL, REPAIR KIT, ELECTRIC, HEAVY DUTY				
34	888-2229-600PB	VALVE, CONTROL, ELECTRIC, 12VDC (NORMALLY OPEN)				
	888-2229-10099PB	VALVE, CONTROL, REPAIR KIT, ELECTRIC, HEAVY DUTY				
35	888-2013-402PB	DUST ELIMINATOR, 1/4" MNPT				
36	888-3006-102PB	ELBOW, STREET, 90°, GALV, 1/4"				
37	888-7033-002PB	BRACKET, CONTROL VALVE				
38	888-7072-012PB	POWER CORD, 25' 12VDC, 3-LUG, X-TREME DUTY™ URETHANE CORD				
	888-7072-01201PB	POWER CORD W/SEALED WATERPROOF CONNECTOR, 25' 12VDC, 3 PRONG, X-TREME DUTY™ URETHANE CORD				
39	PB-SMP3WP	POWER SUPPLY 120AC INPUT/12VDC @ 2.5 AMP OUTPUT, 4 CONTROL VALVE MAX LOAD, 3 PRONG CONNECTOR, X-TREME DUTY™ URETHANE CORD				
40	888-7075-055PB	CORD W/TWIST-LOCK CONNECTORS & ABRASIVE CUTOFF SWITCH ASSEMBLY, 55', 3-PRONG, 3-WIRE, X-TREME DUTY™ URETHANE CONTROL CORD				
	888-7075-110PB	CORD W/TWIST-LOCK CONNECTORS & ABRASIVE CUTOFF SWITCH ASSEMBLY, 110', 3-PRONG, 3-WIRE, X-TREME DUTY™ URETHANE CONTROL CORD				
	888-7075-05501PB	CORD W/SEALED WATERPROOF CONNECTORS & ABRASIVE CUTOFF SWITCH ASSEMBLY, 55', 3 PRONG, 3 WIRE, X-TREME DUTY™ URETHANE CONTROL CORD				
	888-7075-11001PB	CORD W/SEALED WATERPROOF CONNECTORS & ABRASIVE CUTOFF SWITCH ASSEMBLY, 110', 3 PRONG, 3 WIRE, X-TREME DUTY™ URETHANE CONTROL CORD				
41	888-2025-10002PB	ABRA CUTOFF SWITCH (ELEC)				
42	888-2025-10001PB	TOGGLE SWITCH GUARD				
43	888-7109-300PB	ELECTRIC CONNECTOR, FEMALE, TWIST-LOCK, 3 PRONG				
	888-7109-30002PB	ELECTRIC CONNECTOR, SEALED WATERPROOF, FEMALE, 3 PRONG (APPROPRIATE FOR USE WITH STEEL ABRASIVES)				
44	888-7109-301PB	ELECTRIC CONNECTOR, MALE, TWIST-LOCK, 3 PRONG				
	888-7109-30102PB	ELECTRIC CONNECTOR, SEALED WATERPROOF, MALE, 3 PRONG (APPROPRIATE FOR USE WITH STEEL ABRASIVES)				
45**	888-2263-40001PB	HANDLE, CONTROL, ELECTRIC w/TWIST-LOCK PLUG **(NOT FOR USE WITH STEEL ABRASIVES)**				
	888-2263-40101PB	HANDLE, CONTROL, ELECTRIC #2 w/TWIST-LOCK PLUG **(NOT FOR USE WITH STEEL ABRASIVES)** **(STANDARD INCLUDED NON-SEALED CONNECTOR HANDLE)**				
	888-2263-40102PB	HANDLE, CONTROL, ELECTRIC #2 w/3 PART SEALED STRAIN RELIEF **(APPROPRIATE FOR USE WITH STEEL ABRASIVES)**				
	888-2263-40104PB	HANDLE, CONTROL, ELECTRIC #2 w/**SEALED WATERPROOF CONNECTOR** **(APPROPRIATE FOR USE WITH STEEL ABRASIVES)**				
46	888-2301-90290PB	STRAINER, BRZ 1/4" 90 MICRON				
47	888-4200-30200PB	HOSE, PUSH-ON INSERT 1/4" x 1/8" NPT			888-4200-30202PB	HOSE, PUSH-ON INSERT 1/4" x 1/4" NPT
48	888-4201-50000PB	STRAIGHT SWIVEL, 1/8" MNPT X 1/8" F	888-4203-50002PB	SWIVEL 90°, 1/8" MNPT x 1/4" F	888-4201-50202PB	STRAIGHT SWIVEL, 1/4"MNPT x 1/4"F
49	888-3028-10711PB	NIPPLE, TBE, SCHEDULE 80, GALV, 1-1/4" x 3"			NOT USED	
50	888-3029-10711PB	NIPPLE, TBE, GALV, 1-1/4" x 3"			888-3029-10814PB	NIPPLE, TBE, GALV, 1-1/2" x 4"
51	NOT USED				888-3028-10799PB	NIPPLE, TBE, SCHEDULE 80, GALV, 1-1/4" x CLOSED
52	NOT USED				888-2490-90701PB	CHECK VALVE, SWING 1-1/4", W/ 5/32" DIFFERENTIAL EQUALIZER HOLE

* See "***Valve Parts Lists***" Section for detailed parts list.

** See "***Control Handle Parts Lists***" Section for detailed parts list.

Copyright © 2022-2030 Pirate Brand®, All Rights Reserved

Fast-Stop™ Systems

The Pirate Brand® Fast-Stop™ Blast Hose Safety Relief System provides additional operator safety by drastically reducing the time it takes for the blast hose to depressurize after the control handle is released. This results in reduced whipping of the blast hose should the operator loose their grip and drop the control handle & hose. Since the Fast-Stop™ exhausts from the opposite end of the blast hose, it has the added safety of being able to depressurize the system even when an obstruction jams in the nozzle throat or a piece of heavy equipment parks on the blast hose.

The Fast-Stop™ Blast Hose Safety System is available factory Installed on SPH Bulk Blasters, 6.5, 10 & 20 cu ft abrasive blasters with electric controls. Customer installable kits are sold per outlet and require a SPH System with electric controls in good working order. Customer is to supply and install a suitable mounting platform for customer installed systems. Please contact a qualified Pirate Brand® representative prior to installing a Fast-Stop™ kit to make sure the abrasive blaster is safe to use as a Fast-Stop™ system. WARNING: It is dangerous to install a Fast-Stop™ kit on an abrasive blaster it is not designed to work with.

Fast-Stop™ Replacement Components

999-8400-01834PB 6" FAST-STOP™ DIFFUSER ASSEMBLY W/ URETHANE CAP	**1PV-C10** VALVE, #400 PINCH, COMPLETE
999-8400-01835PB URETHANE CAP FOR 6" FAST-STOP™ DIFFUSER	**888-4215-50808PB** 1-1/2" FAST-STOP BLAST HOSE COUPLING
999-8400-01824PB Y FITTING, 1-1/2" FORGED SCHEDULE 120 STEEL W/ SCHEDULE 80 NIPPLES	**520-842** HOSE, BLAST, BLACK, NOMINAL 1-1/2" ID x 2-3/8" OD, 4 PLY, WP 150 PSI
888-3028-10899PB NIPPLE, TBE, SCHEDULE 80, GALV, 1-1/2" X CLOSED	**500-842** **SURVIVOR**™ HOSE, BLAST, BLACK, NOMINAL 1-1/2" ID x 2-3/8" OD, 4 PLY, WP 175 PSI

How The Fast-Stop™ System Works

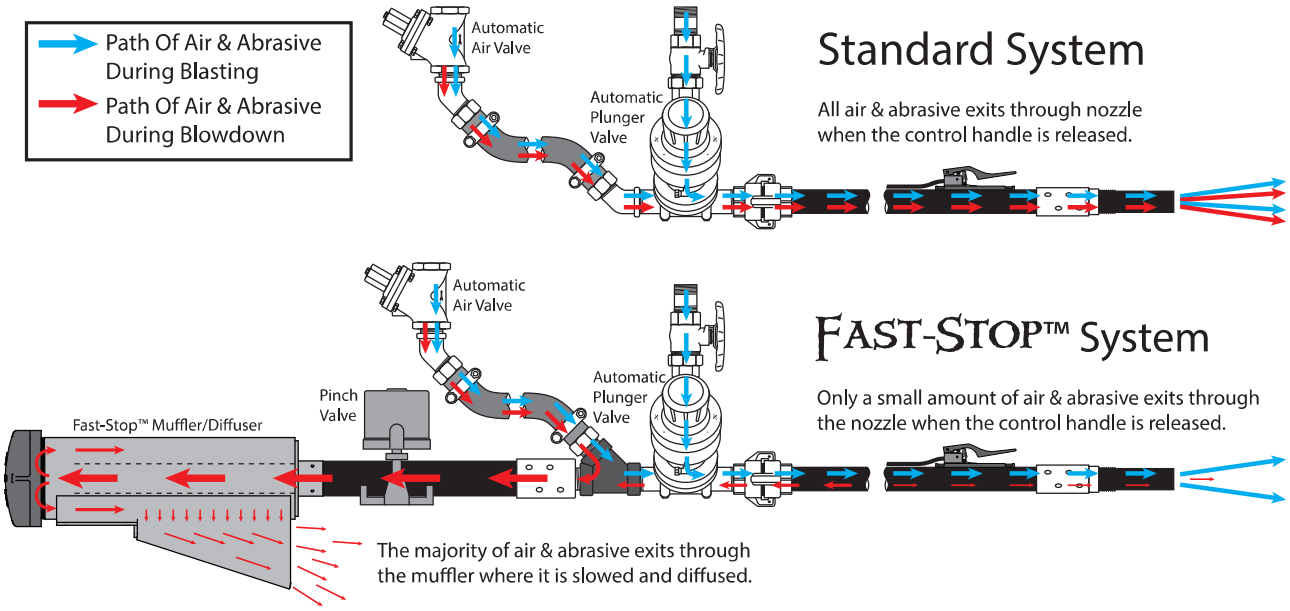

Copyright © 2022-2030 Pirate Brand®, All Rights Reserved

Fast-Stop™ Systems

Pinch Valve Control Connections

⚠ WARNING

It is important to make the connections at the pinch valve as shown below for proper operation and to maximize Fast-Stop™ system effectiveness. **Always** make connections at the Fast-Stop™ pinch valve as shown below.

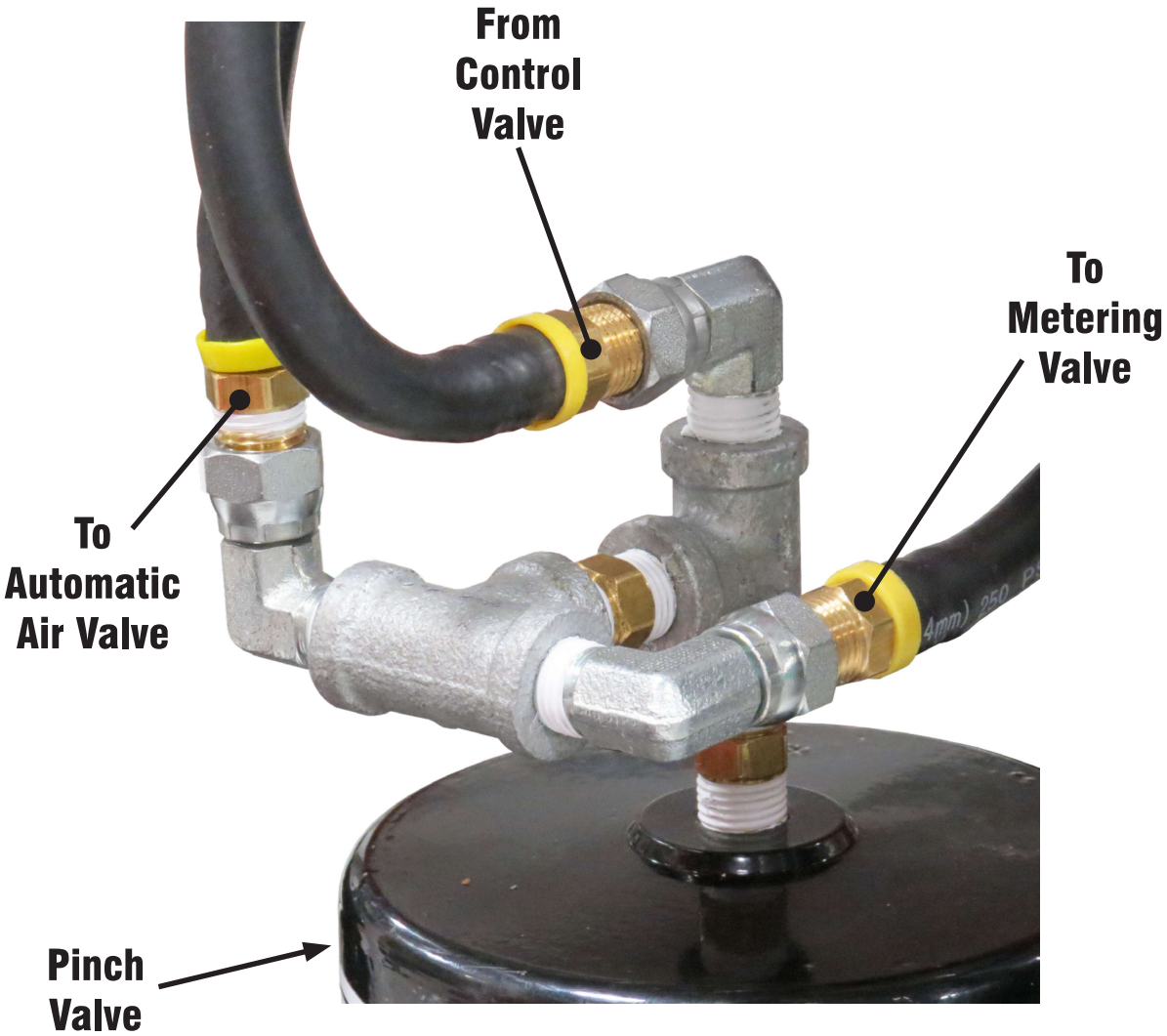

Copyright © 2022-2030 Pirate Brand®, All Rights Reserved

Control Handle Parts Lists

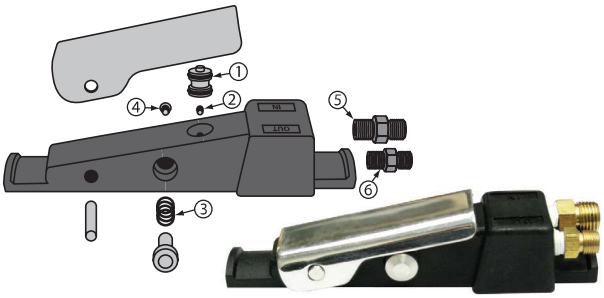

Pneumatic Control Handle

NOT FOR USE WITH STEEL ABRASIVES

	888-2263-000PB	HANDLE, CONTROL, PNEUMATIC
	888-2263-00099PB	HANDLE, CONTROL, PNEUMATIC, REPAIR KIT, INCLUDES # 1, 2, 3 & 4
5	888-3031-30202PB	HEX NIPPLE 1/4" NPT x 1/4" W/BALL ST
6	888-3031-30000PB	HEX NIPPLE 1/8" NPT x 1/8" W/BALL ST

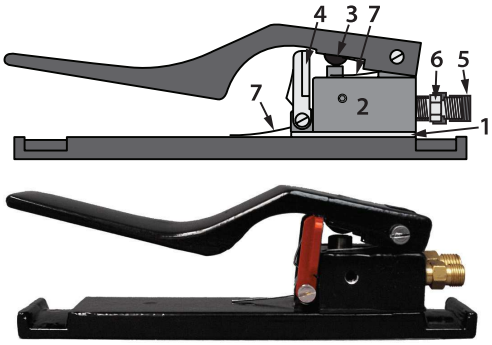

Pneumatic Control Handle #2

	888-2263-001PB	HANDLE, CONTROL, PNEUMATIC #2
	888-2263-00199PB	HANDLE, CONTROL, PNEUMATIC #2, REPAIR KIT, INCLUDES # 1, 2 & 3
4	888-2263-00108PB	HANDLE, CONTROL, SAFETY FLAP
5	888-3031-30202PB	HEX NIPPLE 1/4" NPT x 1/4" W/BALL ST
6	888-3031-30000PB	HEX NIPPLE 1/8" NPT x 1/8" W/BALL ST
7	888-2263-00111PB	HANDLE, CONTROL, SPRING

Pneumatic Control Handle #3

NOT FOR USE WITH STEEL ABRASIVES

	888-2263-002PB	HANDLE, CONTROL, PNEUMATIC #3
	888-2263-00299PB	HANDLE, CONTROL, PNEUMATIC #3, REPAIR KIT
	888-3031-30202PB	HEX NIPPLE 1/4" NPT x 1/4" W/BALL ST
	888-3031-30000PB	HEX NIPPLE 1/8" NPT x 1/8" W/BALL ST

Electric Control Handle

NOT FOR USE WITH STEEL ABRASIVES

	888-2263-400PB	HANDLE, CONTROL, ELECTRIC
	888-2263-40001PB	HANDLE, CONTROL, ELECTRIC W/ PLUG

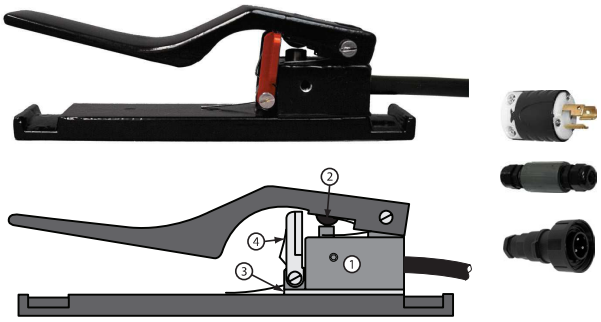

Electric Control Handle #2

	888-2263-401PB	HANDLE, CONTROL, ELECTRIC #2
	888-2263-40101PB	HANDLE, CONTROL, ELECTRIC #2 W/TWIST-LOCK PLUG
	888-2263-40102PB	HANDLE, CONTROL, ELECTRIC #2 W/**3 PART SEALED STRAIN RELIEF** **(FOR USE WITH STEEL ABRASIVES)**
	888-2263-40104PB	HANDLE, CONTROL, ELECTRIC #2 W/ SEALED WATERPROOF CONNECTOR **(FOR USE WITH STEEL ABRASIVES)**
4	888-2263-00108PB	HANDLE, CONTROL, SAFETY FLAP
	888-2263-00111PB	HANDLE, CONTROL, SPRING

Copyright © 2022-2030 Pirate Brand®, All Rights Reserved

Valve Parts Lists

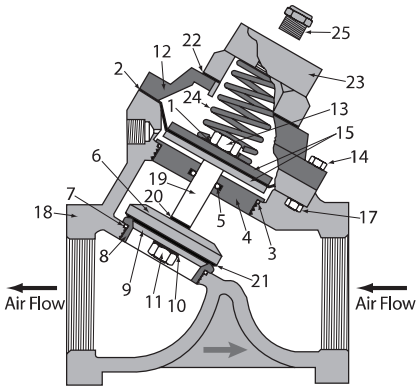

1" Auto Air Valve

	888-2123-106PB	VALVE, AUTO AIR, 1", (NORMALLY CLOSED)
	888-2123-00699PB	VALVE, AUTO AIR, 1/2", 3/4" & 1", REPAIR KIT INCLUDES # 1, 2, 3, 5, 7, 11, 13, 20 & 21
24	888-2123-10624PB	VALVE, AUTO AIR, 1/2", 3/4" & 1", SPRING
25	888-2014-300PB	VENT, 1/8"

1-1/4" Auto Air Valve

	888-2123-107PB	VALVE, AUTO AIR, 1-1/4", (NORMALLY CLOSED)
	888-2123-00799PB	VALVE, AUTO AIR, 1-1/4 & 1-1/2, REPAIR KIT INCLUDES # 1, 2, 3, 5, 7, 11, 13, 20 & 21
24	888-2123-10724PB	VALVE, AUTO AIR, 1-1/4 & 1-1/2, SPRING
25	888-2014-300PB	VENT, 1/8"

1-1/2" Auto Air Valve

	888-2123-108PB	VALVE, AUTO AIR, 1-1/2", (NORMALLY CLOSED)
	888-2123-00799PB	VALVE, AUTO AIR, 1-1/4 & 1-1/2, REPAIR KIT INCLUDES # 1, 2, 3, 5, 7, 11, 13, 20 & 21
24	888-2123-10724PB	VALVE, AUTO AIR, 1-1/4 & 1-1/2, SPRING
25	888-2014-300PB	VENT, 1/8"

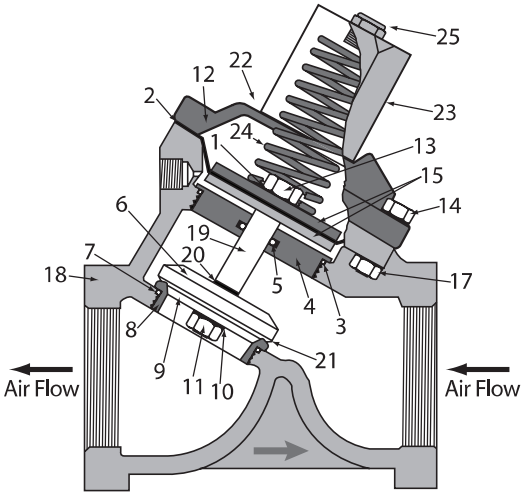

1-1/2" Auto Air Valve (BIG-GUN™)

	888-2123-108PB-L	VALVE, AUTO AIR, 1-1/2" FULL FLOW, (NORMALLY CLOSED)
	888-2123-00999PB	VALVE, AUTO AIR, 1-1/2"L & 2" FULL FLOW,REPAIR KIT INCLUDES # 1, 2, 3, 5, 7, 11, 13, 20 & 21
24	888-2123-10924PB	VALVE, AUTO AIR, 1-1/2"L & 2" FULL FLOW, SPRING
25	888-2014-300PB	VENT, 1/8"

Copyright © 2022-2030 Pirate Brand®, All Rights Reserved

Valve Parts Lists

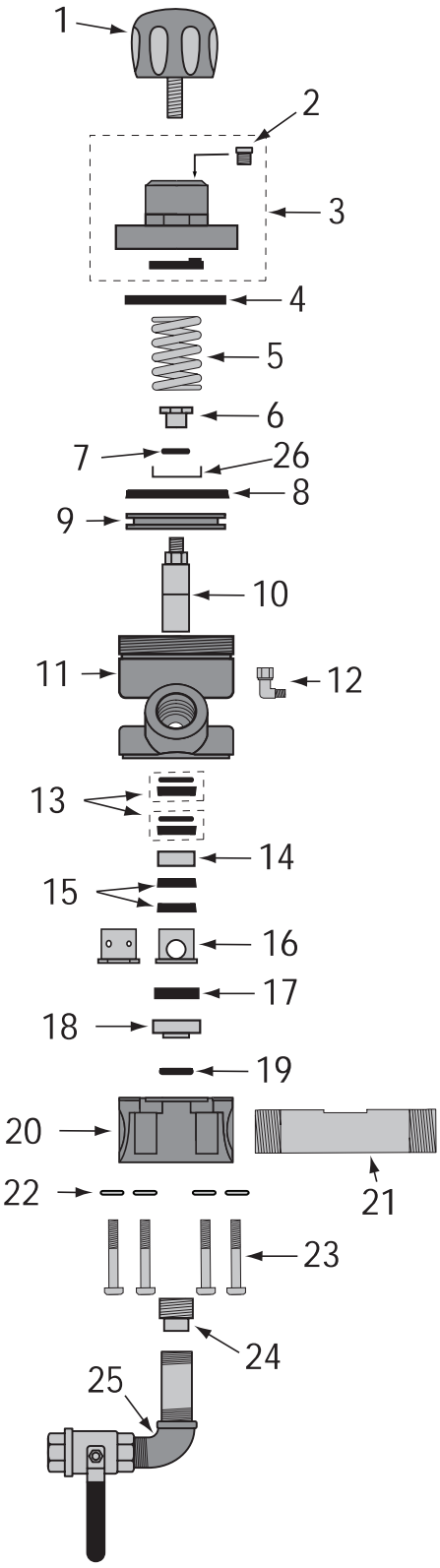

APVII™ (Automatic Plunger Valve II) Metering Valve

	888-2148-006PB	APV II, 1" W/SOLID TUNGSTEN CARBIDE SLEEVE
	888-2148-007PB	APV II, 1-1/4" W/SOLID TUNGSTEN CARBIDE SLEEVE
	888-2148-008PB	APV II, 1-1/2" W/SOLID TUNGSTEN CARBIDE SLEEVE
	888-2148-00020PB	APV TO APV II CONVERSION KIT
	888-2148-00099PB	APV II, REPAIR KIT W/SOLID TUNGSTEN CARBIDE SLEEVE, INCLUDES # 8, 10, (2)13, (2)15, 16, 17, 18 & 19
	888-2148-00098PB	APV II, SEAL KIT, SEALS ONLY, W/URETHANE SEAT, INCLUDES #8, (2)13, (2)15, 17 & 19
1	888-2148-00001PB	APV II, KNOB (BLACK)
2	888-2014-300PB	VENT, 1/8"
3	888-2148-00002PB	APV & APV II, CAP ASSEMBLY
4	888-2149-00019PB	APV & APV II, BUMP RING
5	888-2149-00003PB	APV & APV II, SPRING
6	888-2148-00015PB	APV II, PLUNGER STOP (STAINLESS)
7	888-2148-00016PB	APV II, NYLON WASHER
8	888-2148-00004PB	APV, APV II, & T2V PISTON SEAL (GREEN URETHANE)
9	888-2148-00005PB	APV II, PISTON
10	888-2148-00007PB	APV II, PLUNGER (STAINLESS/SOLID TUNGSTEN CARBIDE)
11	888-2148-00009PB	APV II, CYLINDER, W/1" NPT CLEANOUT
12	888-4203-50000PB	SWIVEL 90°, 1/8"MNPT X 1/8"F
13	888-2148-00006PB	APV, APV II, MPV, MPV II & MPV MINI, PLUNGER SEAL W/ "O"-RING (CLEAR URETHANE)
14	888-2148-00017PB	APV II, PLUNGER BUSHING (STAINLESS)
15	888-2148-30006PB	APV II, PLUNGER SEAL W/O O-RING (CLEAR URETHANE)
16	888-2148-00013PB	APV II / APV, SOLID TUNGSTEN CARBIDE SLEEVE
	888-2149-32020PB	APV & APV II, MULTI PORTED SLEEVE STAINLESS STEEL
17	888-2149-00010PB	APV & APV II, URETHANE SEAT (HEAVY DUTY BLUE)
18	888-2148-00014PB	APV II, INSERT (STAINLESS)
19	888-2149-00018PB	APV & APV II, O-RING
20	888-2148-30011PB	APV II, BASE W/CLEANOUT
21	888-2149-00615PB	APV & APV II, PIPE NIPPLE 1" FEMALE x 1-1/2" MALE
	888-2149-00715PB	APV & APV II, PIPE NIPPLE 1-1/4" MALE x 1-1/4" MALE
	888-2149-00815PB	APV & APV II, PIPE NIPPLE 1-1/2" MALE x 1-1/2" MALE
22	888-7027-50302PB	APV, APV II & T2V, FLAT WASHER 3/8" SAE (10 PACK)
23	888-7010-50755PB	APV & APV II, BOLT (4 PACK)
24	888-3014-206PB	APV II & MPV II, PLUG, PIPE STAINLESS 1"
25	999-8403-00054PB	APV II & T2V CLEANOUT BALL VALVE ASSY
26	888-2148-00021PB	APV II, SPRING SEAT (STAINLESS)

Copyright © 2022-2030 Pirate Brand®, All Rights Reserved

Valve Parts Lists

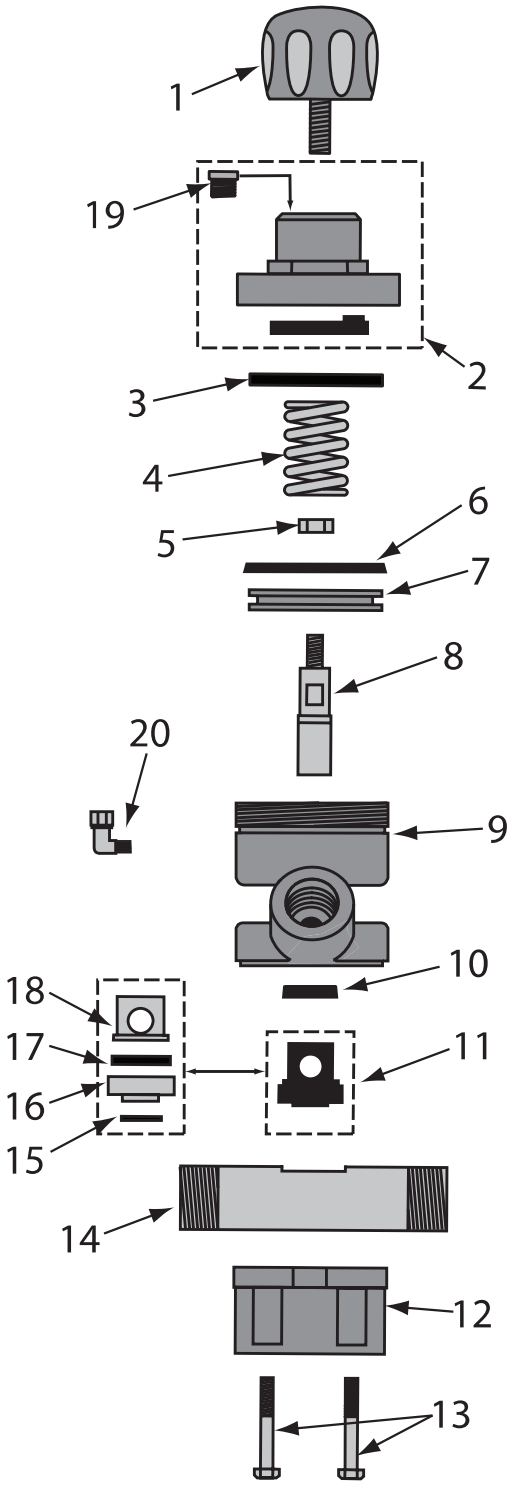

APV (Automatic Plunger Valve) Metering Valve

	888-2149-006PB	APV, 1", W/TC SLEEVE
	888-2149-106PB	APV, 1", W/URETHANE SLEEVE
	888-2149-007PB	APV, 1-1/4", W/TC SLEEVE
	888-2149-107PB	APV, 1-1/4", W/URETHANE SLEEVE
	888-2149-008PB	APV, 1-1/2", W/TC SLEEVE
	888-2149-108PB	APV, 1-1/2", W/URETHANE SLEEVE
	888-2149-00099PB	APV, REPAIR KIT W/TC SLEEVE, INCLUDES # 6, 8, 10, 15, 16, 17 & 18
	888-2149-00098PB	APV, SEAL KIT, SEALS ONLY W/URETHANE SEAT, INCLUDES # 6, 10, 15 & 17
	888-2149-10099PB	APV, REPAIR KIT W/URETHANE SLEEVE, INCLUDES # 6, 8, 10 & 11
	888-2149-10098PB	APV, SEAL KIT, SEALS ONLY W/URETHANE SLEEVE, INCLUDES 6, 10, & 11
1	888-2149-00001PB	APV, KNOB
2	888-2148-00002PB	APV & APV II, CAP ASSEMBLY
3	888-2149-00019PB	APV & APV II, BUMP RING
4	888-2149-00003PB	APV & APV II, SPRING
5	888-2149-00008PB	APV & TV2, NUT
6	888-2148-00004PB	APV, APV II, & T2V PISTON SEAL (GREEN URETHANE)
7	888-2149-00005PB	APV, PISTON
8	888-2149-00007PB	APV, TUNGSTEN CARBIDE, PLUNGER
9	888-2149-00009PB	APV, CYLINDER
10	888-2148-00006PB	APV, APV II, MPV, MPV II & MPV MINI, PLUNGER SEAL W/ "O"-RING (CLEAR URETHANE)
11	888-2149-10013PB	APV, SLEEVE, URETHANE
12	888-2149-00011PB	APV, BASE
13	888-7010-50755PB	APV & APV II, BOLT (4 PACK)
14	888-2149-00615PB	APV & APV II, PIPE NIPPLE 1" FEMALE x 1-1/2" MALE
	888-2149-00715PB	APV & APV II, PIPE NIPPLE 1-1/4" MALE x 1-1/4" MALE
	888-2149-00815PB	APV & APV II, PIPE NIPPLE 1-1/2" MALE x 1-1/2" MALE
15	888-2149-00018PB	APV & APV II, O-RING
16	888-2149-00014PB	APV, INSERT
17	888-2149-00010PB	APV & APV II, URETHANE SEAT (HEAVY DUTY BLUE)
18	888-2148-00013PB	APV II / APV, SOLID TUNGSTEN CARBIDE SLEEVE
	888-2149-32020PB	APV & APV II, MULTI PORTED SLEEVE STAINLESS
19	888-2014-300PB	VENT, 1/8"
20	888-4203-50000PB	SWIVEL 90°, 1/8"MNPT X 1/8"F

Copyright © 2022-2030 Pirate Brand®, All Rights Reserved

Valve Parts Lists

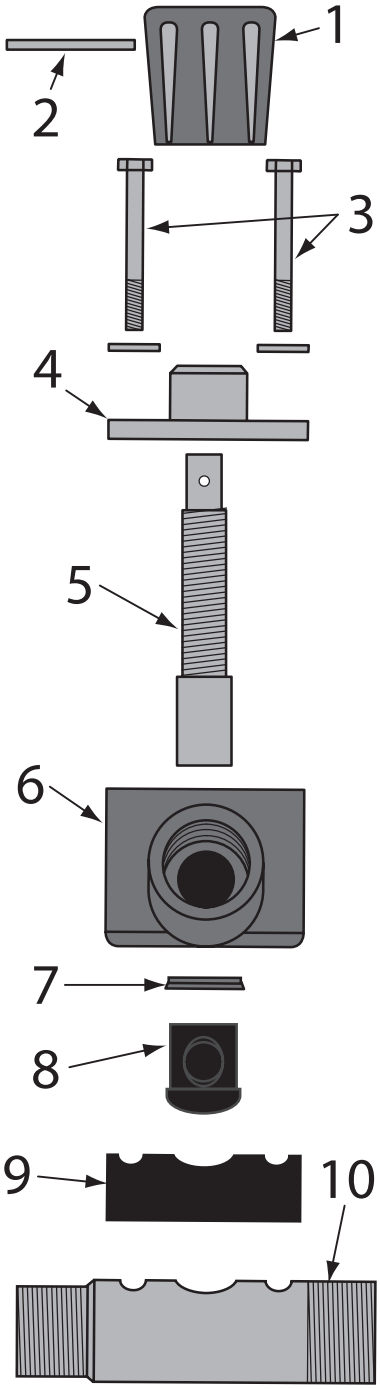

MPV (Manual Plunger Valve) Metering Valve		
	888-2125-106PB	MPV, 1", W/URETHANE SLEEVE
	888-2125-107PB	MPV, 1-1/4", W/URETHANE SLEEVE
	888-2125-108PB	MPV, 1-1/2", W/URETHANE SLEEVE
	888-2125-10099PB	MPV, REPAIR KIT W/URETHANE SLEEVE, INCLUDES #2, 5, 7, 8 & 9
	888-2125-10098PB	MPV, SEAL KIT, W/URETHANE SLEEVE, INCLUDES #7, 8 & 9
1	888-2125-00001PB	MPV & MPV MINI, KNOB
2	888-2125-00004PB	MPV, MPV II & MPV MINI, ROLL PIN
3	888-7010-50556PB	MPV, BOLT W/WASHER
4	888-2125-00002PB	MPV & MPV MINI, CAP
5	888-2125-00005PB	MPV, MPV II & MPV MINI, PLUNGER
6	888-2125-00006PB	MPV, BODY
7	888-2148-00006PB	APV, APV II, MPV, MPV II & MPV MINI, PLUNGER SEAL W/ "O"-RING (CLEAR URETHANE)
8	888-2125-10008PB	MPV & MPV II, SLEEVE, URETHANE
9	888-2125-00009PB	MPV, GASKET
10	888-2125-00610PB	MPV, PIPE NIPPLE 1" FEMALE x 1-1/2" MALE
	888-2125-00710PB	MPV, PIPE NIPPLE 1-1/4" MALE x 1-1/2" MALE
	888-2125-00810PB	MPV, PIPE NIPPLE 1-1/2" MALE x 1-1/2" MALE

Copyright © 2022-2030 Pirate Brand®, All Rights Reserved

Valve Parts Lists

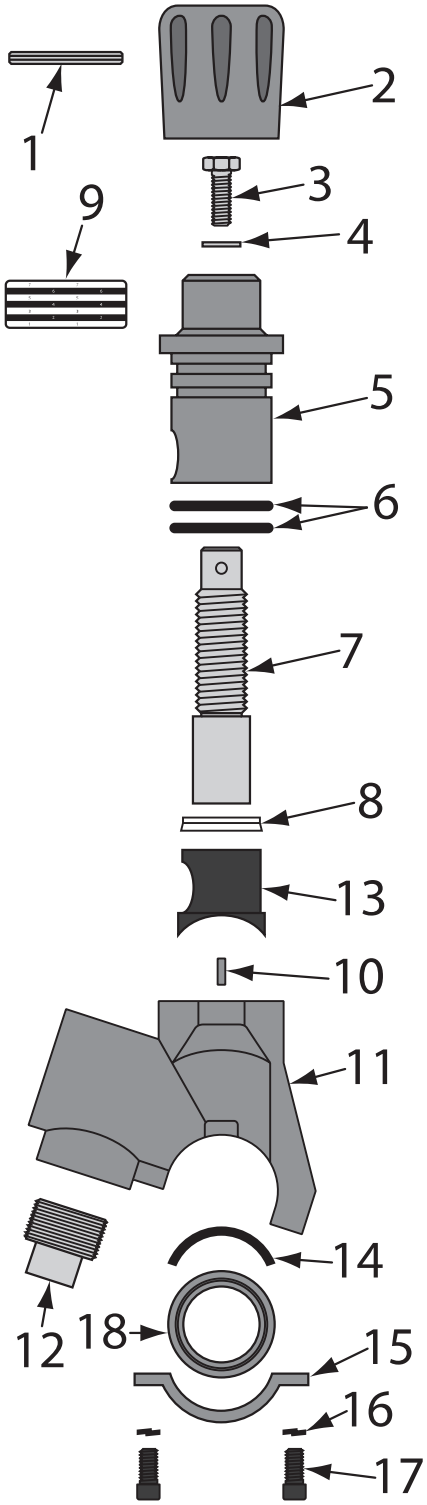

MPVII™ (Manual Plunger Valve II) Metering Valve

	888-2126-106PB	MPV II, 1" W/ URETHANE SLEEVE
	888-2126-107PB	MPV II, 1-1/4" W/ URETHANE SLEEVE
	888-2126-108PB	MPV II, 1-1/2" W/ URETHANE SLEEVE
	888-2126-10099PB	MPV II, REPAIR KIT W/URETHANE SLEEVE, INCLUDES # 1, (2)6, 7, 8, 13 & 14
	888-2126-10098PB	MPV II, SEAL KIT W/URETHANE SLEEVE, INCLUDES # (2)6, 8, 13 & 14
1	888-2125-00004PB	MPV, MPV II & MPV MINI, ROLL PIN
2	888-2126-04700PB	MPV II, KNOB (BLACK)
3	888-2126-22500PB	MPV II, BOLT (2 REQUIRED)
4	102-4420	AMV II & MPV II, FLAT WASHER
5	888-2126-29100PB	MPV II, TOP BODY W/ABRASIVE ADJUSTMENT INDICATOR LABEL
6	888-2126-06600PB	MPV II, "O"-RING (2 REQUIRED)
7	888-2125-00005PB	MPV, MPV II & MPV MINI, PLUNGER
8	888-2148-00006PB	APV, APV II, MPV, MPV II & MPV MINI, PLUNGER SEAL W/ "O"-RING (CLEAR URETHANE)
9	888-2126-07800PB	MPV II, ABRASIVE ADJUSTMENT INDICATOR LABEL
10	888-2126-30800PB	MPV II, ROLL PIN (3 REQUIRED)
11	888-2126-28900PB	MPV II, BODY
12	888-3014-206PB	APV II & MPV II, PLUG, PIPE STAINLESS 1"
13	888-2125-10008PB	MPV & MPV II, SLEEVE, URETHANE
14	888-2126-31300PB	MPV II, GASKET
15	888-2126-29300PB	MPV II, HALF RING CLAMP
16	888-2126-11800PB	MPV II, LOCK WASHER (2 REQUIRED)
17	888-2126-22600PB	MPV II, BOLT, HALF RING CLAMP (2 REQUIRED)
18	888-2126-00610PB	MPV II, PIPE NIPPLE, 1" FEMALE x 1-1/2" MALE
	888-2126-00710PB	MPV II, PIPE NIPPLE, 1-1/4" MALE x 1-1/2" MALE
	888-2126-00810PB	MPV II, PIPE NIPPLE, 1-1/2" MALE x 1-1/2" MALE

Copyright © 2022-2030 Pirate Brand®, All Rights Reserved

Valve Parts Lists

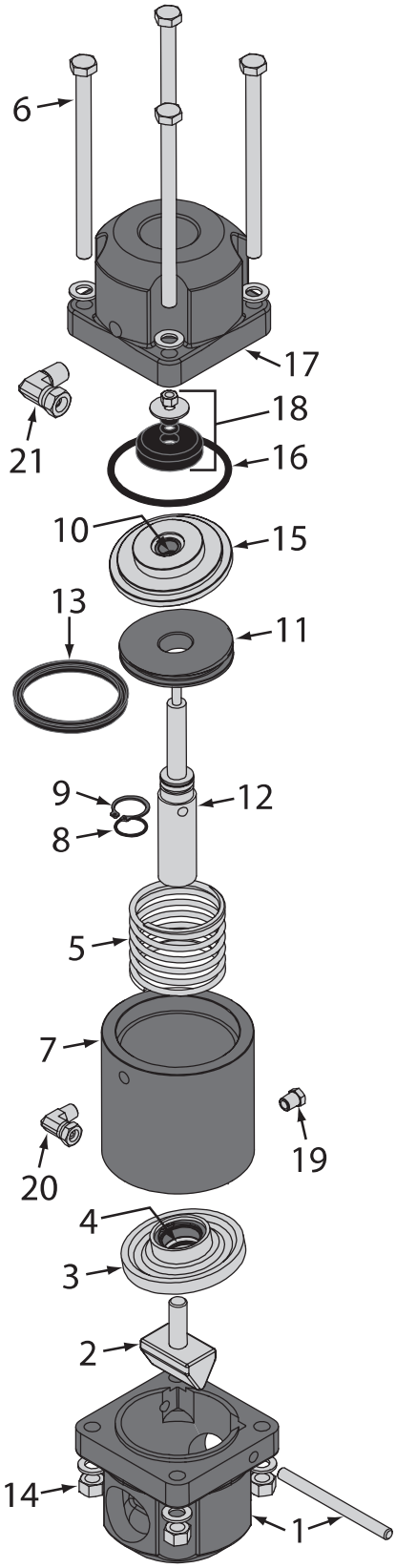

Combination Valve

	888-2223-000PB	VALVE, COMBINATION, 1-1/4", COMPLETE
	888-2223-00099PB	VALVE, COMBINATION & COMBINATION II, REPAIR KIT, INCLUDES # 4, 8, 9, 10, 13, 16 & 18
1	888-2223-00001PB	VALVE, COMBINATION, CAP
2	888-2223-00002PB	VALVE, COMBINATION & COMBINATION II, PINCH RAM
3	888-2223-00003PB	VALVE, COMBINATION, UPPER ROD GUIDE, INCLUDES SEAL(#4), BUSHING & CIRCLIP
4	888-2223-00004PB	VALVE, COMBINATION & COMBINATION II, SEAL, UPPER ROD
5	888-2223-00005PB	VALVE, COMBINATION & COMBINATION II, SPRING
6	888-7010-50715PB	VALVE, COMBINATION, BOLT 3/8" x 6" W/WASHER
7	888-2223-00007PB	VALVE, COMBINATION, CYLINDER
8	888-2223-00008PB	VALVE, COMBINATION & COMBINATION II, O-RING, SHAFT
9	888-2223-00009PB	VALVE, COMBINATION & COMBINATION II, SNAP RING
10	888-2223-00010PB	VALVE, COMBINATION & COMBINATION II, SEAL, LOWER ROD
11	888-2223-00011PB	VALVE, COMBINATION & COMBINATION II, PISTON
12	888-2223-00012PB	VALVE, COMBINATION & COMBINATION II, SHAFT
13	888-2223-00013PB	VALVE, COMBINATION & COMBINATION II, SEAL, PISTON
14	888-7017-50701PB	VALVE, COMBINATION, NUT, 3/8"
15	888-2223-00015PB	VALVE, COMBINATION & COMBINATION II, LOWER ROD GUIDE, INCLUDES SEAL(#10), BUSHING & SNAP RING
16	888-2223-00016PB	VALVE, COMBINATION & COMBINATION II, O-RING, LOWER ROD GUIDE
17	888-2223-00017PB	VALVE, COMBINATION, BASE
18	888-2223-00018PB	VALVE, COMBINATION & COMBINATION II, PLUG ASSEMBLY
19	888-2014-300PB	VENT, 1/8"
20	888-4203-50000PB	SWIVEL 90°, 1/8"MNPT X 1/8"F
21	888-4203-50202PB	SWIVEL 90°, 1/4"MNPT x 1/4"F

Copyright © 2022-2030 Pirate Brand®, All Rights Reserved

Valve Parts Lists

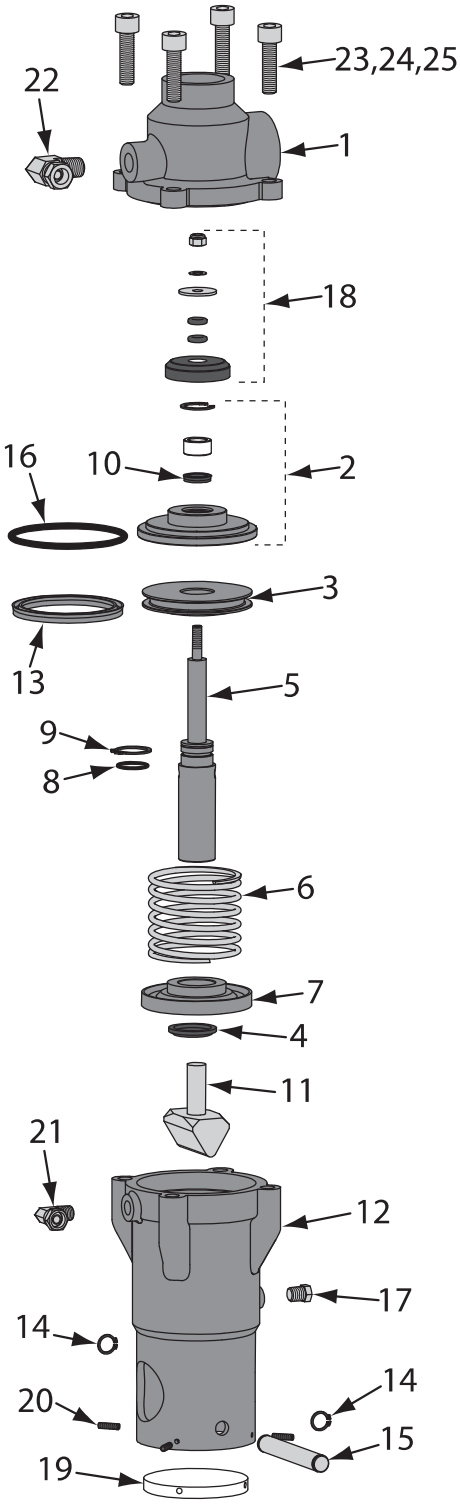

Combination Valve II

	888-2225-000PB	VALVE, COMBINATION II, 1-1/4", COMPLETE
	888-2225-001PB	VALVE, COMBINATION II, 1-1/2", **BIG-GUN™** COMPLETE
	888-2223-00099PB	VALVE, COMBINATION & COMBINATION II, REPAIR KIT, INCLUDES # 4, 8, 9, 10, 13, 16 & 18
1	888-2225-51100PB	VALVE, COMBINATION II, BASE, 1-1/4"
	888-2225-51101PB	VALVE, COMBINATION II, BASE, 1-1/2", **BIG-GUN™**
2	888-2223-00015PB	VALVE, COMBINATION & COMBINATION II, LOWER ROD GUIDE, INCLUDES SEAL(#10), BUSHING & SNAP RING
3	888-2223-00011PB	VALVE, COMBINATION & COMBINATION II, PISTON
4	888-2223-00004PB	VALVE, COMBINATION & COMBINATION II, SEAL, UPPER ROD
5	888-2223-00012PB	VALVE, COMBINATION & COMBINATION II, SHAFT
6	888-2223-00005PB	VALVE, COMBINATION & COMBINATION II, SPRING
7	888-2225-51500PB	VALVE, COMBINATION II, UPPER ROD GUIDE
8	888-2223-00008PB	VALVE, COMBINATION & COMBINATION II, O-RING, SHAFT
9	888-2223-00009PB	VALVE, COMBINATION & COMBINATION II, SNAP RING
10	888-2223-00010PB	VALVE, COMBINATION & COMBINATION II, SEAL, LOWER ROD
11	888-2223-00002PB	vALVE, COMBINATION & COMBINATION II, PINCH RAM
12	888-2225-51200PB	VALVE, COMBINATION II, CYLINDER
13	888-2223-00013PB	VALVE, COMBINATION & COMBINATION II, SEAL, PISTON
14	888-2225-34900PB	VALVE, COMBINATION II, EXTERNAL CLIP (2 REQUIRED)
15	888-2225-51400PB	VALVE, COMBINATION II, PIN
16	888-2223-00016PB	VALVE, COMBINATION & COMBINATION II, O-RING, LOWER ROD GUIDE
17	888-2014-300PB	VENT, 1/8"
18	888-2223-00018PB	VALVE, COMBINATION & COMBINATION II, PLUG ASSEMBLY
19	888-2225-51300PB	VALVE, COMBINATION II, COVER, CLEAR
20	888-2225-34700PB	VALVE, COMBINATION II, SCREW, COVER (4 REQUIRED)
21	888-4203-50000PB	SWIVEL 90*, 1/8"MNPT X 1/8"F
22	888-4203-50202PB	SWIVEL 90*, 1/4"MNPT x 1/4"F
23	888-2225-35800PB	VALVE, COMBINATION II, BOLT, BASE (4 REQUIRED)
24	888-2225-00170PB	VALVE, COMBINATION II, WASHER (4 REQUIRED)
25	888-2225-00160PB	VALVE, COMBINATION II, SPRING WASHER (4 REQUIRED)

Copyright © 2022-2030 Pirate Brand®, All Rights Reserved

Blasting Set-Up

Air Hose

10-034RED-050-1	3/4" AIR HOSE ASSEMBLY, 50'
10-100RED-025-1	1" AIR HOSE ASSEMBLY, 25'
10-100RED-050-1	1" AIR HOSE ASSEMBLY, 50'
10-112RED-025-1	1-1/2" AIR HOSE ASSEMBLY, 25'
10-112RED-050-1	1-1/2" AIR HOSE ASSEMBLY, 50'
27WT-1	SAFETY CABLE, 1/2" - 1", **HOSE TO EQUIP.**
27WC-1	SAFETY CABLE, 1/2" - 1", **HOSE TO HOSE**
27WT-2	SAFETY CABLE, 1-1/2" - 3", **HOSE TO EQUIP.**
27WC-2	SAFETY CABLE, 1-1/2" - 3", **HOSE TO HOSE**

Blast Hose, Twinline & Control Cord

10-034BLK-050-3AL	3/4" BLAST HOSE ASSEMBLY, 50' INCLUDES NOZZLE HOLDER
10-100BLK-050-3AL	1" BLAST HOSE ASSEMBLY, 50', INCLUDES NOZZLE HOLDER
10-114BLK-050-3AL	1-1/4" BLAST HOSE ASSEMBLY, 50', INCLUDES NOZZLE HOLDER
10-114BLK-050-3XAL	1-1/4" **BIG GUN** BLAST HOSE ASSEMBLY, 50', INCLUDES NOZZLE HOLDER
10-034BLK-050-4AL	3/4" EXTENSION BLAST HOSE ASSEMBLY, 50'
10-100BLK-050-4AL	1" EXTENSION BLAST HOSE ASSEMBLY, 50'
10-114BLK-050-4AL	1-1/4" EXTENSION BLAST HOSE ASSEMBLY, 50'
10-114BLK050-4XAL	1-1/4" **BIG GUN** EXTENSION BLAST HOSE ASSEMBLY, 50'
200-055	HOSE, **TWINLINE** CONTROL, ASSEMBLY, YEL/YEL W/BLACK STRIP, NOMINAL, 3/16" ID X 50' zz
888-7073-055PB	ELECTRICAL EXTENSION CONTROL CORD W/ **TWIST-LOCK CONNECTORS**, 55', 3 PRONG
888-7074-05501PB	ELECTRICAL EXTENSION CONTROL CORD W/ **SEALED WATERPROOF CONNECTORS**, 55'
27WT-1	SAFETY CABLE, 1/2" - 1", **HOSE TO EQUIP.**
27WC-1	SAFETY CABLE, 1/2" - 1", **HOSE TO HOSE**
27WC-15	SAFETY CABLE, 1" - 2-1/2", **HOSE TO HOSE**
27WT-2	SAFETY CABLE, 1-1/2" - 3", **HOSE TO EQUIP.**
27WC-2	SAFETY CABLE, 1-1/2" - 3", **HOSE TO HOSE**

Copyright © 2022-2030 Pirate Brand®, All Rights Reserved

Blasting Set-Up

Nozzles

1" ENTRY NOZZLES FOR USE WITH 3/4" BLAST HOSE	
1201-1172	#3 TUNGSTEN CARBIDE NOZZLE, ALL POLY
1201-1173	#4 TUNGSTEN CARBIDE NOZZLE, ALL POLY
1" ENTRY NOZZLES FOR USE WITH 1" BLAST HOSE	
1201-1173	#4 TUNGSTEN CARBIDE NOZZLE, ALL POLY
1201-1174	#5 TUNGSTEN CARBIDE NOZZLE, ALL POLY
1201-1175	#6 TUNGSTEN CARBIDE NOZZLE, ALL POLY
1-1/4" ENTRY NOZZLES FOR USE WITH 1-1/4" BLAST HOSE	
1348-555	#5 TUNGSTEN CARBIDE NOZZLE, BRASS THD
1348-556	#6 TUNGSTEN CARBIDE NOZZLE, BRASS THD
1348-557	#7 TUNGSTEN CARBIDE NOZZLE, BRASS THD
1348-558	#8 TUNGSTEN CARBIDE NOZZLE, BRASS THD

Breathing Equipment

NV3-702-50-PFC	RPB® NOVA 3® RESPIRATOR PACKAGE
407000-PFC	RPB® NOVA 2000™ RESPIRATOR PACKAGE
407800-PFC	RPB® ASTRO™ RESPIRATOR PACKAGE
03-501	RPB® C40 HOT/COLD CLIMATE CONTROL DEV.
407001	RPB® COOL TUBE W/BELT
407024	RPB® HOT TUBE W/BELT
08-400-01	RPB® GX4 CO / GAS MONITOR (120 VAC)
08-401-01	RPB® GX4 CO / GAS MONITOR (12 VDC)

GENVX-PKG-STD	BULLARD® GENVX® RESPIRATOR PACKAGE
88VX-PKG-STD	BULLARD® 88VX RESPIRATOR PACKAGE
CT30	BULLARD® CT30 COOL TUBE W/BELT
HCT30	BULLARD® HCT30 HOT/COLD TUBE W/BELT
COHP	BULLARD® CAB CO MONITOR

RESPIRATOR PACKAGES INCLUDE RESPIRATOR HELMET, 50' BREATHING AIR SUPPLY HOSE, AND AIRLINE FILTER

Air Dryers / After Coolers

DLAD-250-360	PORTABLE AIR DRYER, 250 CFM @ 100 PSIG, 360 CFM @ 150 PSIG
DLAD-450-575	PORTABLE AIR DRYER, 450 CFM @ 100 PSIG, 575 CFM @ 150 PSIG
DLAD-750-1130	PORTABLE AIR DRYER, 750 CFM @ 100 PSIG, 1130 CFM @ 150 PSIG
DLAD-900-1160	PORTABLE AIR DRYER, 900 CFM @ 100 PSIG, 1160 CFM @ 150 PSIG
DLAD-1600-2300	PORTABLE AIR DRYER, 1600 CFM @ 100 PSIG, 2300 CFM @ 150 PSIG
DLAC-250-360	PORTABLE AFTER COOLER, 250 CFM @ 100 PSIG, 360 CFM @ 150 PSIG
DLAC-450-575	PORTABLE AFTER COOLER, 450 CFM @ 100 PSIG, 575 CFM @ 150 PSIG
DLAC-750-1130	PORTABLE AFTER COOLER, 750 CFM @ 100 PSIG, 1130 CFM @ 150 PSIG
DLAC-900-1160	PORTABLE AFTER COOLER, 900 CFM @ 100 PSIG, 1160 CFM @ 150 PSIG
DLAC-1600-2300	PORTABLE AFTER COOLER, 1600 CFM @ 100 PSIG, 2300 CFM @ 150 PSIG

Blast Suits / Gloves

122-9140	BLAST SUIT, LIGHTWEIGHT, MEDIUM
122-9150	BLAST SUIT, LIGHTWEIGHT, LARGE
122-9160	BLAST SUIT, LIGHTWEIGHT, XL
122-9170	BLAST SUIT, LIGHTWEIGHT, XXL
122-9180	BLAST SUIT, LIGHTWEIGHT, XXXL
407701	DOUBLE PALMED LEATHER BLASTING GLOVES

Copyright © 2022-2030 Pirate Brand®, All Rights Reserved

Available Accessories

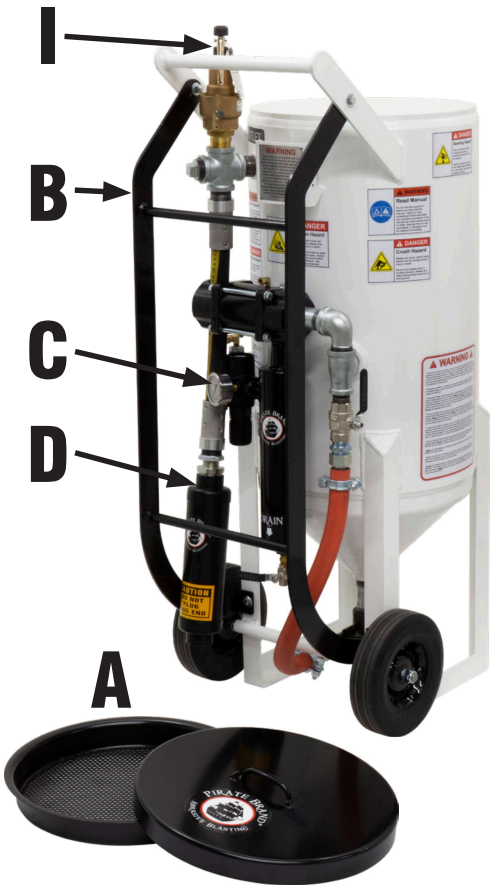

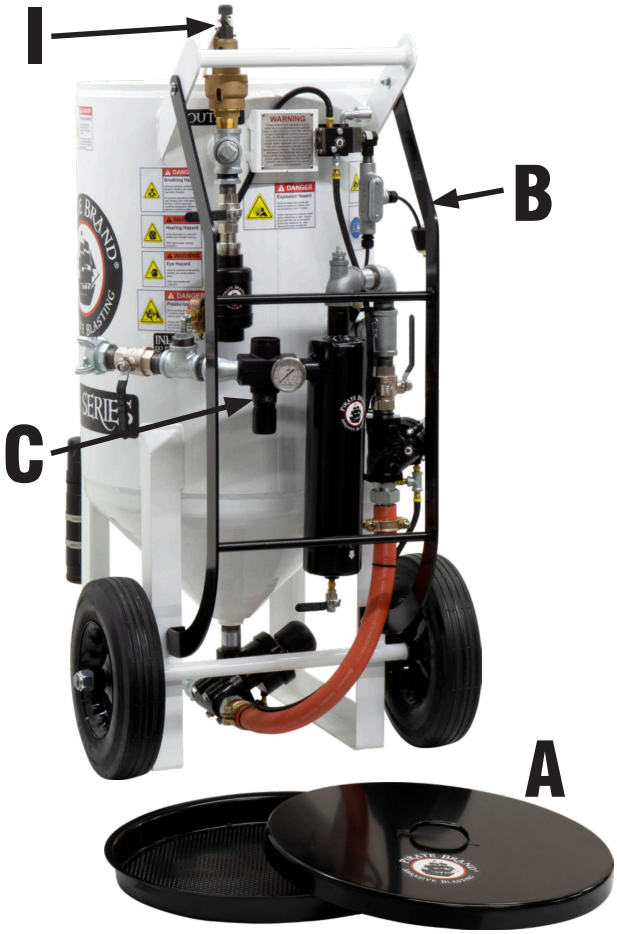

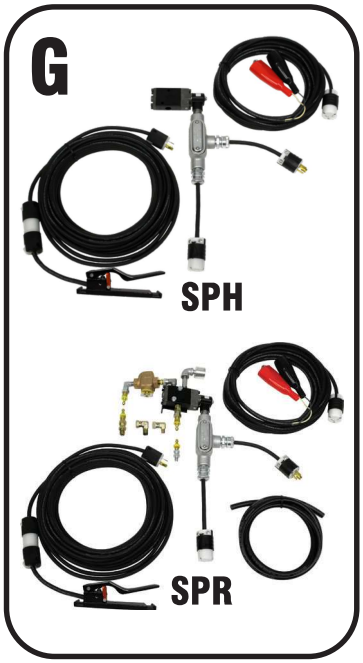

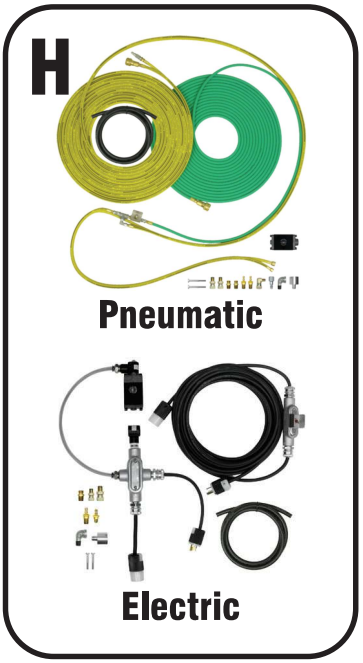

Copyright © 2022-2030 Pirate Brand®, All Rights Reserved

Available Accessories

A Lids and Screens

Lids are important for preventing moisture from falling into the abrasive blaster in outdoor applications. Moisture in the abrasive blaster can cause obstructions in the metering valve leading to costly down-time.

Screens are important for preventing foreign objects from falling into the abrasive blaster. Foreign objects in the abrasive blaster can cause obstructions in the metering valve leading to costly down-time.

888-5010-030PB	LID, 18" DIA, W/HANDLE, POWDER COATED (FOR 3.5 CU FT BLASTERS)
888-5011-030PB	SCREEN, LOW PROFILE, 18" (1/4" MESH), POWDER COATED BLACK (FOR 3.5 CU FT BLASTERS)
888-5011-031PB	SCREEN, FINE MESH, LOW PROFILE, 18" (3/32" MESH), POWDER COATED BLACK (FOR 3.5 CU FT BLASTERS)
888-5010-060PB	LID, 24" DIA, W/HANDLE, POWDER COATED (FOR 6.5 CU FT BLASTERS)
888-5011-060PB	SCREEN, LOW PROFILE, 24" (1/4" MESH), POWDER COATED BLACK (FOR 6.5 CU FT **PORTABLE** BLASTERS)
888-5011-062PB	SCREEN, FINE MESH, LOW PROFILE, 24" (3/32" MESH), POWDER COATED BLACK (FOR 6.5 CU FT **PORTABLE** BLASTERS)

B Loading Skids

Loading skids serve two important purposes. They allow for portable abrasive blasters to be easily loaded and transported on their back. They also protect the pipe string from damage.

888-7002-003PB	LOADING SKID / VALVE GUARD FOR 3.5 CU FT BLASTERS, POWDER COATED BLACK
888-7002-006PB	LOADING SKID / VALVE GUARD FOR 6.5 CU FT BLASTERS, POWDER COATED BLACK

C Regulator Kits

Adding a regulator kit to your abrasive blaster will allow you to blast at lower pressures to achieve custom finishes or help control profile.

888-2003-006PB-CI	1" REGULATOR KIT (CUSTOMER INSTALLED)
888-2003-007PB-CI	1-1/4" REGULATOR KIT (CUSTOMER INSTALLED)
888-2003-008PB-CI	1-1/2" REGULATOR KIT (CUSTOMER INSTALLED)
888-2003-00799PB	REPAIR KIT FOR 1", 1-1/4" & 1-1/2" REGULATORS
888-2000-007PB-CI	1-1/2" **BIG GUN** REGULATOR KIT (CUSTOMER INSTALLED)
888-2001-00199PB	REPAIR KIT, 1/4" PILOT REGULATOR (FOR **BIG GUN** REGULATOR)
888-2000-00399PB	REPAIR KIT, 1-1/2" & 2" **BIG GUN** REGULATORS

D SPR MUFFLER

Installing a blow-down muffler on your SPR Series abrasive blaster will reduce the noise generated during blow-down. It will also diffuse the blast of air released.

888-2011-006SPB-CI	PRESSURE RELEASE BLOWDOWN MUFFLER KIT, SHORT

E Job Timer

Keep track of the time spent on a job and total hours on your abrasive blaster. Know your cost, control your cost & set up a preventative maintenance program for your blast equipment.

PB-9805023P-01	DUAL TIMER CONTROL BOX W/KEY RESET & MOUNTING BRACKET

F Power Supply

Add a power supply to run any 12VDC electric blaster on common 120VAC outlet power. Powers up to 4 control valves at one time.

PB-SMP3WP	POWER SUPPLY 120VAC INPUT / 12VDC @ 2.5 AMP OUTPUT

G Electric Conversion Kits

Convert your existing pneumatically controlled S-Series abrasive blaster to electric controls. Electric remote controls are recommended if you run over 100 ft. of blast hose or when blasting in cold weather

888-0004-410PB	PNEUMATIC TO ELECTRIC CONVERSION KIT FOR **SPH** SERIES ABRASIVE BLASTERS
888-0005-410PB	PNEUMATIC TO ELECTRIC CONVERSION KIT FOR **SPR** SERIES ABRASIVE BLASTERS

H Abrasive Cut-Off Conv. Kits

Add an abrasive cut-off conversion kit to your SPH Series abrasive blaster allowing you to blow off your project with the same high velocity air you blast with.

888-2035-00101PB	55' ABRASIVE CUTOFF KIT, PNEUMATIC, PER OUTLET, (CUSTOMER INSTALLED)
888-2035-10101PB	55' ABRASIVE CUTOFF KIT, 12VDC ELECTRIC, (CUSTOMER INSTALLED)

I Relief Valve Kit

Adding this ASME relief valve kit to your blaster can prevent dangerous over-pressurization. Local codes may require a different valve.

888-2470-00702PB	150 PSI RELIEF VALVE KIT FOR SMALL S-SERIES ABRASIVE BLASTERS

Copyright © 2022-2030 Pirate Brand®, All Rights Reserved

Blasting Charts

Compressed Air, Power, & Abrasive Requirements

			NOZZLE PRESSURE							
NOZZLE # ORIFICE SIZE	NOZZLE AIR, POWER & ABRASIVE REQUIREMENTS		50 PSI (3.45 BAR)	60 PSI (4.14 BAR)	70 PSI (4.83 BAR)	80 PSI (5.52 BAR)	90 PSI (6.21 BAR)	100 PSI (6.89 BAR)	125 PSI (8.62 BAR)	140 PSI (9.65 BAR)
#2 1/8 inch (3.2 mm)	AIR	(cu ft/min)	12	13	15	18	19	21	26	
		(cu m/min)	0.34	.037	0.42	0.51	0.54	0.59	0.74	
	HORSEPOWER	(hp)	1.75	2	2.5	3	3.5	4	6	
		(kW)	1.30	1.49	1.86	2.24	2.61	2.98	4.47	
	ABRASIVE	(lb/hr)	70	80	90	100	110	120	135	
		(kg/hr)	32	36	41	45	50	54	61	
#3 3/16 inch (4.8 mm)	AIR	(cu ft/min)	25	30	35	40	43	45	60	
		(cu m/min)	0.71	0.85	0.99	1.13	1.22	1.27	1.70	
	HORSEPOWER	(hp)	5	8	9	9.5	10	10.5	16	
		(kW)	3.75	5.97	6.71	7.08	7.46	7.86	11.93	
	ABRASIVE	(lb/hr)	150	170	200	215	240	260	320	
		(kg/hr)	68	77	91	98	109	118	145	
#4 1/4 inch (6.35 mm)	AIR	(cu ft/min)	50	55	60	70	75	80	95	
		(cu m/min)	1.42	1.56	1.70	1.98	2.12	2.27	2.69	
	HORSEPOWER	(hp)	10	12	13	16	17	18	25	
		(kW)	7.46	8.95	9.69	11.93	12.68	13.42	18.64	
	ABRASIVE	(lb/hr)	270	300	350	400	450	500	675	
		(kg/hr)	122	136	159	181	204	227	306	
#5 5/16 inch (8 mm)	AIR	(cu ft/min)	80	90	100	115	125	140	190	230
		(cu m/min)	2.27	2.55	2.83	3.26	3.54	3.96	5.38	6.51
	HORSEPOWER	(hp)	17	20	25	27	28	30	36	60
		(kW)	12.68	14.91	18.64	20.13	20.88	22.37	26.85	44.85
	ABRASIVE	(lb/hr)	470	530	600	675	750	825	1000	1125
		(kg/hr)	213	240	272	306	340	374	454	510
#6 3/8 inch (9.5 mm)	AIR	(cu ft/min)	110	125	145	160	175	200	275	315
		(cu m/min)	3.12	3.54	4.11	4.53	4.96	5.66	7.79	8.91
	HORSEPOWER	(hp)	25	29	32	35	40	45	57	65
		(kW)	18.64	21.63	23.86	26.10	29.83	33.56	42.50	48.59
	ABRASIVE	(lb/hr)	675	775	875	975	1060	1100	1350	1840
		(kg/hr)	306	352	397	442	481	499	612	835
#7 7/16 inch (11.1 mm)	AIR	(cu ft/min)	150	170	200	215	240	255	315	405
		(cu m/min)	4.25	4.81	5.66	6.09	6.80	7.22	8.92	11.46
	HORSEPOWER	(hp)	35	40	45	50	55	60	70	90
		(kW)	26.10	29.83	33.56	37.28	41.01	44.74	52.20	67.28
	ABRASIVE	(lb/hr)	900	1000	1200	1300	1400	1510	1800	2540
		(kg/hr)	408	454	544	590	635	703	816	1152
#8 1/2 inch (12.7 mm)	AIR	(cu ft/min)	200	225	250	275	300	340	430	540
		(cu m/min)	5.66	6.37	7.08	7.79	8.50	9.63	12.18	15.28
	HORSEPOWER	(hp)	45	50	55	63	70	75	95	120
		(kW)	33.56	37.28	41.01	46.98	52.20	55.93	70.84	89.70
	ABRASIVE	(lb/hr)	1200	1350	1500	1700	1850	2025	2525	3240
		(kg/hr)	544	612	680	771	839	919	1145	1470
#10 5/8 inch (16 mm)	AIR	(cu ft/min)	300	350	400	450	500	550	700	880
		(cu m/min)	8.50	9.91	11.33	12.74	14.16	15.58	19.82	24.90
	HORSEPOWER	(hp)	70	80	90	100	110	120	150	190
		(kW)	52.20	59.66	67.11	74.57	82.03	89.48	111.85	142.02
	ABRASIVE	(lb/hr)	1900	2200	2400	2700	3000	3300	4000	5200
		(kg/hr)	862	998	1089	1225	1361	1497	1814	2359
#12 3/4 inch (19 mm)	AIR	(cu ft/min)	430	500	575	650	700	800	1100	1255
		(cu m/min)	12.18	14.16	16.28	18.41	19.82	22.66	31.15	35.52
	HORSEPOWER	(hp)	100	115	130	145	160	175	215	245
		(kW)	74.57	85.76	96.94	108.13	119.31	130.50	160.33	183.13
	ABRASIVE	(lb/hr)	2700	3100	3500	3900	4300	4700	5700	7375
		(kg/hr)	1225	1406	1588	1769	1950	2132	2586	3345

This table is to be used as reference only. Actual results may vary depending on specific abrasive medium used. This table is based on abrasive with a bulk density of 100 pounds per cubic foot.

Copyright © 2022-2030 Pirate Brand®, All Rights Reserved