POWERHORSE™

One or Two-Person Earth Auger Powerhead

Owner's Manual



⚠ WARNING: Read carefully and understand all ASSEMBLY AND OPERATION INSTRUCTIONS before operating. Failure to follow the safety rules and other basic safety precautions may result in serious personal injury.

Item# 6743809

READ & SAVE THESE INSTRUCTIONS

Thank you very much for choosing a Powerhorse product!

For future reference, please complete the owner's record below:

Serial Number/Lot Date Code (if applicable): _____

Purchase Date: _____

Save the receipt, warranty, and this manual. It is important that you read the entire manual to become familiar with this product before you begin using it.

This product is designed for certain applications only. Northern Tool and Equipment is not responsible for issues arising from modification or improper use of this product such as an application for which it was not designed. We strongly recommend that this product not be modified and/or used for any application other than that for which it was designed.

For technical questions, please call **1-800-222-5381**.

Table of Contents

Introduction 4
Features 4
Specifications 5
Warning and Safety Precautions 5-8
Assembly 9
Operation 9-10
Maintenance and Storage 11-13
Troubleshooting and Repair 14
Parts Breakdown 15-17
Warranty 18

Introduction

Congratulations on your investment in quality. Thank you for purchasing a Powerhorse Powerhead. We have worked to ensure that your powerhead meets the highest standards for usability and durability.

The Earth Auger Powerhead is a one-person high-performance auger powerhead featuring a 2-cycle, 50cc gas engine that gives you the power to drill fence posts, road signs, decks, tree planting and more! The powerful engine produces 55 ft.-lbs. of torque and 280 RPM to efficiently dig holes in a variety of soils. The powerhead is designed to fit shaft size of 7/8in.The powerhead has a maximum drilling capacity of 10 in. Meets current EPA emission standards. Powerhead with 8 inch auger bit.

Read this entire manual before installation and use. Powerhorse reserves the right to change, alter or improve the product and this document at any time without prior notice

FEDERAL EMISSION INFORMATION

Powerhorse warrants to the retail purchaser, that this small, off-road engine was designed, built and equipped to conform at the time of manufacture to all applicable regulations of the U.S. Environmental Protection Agency (EPA) when applicable.

Feature

NO.	NAME	NO.	NAME	NO.	NAME
1	Starter	2	Gearbox	3	Fuel tank
4	Engine cover	5	Handle	6	switch

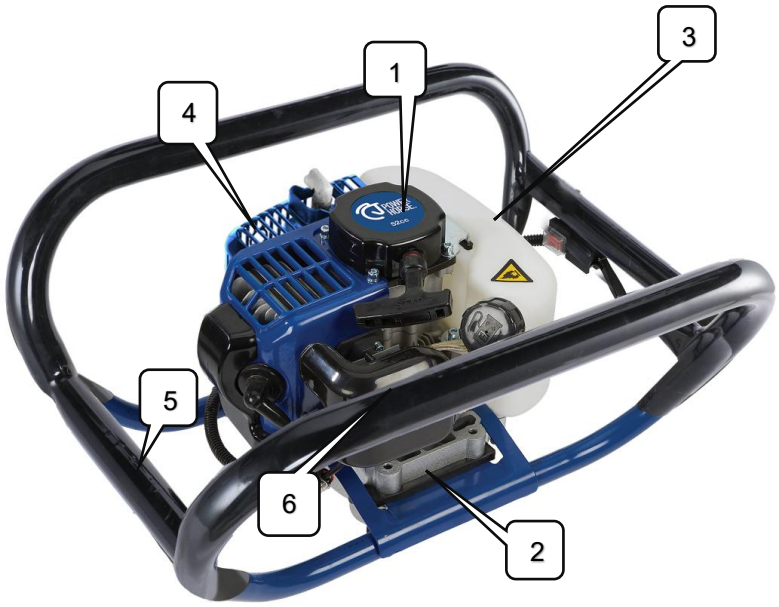

Specifications

Property	Specification
Engine type	1E43F-E, Single cylinder, air cooled, 2-stroke
Fuel	oil mixture (gasoline: stroke engine oil----30:1)
Displacement	50cc
Max. Power and speed	1.3kw/7000r/min
Max torque and speed	2.0Nm/5000r/min
Fuel tank capacity	1.1L
Fuel consumption rate	≤500g/kw.h
Max RPM	280 RPM

Warnings and Safety Precautions

OPERATOR'S RESPONSIBILITY

Accurate, safe and effective use of this product is the operator's responsibility.

•Read and follow all safety instructions.

•Maintain this machine according to directions and schedule included in this operator's manual.

•Ensure that anyone who uses the machine is familiar with and understands all controls and safety precautions.

SAFETY MESSAGES

•Your manual contains special messages to bring attention to potential safety concerns, machine damage as well as helpful operating and servicing information. Read all the information carefully to avoid injury and machine damage.

•**NOTE:** General information is given throughout the manual that may help the operator in the operation or service of the product.

• ⚠ This symbol points out important safety instruct tions which if not followed could endanger your personal safety.

⚠WARNING

•READ AND COMPLY WITH ENTIRE OPERATING AND MAINTENANCE INSTRUCTIONS FOR THIS MACHINE, IN ADDITIONAL TO ALL SAFETY INSTRUCTIONS. FAILURE TO FOLLOW AND/OR COMPLY WITH THESE INSTRUCTIONS COULD RESULT IN LOSS OF MACHINE CONTROL, SERIOUS PERSONAL INJURY OR DEATH TO YOU AND/OR BYSTANDERS, AND EQUIPMENT AND PROPERTY DAMAGE. OPERATE THE ENGINE ACCORD- ING TO THE SAFETY INSTRUCTIONS OUTLINED HERE AND INSERTED THROUGHOUT THE TEXT. ANYONE WHO USES THIS MACHINE MUST READ THE INSTRUCTIONS AND BE FAMILIAR WITH THE CONTROLS.

•WARNING INDICATES A HAZARD WHICH, IF NOT AVOIDED, COULD RESULT IN DEATH OR SERIOUS IN-JURY AND/OR PROPERTY DAMAGE.

•CALIFORNIA PROPOSITION 65 WARNING: ENGINE EXHAUST FROM THIS PRODUCT CONTAINS CHEMICALS KNOWN TO THE STATE OF CALIFORNIA TO CAUSE CANCER, BIRTH DEFECTS, OR OTHER RE-PRODUCTIVE HARM.

•CERTAIN COMPONENTS IN THIS MACHINE AND ITS RELATED ACCESSORIES CONTAIN CHEMICALS KNOWN TO THE STATE OF CALIFORNIA TO CAUSE CANCER, BIRTH DEFECTS, OR OTHER REPRODUCTIVE HARM.WASH HANDS AFTER HANDLING.

⚠Caution

CAUTION INDICATES YOU CAN BE HURT OR YOUR EQUIPMENT DAMAGED IF THE SAFETY INSTRUCTIONS THAT FOLLOW THIS SIGNAL WORD ARE NOT OBEYED.

⚠Important

INDICATES HELPFUL INFORMATION FOR PROPER ASSEMBLY, OPERATION, OR MAINTENANCE OF YOUREQUIPMENT.

GENERAL SAFETY RULES

• Read, understand, and follow all instructions on the machine and in the manual(s). Be thoroughly familiar with the controls and the proper use of the machine before starting.

•Use this equipment for its intended purpose only.

•Familiarize yourself with all of the safety and operating decals on this equipment and on any of its attachments or accessories.

• Do not put hands or feet near or under rotating parts.

• Only allow responsible individuals who are familiar with the instructions to operate the machine. Do not allow children to operate this machine. Do not allow adults to operate the machine without proper instruction.

• Thoroughly inspect the area where the machine is to be used and remove all foreign objects. Your equipment can propel small objects at high speed causing personal injury or property damage. Stay away from breakable objects such as house windows.

• Wear appropriate clothing such as a long-sleeved shirt or jacket. Also wear long trousers or slacks. Do not wear shorts. Never wear sandals, sneakers, or open shoes, and never operate the machine with bare feet.

• Do not wear loose clothing or jewelry. They can get caught in moving parts. Always keep hands, feet, hair and loose clothing away from any moving parts on engine and machine.

• Always wear safety goggles or safety glasses with side shields when operating the machine to protect your eyes from foreign objects which can be thrown from the unit. Always wear a protective hearing device.

Always wear work gloves and sturdy footwear. Wear footwear that will improve footing on slippery surfaces. Leather work shoes or short boots work well for most people. These will protect the operator’s ankles and shins from small sticks, splinters, and other debris.

• It is advisable to wear protective headgear to prevent the possibility of being struck by small flying particles, or being struck by low hanging branches, twigs, or other objects which may be unnoticed by the operator.

• Do not operate the machine without proper guards or other safety devices in place.

• See instructions for proper operation and installation of accessories.

• Operate only in daylight or good artificial light.

• Do not operate machine when fatigued or under the influence of alcohol, drugs or other medication which can cause drowsiness or affect your ability to operate this machine safely Never operate machine in wet grass. Always be sure of your footing; keep a firm hold on the handle and walk; never run.

• Watch for traffic when operating near, or when crossing roads.

• If the equipment should start to vibrate abnormally, stop the engine (motor), disconnect the spark plug wire and prevent it from touching the spark plug. Check immediately for cause. Vibration is generally a warning of trouble. If the noise or vibrations of the machine increase, stop immediately and perform an inspection.

Never leave the machine unattended when the engine is running.

• Regularly inspect the machine. Make sure parts are not bent, damaged or loose.

• Temperature of muffler and nearby areas may exceed 150° F (65° C). Allow muffler and engine areas to cool before touching. Never pick up or carry the machine while the engine is running.

• Prolonged exposure to noise and vibration from gasoline engine powered equipment should be avoided. Take intermittent breaks and/or wear ear protection from engine noise as well as heavy work gloves to reduce vibration in the hands.

• Keep all screws, nuts and bolts tight.

• Do not transport the machine from one place to another with the engine running.

• Check local regulations for age restrictions on use of this machine.

PRODUCT-SPECIFIC SAFETY RULES

• Do not drill above underground utilities, including water lines, gas lines, electric cables, or pipes. Do not operate the powerhead and earth auger in soil with large rocks and foreign objects which can damage the equipment.

• After striking a foreign object, stop the engine. Remove the wire from the spark plug. Inspect the powerhead and auger for damage. If damaged, repair before starting and operating the powerhead and auger.

• The auger should not rotate when the engine is idling. If it does rotate when engine is idling, contact Earthquake for instructions.

• If an object becomes lodged in the auger, turn the engine off, remove the wire from the spark plug and secure away from the spark plug; allow to cool before attempting to remove the foreign object.

• The earth blade is very sharp. Use extreme caution when drilling a hole or replacing the blade.

• Do not carry the earth auger unit between holes with the engine running

Gasoline Fires and Handling Fuel Safely

• Use extra care in handling gasoline and other fuels. They are flammable and vapors are explosive.

• When storing extra fuel be sure that it is in an appropriate container and away from any fire hazards.

• Prevent fire and explosion caused by static electric discharge. Use only nonmetal, portable fuel containers approved by the Underwriter’s Laboratory (U.L.) or the American Society for Testing & Materials (ASTM).

• Always fill fuel tank outside in a well-ventilated area. Never fill your fuel tank with fuel indoors. (Examples include basement, garage, barn, shed, etc.) Never fill tank near appliances with pilot lights, heaters, or other ignition sources.

• Never remove the fuel cap or add fuel with the engine running. Stop engine and allow to cool before filling.

• Do not smoke while refueling or operating engine.

• Never drain fuel from the engine in an enclosed area.

• Always wipe up excess (spilled) fuel from engine before starting. Clean up spilled fuel immediately. If fuel is spilled, do not start the engine but move machine and fuel container from area. Clean up spilled fuel and allow to evaporate and dry after wiping and before starting.

• Allow fuel fumes/vapors to escape from the area before starting engine.

• Test the fuel cap for proper installation before starting and using engine.

• Always run the engine with fuel cap properly installed on the engine. Do not store engine with fuel in the fuel tank indoors. Fuel and fuel vapors are highly explosive.

• During storage, keep machine so gas cap is up.

• Always have an adult fill the fuel tank and never allow children to fill the engine.

• Never allow an adult or anyone under the influence of drugs or alcohol to fill engine.

•When storing gasoline or equipment with fuel in the tank, store away from furnaces, stoves, water heaters or other appliances.

BURNS AND FIRES

The muffler, muffler guard and other parts of the engine become extremely hot during the operation of the engine. These parts remain extremely hot after the engine has stopped.

Prevention of Burns and Fires

• Never remove the muffler guard from the engine.

• Never touch the muffler guard because it is extremely hot and will cause severe burns.

• Never touch parts of the engine that become hot after operation.

• Always keep materials and debris away from muffler guard and other hot parts of the engine to avoid fires.

CHILDREN AND BYSTANDERS

• Tragic accidents can occur if the operator is not alert to the presence of children and/or bystanders. Never assume that others will remain where you last saw them.

• Keep the area of operation clear of all persons, especially small children and pets. Keep children under the watchful care of a responsible adult.

• Be alert and turn the machine off if children enter the area.

• Before and while moving backwards, look behind and down for small children.

• Never allow children to operate the machine

AUGER SAFETY RULES

• Carry powerhead and auger by handle bars only, NOT by auger.

• Keep all body extremities, loose clothing and foreign objects clear of rotating auger.

• Be sure auger is securely attached to powerhead during use.

• Never carry auger between holes with the engine running.

• This auger is not designed to be utilized as an anchoring device.

SERVICE

• Always stop the engine whenever you leave the machine, before cleaning, repairing or inspecting the unit. The engine should be turned off and cool, the spark plug wire must be removed from the spark plug before any repairs or adjustments are attempted. Never make adjustments or repairs with the engine (motor) running. Disconnect the spark plug wire and keep the wire away from the plug to prevent accidental starting. Remove the ignition key if equipped with an electric start.

• Keep all nuts and bolts tight and keep equipment in good condition.

• Never tamper with safety devices. Check their proper operation regularly.

• When servicing or repairing the machine, do not tip the machine over or up unless specifically instructed to do so in this manual. Service and repair procedures can be done with the machine in an upright position. Some procedures will be easier if the machine is lifted on a raised platform or working surface.

• Stop and inspect the equipment if you strike an object. Repair, if necessary, before restarting.

• Clean and replace safety and instruction decals as necessary.

• To guard against engine over-heating, always have engine debris filter mounted and clean.

• Inspect the machine before storage. When not in use, disconnect the spark plug lead and store indoors in a dry place locked or otherwise inaccessible to children.

Assembly

ASSEMBLY INSTRUCTIONS

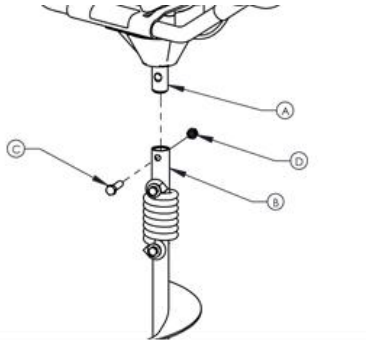

1. Insert the output shaft of the transmission (A) in the open end of the Flex Coil Shock Top (B).

2. Line up the bolt holes through the Flex Coil Shock Top and the output shaft of the transmission.

3. Place the included bolt (C) through the bolt hole.

4. Lock it with a nut(D).

Notes: auger bits sold separately.

Operation

GAS AND OIL QUALITY

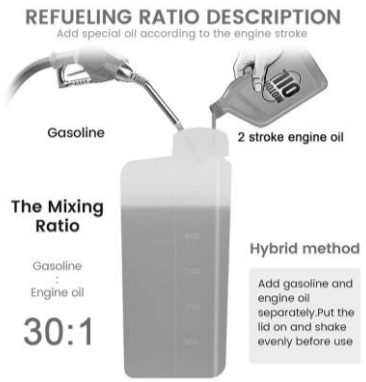

Use only high quality two-stroke engine oil, gasoline should contain less than 10% ethanol to avoid damage to the engine. Mixing ratio of 30:1 (gasoline: two-stroke engine oil)

MIXING FUEL

1. Fuel must be mixed in a container outside in a well-ventilated area.

2. Screw container cap on straight and tight.

3. Shake the container to mix fuel and oil.

4. Unscrew gas cap slowly to vent, add the remainder of fuel requirements.

5. Wipe away any spilled fuel or oil and allow to evaporate before moving or transporting.

FILLING FUEL TANK

1. Shut-off engine and allow engine to completely cool before refilling the fuel tank.

2. Move to a well-ventilated area, outdoors, away from flames and sparks.

3. Clean debris from area around the fuel cap.

4. Loosen fuel cap slowly. Place the cap on a clean, dry surface.

5. Carefully add fuel without spilling.

6. Do not fill fuel tank completely full; allow space for fuel to expand.

7. Immediately replace fuel cap and tighten. Wipe off spilled fuel and allow to dry before starting engine.

⚠Important

THIS ENGINE USES A GAS/OIL MIXTURE. DO NOT RUN ON STRAIGHT GAS ONLY. THIS WILL VOID THE WARRANTY AND ENGINE DAMAGE WILL RESULT.

STARTING AND STOPPING ENGINE

• Move engine to a well-ventilated area, outdoors, to prevent carbon monoxide poisoning.

• Move to an area away from flames or sparks, to avoid ignition of vapors if present.

• Remove all debris from air cleaner holes and gas cap to ensure proper air flow.

COLD ENGINE START

Starting engine for first time or after engine has cooled off or after running out of fuel.

1. Move choke lever to **CHOKE** position.

NOTE: CHOKE position is defined by moving the choke lever as far to the CHOKE position as possible.

2. Prime unit until primer hose is filled with gas.

NOTE: When using the primer bulb, allow the bulb to return completely to its original position between pushes.

4. Push **ON/OFF** switch to the **ON** position.

5. Hold handle bar firmly. Grasp starter handle and pull out slowly, until it pulls slightly harder. Without letting starter handle retract, pull rope with a rapid full arm stroke. Let it return to its original position very slowly until unit fires or runs. Repeat this step every time the starter rope is pulled.

NOTE: If engine fails to start after 5-6 pulls, push primer 1 time and pull starter rope again.

6. Once running, move choke lever to **HALF CHOKE** position until unit runs smoothly.

NOTE: HALF CHOKE is defined when the choke lever is between CHOKE and RUN.

7. Move choke lever to **RUN** position and move throttle to desired speed.

NOTE: Run at full throttle when possible. Do not let unit idle for extended periods of time.

8. To stop engine, push **ON/OFF** switch to **OFF** position.

WARM ENGINE START

1. Move choke lever to **CHOKE** position.

NOTE: CHOKE position is defined by moving the choke lever as far to the CHOKE position as possible.

2. Continue with Step 4 of Cold Engine Starting.

HOT ENGINE START:

1. Begin with Step 4 of Cold Engine Starting.

2. If engine does not fire, refer to Step 1 of Warm Engine Starting.

DO NOT attempt to start engine in the following ways:

• By using starting fluid.

• Spraying flammable liquids or vapors into air cleaner, carburetor or spark plug chamber.

• Removing spark plug and pull on starter rope. Flammable fuel can spray out and ignite from a spark from spark plug.

TO STOP ENGINE:

Push the **ON/OFF** switch to the **OFF** position

⚠CAUTION

MAKE SURE THE UNIT IS IN A STABLE POSITION BEFORE PULLING THE STARTER HANDLE. ALWAYS HANDLE FUEL IN A WELL-VENTILATED AREA, OUTDOORS, AWAY FROM FLAMES OR SPARKS. ALWAYS WEAR A PROTECTIVE HEARING DEVICE. DO NOT START ENGINE IF FUEL IS SPILLED. WIPE OFF EXCESS FUEL AND ALLOW TO DRY. REMOVE ENGINE FROM AREA TO AVOID SPARKS. IF AUGER IS MOUNTED TO ENGINE, ALL SAFETY GUARDS MUST BE SECURELY ON TO AVOID SERIOUS INJURY. STARTER ROPE CAN CAUSE AN UNANTICIPATED JERK TOWARDS ENGINE. FOLLOW INSTRUCTIONS TO AVOID INJURY. NEVER LEAVE ENGINE RUNNING WHILE UNATTENDED. TURN OFF AFTER EVERY USE. NEVER CARRY POWERHEAD AND AUGER BETWEEN HOLES WHILE ENGINE IS RUNNING.

Maintenance and Storage

STEPS FOR WORKING ON EQUIPMENT

1. Turn off engine switch.

2. Disconnect the spark plug wire from the spark plug.

3. Securely place the disconnected spark plug wire away from the spark plug and any metal parts. This must always be done, or arcing may occur between spark plug wire and metal parts.

4. Replace or repair the part on the powerhead.

5. Check all parts that were repaired, or removed during repair, that they are secure and fit correctly.

NOTE: All repair parts must come from the factory. Never replace parts that are not specifically designed for the powerhead.

6. Reconnect the spark plug wire.

POWER AUGER MAINTENANCE

1.The gear case has 4 oz. of grease installed at the factory. It is recommended that once a year the gear case be split and the grease level checked. Add grease only if level of grease is below top of the gears. DO NOT OVERFILL. Replacement grease is available online per parts breakdown.

2. Keep all screws, nuts, and bolts tight.

3. For cold weather operation, store the unit in a cool environment. Transferring the unit from a warm to a cold place can cause the buildup of harmful condensation.

4. If auger performance decreases, carefully inspect cutting edge of blade for any signs of wear. If blades show any of these signs, they will need to be replaced.

MAINTENANCE SCHEDULE

MAINTENANCE ITEM		Every 8 hours (daily)	Every 20 hours or seasonally	Yearly
Clean Engine and Check Bolts & Nut		X		
Air Filter	Check	X		
(See Air Filter section)	Clean *		X	
	Replace			X
Spark Plug (Gap .028")	Check/ Adjust		X	
(See Spark Plug section)	Replace			X

ENGINE MAINTENANCE

Read the maintenance schedule and observe these recommendations to extend the life of your engine.

Good maintenance is essential for safe, economical, and trouble-free operation. It will also help reduce air pollution. To help you properly care for your engine, the following pages include a maintenance schedule, routine inspection procedures, and simple maintenance procedures using basic hand tools. Other service tasks that are more difficult, or require special tools, are best handled by professionals and are normally performed by a technician or other qualified mechanic.

Maintenance, replacement or repair of the emissions control devices and systems may be performed by any non-road engine repair establishment or individuals. However, items must be serviced by an authorized dealer to obtain, "no charge" emissions control service.

The maintenance schedule applies to normal operating conditions. If you operate your engine under unusual conditions, such as sustained high-load or high-temperature operation, or use in unusually wet or dusty conditions, consult your servicing dealer for recommendations applicable to your individual needs and use.

⚠CAUTION

TO PREVENT ACCIDENTAL STARTING: ENGINE MUST BE TURNED OFF AND COOL, AND SPARK PLUG WIRE MUST BE REMOVED FROM SPARK PLUG BEFORE CHECKING AND ADJUSTING ENGINE OR EQUIPMENT. TEMPERATURE OF MUFFLER AND NEARBY AREAS MAY EXCEED 150º F. (65º C). AVOID THESE AREAS. CHECK AUGER OFTEN FOR LOOSE NUTS AND BOLTS. KEEP THESE ITEMS TIGHTENED. NEVER STORE ENGINE WITH FUEL IN THE TANK INSIDE A BUILDING. POTENTIAL SPARKS MAY BE PRESENT FOR IGNITION OF FUEL AND FUEL VAPORS. ANY MAINTENANCE AND REPAIR ON THE ENGINE AND AUGER MUST ALWAYS BE DONE BY AN ADULT. ENGINE MUST BE SHUT-OFF, COOL, AND SPARK PLUG WIRE REMOVED BEFORE ANY REPAIR OR MAINTENANCE CAN BE DONE.

COOLING FINS

Cooling fins, air inlets and linkages must be free from any debris before each use.

AIR FILTER

Never run engine without air cleaner properly installed. Added wear and engine failure may occur if air cleaner is not installed on engine. Service air cleaner every 3 months or after 20 hours of operation. Clean filter daily in extremely dusty conditions.

STEPS FOR CLEANING BLOCK STYLE FOAM AIR FILTER

1. Before removing the air filter cover, move the choke lever to the choke position. SEE FIGURE 2.

2. To remove air filter cover, squeeze the latch tabs on both sides of the cover. SEE FIGURE 3.

3. Once the latch tabs are released, remove the air filter cover by rotating the cover away from the engine. SEE FIGURE 4.

4. Remove the foam filter element (SEE FIGURE 5) and replace with a new oiled filter or clean the original foam filter with warm water and mild soap by following the previous steps for Cleaning Air Filter. Remember to thoroughly oil the foam filter with 30 or 40 weight motor oil and squeeze out any excess oil.

5. Reinstall the foam filter, pressing it in place to ensure that the foam is fully seated into its sealed position. SEE FIGURE 6.

6. Replace the air filter cover so that it fully snaps into place and is secured by the latch tabs. Check that the cover is securely attached by pulling slightly on the cover. If the cover doesn't move when pulled, it is secure.

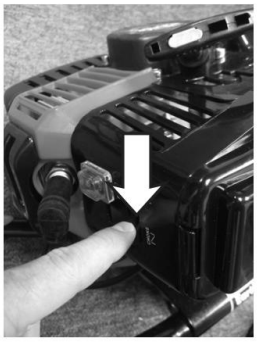

Figure 2



Figure 3



Figure 4

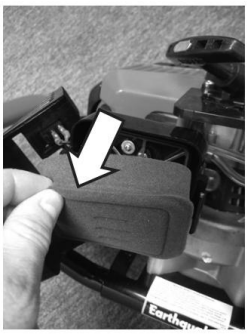

Figure 5

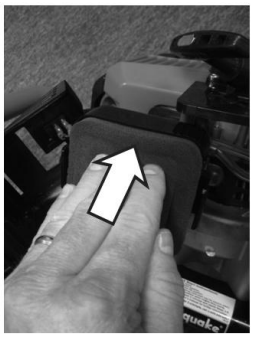

Figure 6

SPARK PLUG

See parts breakdown for recommended spark plug.

1. Check spark plug at the beginning of each season. Disconnect the spark plug cap and clean any debris from around the spark plug area.

3. Remove spark plug and replace if any of the following occur; pitted electrodes, burned electrodes, cracked porcelain, or deposits around electrodes.

4. After analysis, seat spark plug and tighten with spark plug wrench.

• Reinstall original spark plug, tighten additional 1/2 turn.

• Installing new spark plug, adjust spark plug gap to .028” and tighten additional 1/8 – 1/4 turn.

NOTE: Loose spark plug may overheat and damage engine. Over tightened spark plug may damage threads in the cylinder head.

CARBURETOR: Never tamper with factory setting of the carburetor.

TRANSPORTING YOUR EARTH AUGER

1. Never transport engine inside an enclosed space or vehicle. Fuel or fuel vapors may ignite causing serious injury or death.

2. If fuel is present in the fuel tank, transport in an open vehicle in an upright position.

3. If an enclosed vehicle must be used, remove gas into an approved red fuel container. DO NOT siphon by mouth.

4. Run engine to use up the fuel in the carburetor and fuel tank. Always run engine in a well-ventilated area.

5. Wipe away any spilled fuel from engine and earth auger. Allow to dry.

LONG-TERM STORAGE (30 DAYS OR MORE WITHOUT USE)

If your earth auger will not be used for more than one month, prepare it for long term storage.

STEPS FOR LONG-TERM STORAGE

1. Add fuel stabilizer according to manufacturer’s instructions.

2. Run engine for 10-15 minutes to ensure that the stabilizer reaches the carburetor.

3. Remove the remainder of the fuel from the gas tank into an approved fuel container.

4. Remove auger from powerhead and apply a thin layer of grease to the output shaft of the transmission.

5. Store auger and powerhead (engine) in a vertical position.

6. Remove all debris from auger and powerhead (engine).

TROUBLESHOOTING AND REPAIR

We build quality and durability into the design of our products; but no amount of careful design by us, and careful maintenance by you, can guarantee a repair-free life for your powerhead. Most repairs will be minor, and easily fixed by following the suggestions in the troubleshooting guide in this manual.

The troubleshooting guide will help you pinpoint the causes of common problems and identify remedies.

⚠CAUTION

TO AVOID INJURY OR DEATH, NEVER SIPHON FUEL BY MOUTH.

NEVER STORE EARTH AUGER WITH FUEL IN THE GAS TANK INSIDE AN ENCLOSED AREA OR BUILDING.

TO PREVENT ACCIDENTAL STARTING: ENGINE MUST BE TURNED OFF AND COOL, AND SPARK PLUG WIRE MUST BE REMOVED FROM SPARK PLUG BEFORE CHECKING AND ADJUSTING ENGINE OR EQUIPMENT. MAINTENANCE AND REPAIR ON THE ENGINE AND AUGER MUST ALWAYS BE DONE BY AN ADULT. ENGINE MUST BE SHUT-OFF, COOL, AND SPARK PLUG WIRE REMOVED BEFORE ANY REPAIR OR MAINTENANCE CAN BE DONE.

Troubleshooting and Repair

Failure	Possible Cause	Corrective Action
Engine is unable to start	1. Power switch off	1. Flip switch to ON position
	2. Spark plug wire disconnected	2. Connect spark plug wire to spark plug
	3. Out of fuel	3. Refuel
	4. Spark plug wet, faulty or improperly gapped	4. Clean, replace or gap spark plug
	5. Fuel line hose not positioned in bottom of gas tank	5. Push fuel line down into fuel in gas tank
	6. Stale fuel	6. Drain old fuel and replace with fresh. Use fuel stabilizer for future preventative measures.
Engine runs rough, floods during operation	1. Dirty air filter	1. Clean or replace air filter
	2. Choke partially engaged	2. Turn off choke
	3. Carburetor out of adjustment	3. Call factory or take to authorized repair center
Engine is hard to start	1. Stale fuel	1. Drain old fuel and replace with fresh. Use gas stabilizer for future preventative measures.
	2. Spark plug wire loose	2. Make sure spark wire is securely attached to spark plug
	3. Dirty carburetor	3. Clean carburetor, use gas stabilizer, new gas can, or purchase carburetor replacement or repair kit per parts breakdown
	4. Carburetor not primed	4. Prime unit 3 more times, squeeze throttle when pulling recoil handle
Engine misses or lacks power	1. Clogged gas tank	1. Remove and clean
	2. Clogged air filter	2. Clean or replace
	3. Carburetor out of adjustment or bad	3. Call factory or take to authorized repair center
	4. Spark plug wet, faulty or improperly gapped	4. Clean, replace or gap spark plug
Engine runs, then quits	1. Gas cap not venting	1. Unscrew the gas cap and then re-tighten gas cap
	2. Plugged fuel filter	2. Clean or replace
	3. Carburetor out of adjustment or bad	3. Call factory or take to authorized repair center
Engine revs too high	1. Carburetor out of adjustment or air leak in the intake	1. Call factory or take to authorized repair center
Auger turns at idle	1. Idle speed too high	1. Adjust idle speed lower
	2. Broken clutch spring	2. Replace spring
Auger turns, but has no power	1. Choke on	1. Turn off choke after engine is running
	2. Carburetor out of adjustment	2. Call factory or take to authorized repair center
	3. Broken transmission	3. Call factory or take to authorized repair center
	4. Worn clutch shoes	4. Replace clutch shoes and spring
Auger jumps	1. Blade damaged	1. Replace with new blade
Auger cuts slowly	1. Dull blade	1. Replace with new blade
	2. Damaged fishtail point	2. Replace fishtail point

Parts Breakdown

Quality engine parts explosion

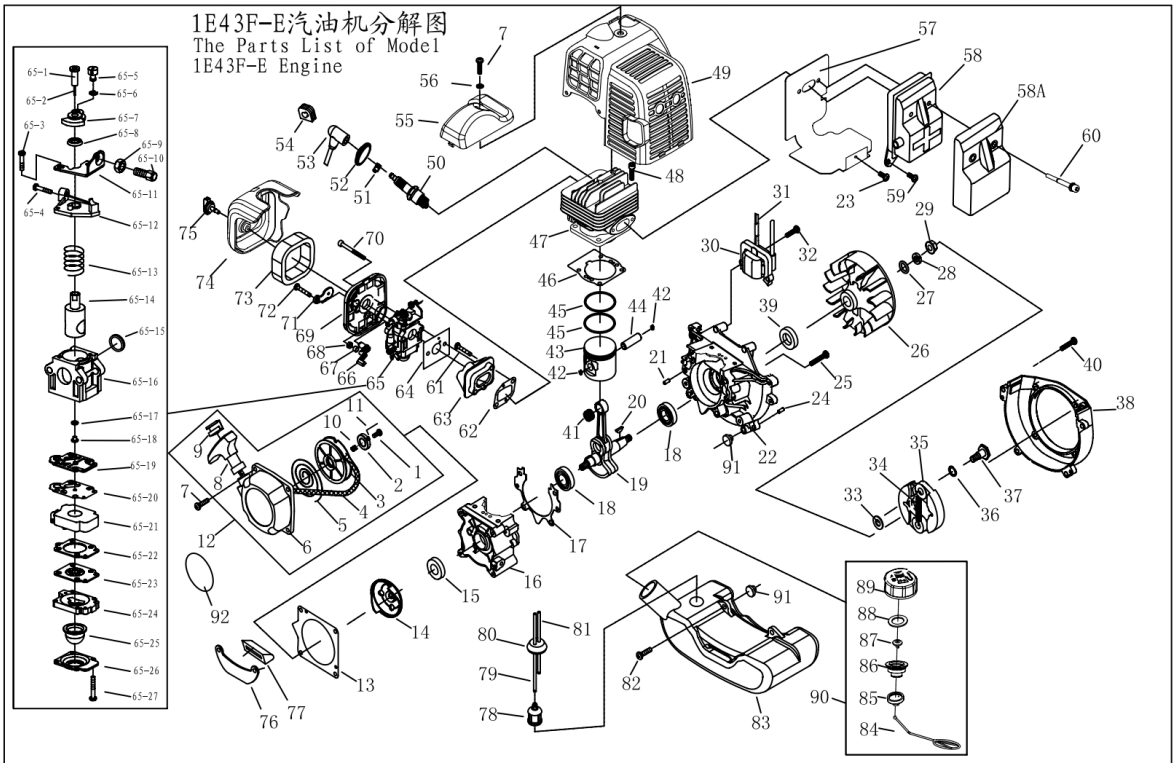

序号 NO.	代 号 Part No.	名 称 Part Name	数量 Qty.	序号 NO.	代 号 Part No.	名 称 Part Name	数量 Qty.	序号 NO.	代 号 Part No.	名 称 Part Name	数量 Qty.	序号 NO.	代 号 Part No.	名 称 Part Name	数量 Qty.
1	1E36FE.9-3	螺钉 Screw	1	32	GB70+GB93+GB97	螺钉组合件 M5×20 Bolt M5×20	2	62	1E44F-2AD-5	进气管垫 Gasket	1	66	1E34F.1-2	阻风门手柄 Choker Handle	1
2	1E36FE.9-4	起动轮 Ratchet	1	33	1E36F-3	垫圈B WasherB	2	63	1E40F-5A.2A	进气管 Admitting Pipe	1	67	1E34F.1-7	止逆塞 Stop ring	1
3	1E36FE.9-1	绳轮 Starter Rope Reel	1	34	1E36F-E.6B-1	拉簧 Spring	1	64	1E40-5A-1	化油器垫 Gasket	1	68	GB/T6170	螺母 M4 Nut M4	1
4	1E36FE.9-5	起动拉绳 Starter Rope	1	35	1E36F-E.6B	涨紧块 Expander	2	65	1E40F-2E.1A	化油器 Carburetor	1	69	1E34F.1.1	空滤器内罩 Cleaner inside cover	1
5	1E36FE.9-7	起动器平簧 Recoil Spring	1	36	1E40F-5-11	波形垫圈 Washer	2	65-1		主量针套 Thimble	1	70	GB70.1+GB97	螺钉组合 M5X50 Screw M5x50	2
6	1E36FE.9-8	壳体 Starter Cover Ass'y	1	37	P40-18	螺钉轴 Screw Pin	2	65-2		主量针 Main Needle	1	71	1E34F.1-3	阻风门 Choker	1
7	GB9074.4	螺钉组合件 M5×20 Screw M5×20	5	38	1E40F-5-9	磁电机罩壳 Fan Cover	1	65-3		油门调节螺钉 Screw	1	72	GB/T845	自攻螺钉 ST4.2X12 Screw ST4.2X12	1
8	1E40FP-3Z.4-2	起动器手把 Start Handle	1	39	1E40F-5.9	大油封 Oil-seal	1	65-4	GB/T823	螺钉 M3×10 Screw M3×10	2	73	1E34F.1-1	滤芯 Filter Net	1
9	1E40FP-3Z.4-10	增强套 Ring	1	40	GB70+GB93+GB97	螺钉组合件M5×25 Screw M5×25	2	65-5		挂线轴 Swivel	1	74	1E36F-E.7-1	空滤器外罩 Cleaner Outside Cover	1
10	1E36FE.9-6	压簧 Spring	1	41	1E44F-2A.2-3	小头滚针轴承 Bearing	1	65-6	GB896	开口当圈 3.5 Ring 3.5	1	75	1E34F.1.2	大头螺钉 Screw	1
11	1E36FE.9-2	起动拨杆 Start pole	2	42	P40.6-4	活塞销挡环 Ring	2	65-7		旋 架 Turn Frame	1	76	1E36F-E-5	油箱挂架 Stand	1
12	1E36FE.9	起动器 Starter	1	43	1E43F-E.1-1	活塞 Piston	1	65-8		密封圈 Airproof Ring	1	77	1E40F-5A-2	橡胶套 Rubber Cover	1
13	1E40F-5-10	起动器垫 Gasket	1	44	1E44F-2A.2-2	活塞销 Piston Pin	1	65-9	GB/T6172	螺母 M6 Nut M6	1	78	P40.12.2-3A	燃油过滤器 Cleaner Cover	1
14	1E36FE.7	起动拔盘焊合 Start Reel	1	45	1E43FD.1-2	活塞环 Piston Ring	2	65-10		挂线调节螺帽 Nut,Adjuster	1	79	CG420.1.3.2-2	橡胶管 Fuel Pipe	1
15	1E36F.2	小油封 Oil-seal	1	46	1E43F-E-2	缸垫 Gasket	1	65-11		上压板 Bracket	1	80	EB-415.4.2-2	油管胶塞 Plug	1
16	1E40F-E.6-2	后半曲轴箱 Crank Case	1	47	1E43F-E-1	缸体 Cylinder	1	65-12		固定板 Fixed Board	1	81	EB-415.4.2-4	橡胶管 Fuel Pipe	1
17	1E40F-5.8-4	曲轴箱密封垫 Gasket	1	48	GB70+GB93+GB97	螺钉组合件 M5×20 Screw M5×20	4	65-13		扭 簧 Spring	1	82	GB70.1+GB93+GB96	螺钉组合件M5x16 Screw M5×16	2
18	GB/T276	轴承 6202/P6 Bearing 6202/P6	2	49	1E40F-E.5	缸体护罩组合 Guide Cover Ass'y	1	65-14		柱 塞 Column	1	83	1E40F-HS.5.1	油箱 Fuel Tank	1
19	1E40F-E.4.1A	曲轴连杆组 Crank Shaft	1	50	L8RTC	火花塞 Spark Plug	1	65-15		密封垫 Ring	1	84	1E32FL.6.2-4	防脱链 Chain	1
20	GB1099	半圆键 3×5×13 Key 3x5x13	1	51	1E40F-3A.8-2	火花塞卡簧 Spring	1	65-16		上本体 OverBody	1	85	1E32FL.6.2-3	端盖 End Cover	1
21	GB119	销 4h8×10 Pin 4h8×10	2	52	1E34F.5-3	火花塞罩 Plug Cap	1	65-17		O形圈 O Ring	1	86	1E32FL.6.2-2	油箱内盖 Inside Cover	1
22	1E40F-E.6-1	前半曲轴箱 Crank Case	1	53	1E34F.5-2	高压帽 Cap	1	65-18		主量孔 Pinhole	1	87	EB-415.4.1.1-1	进气嘴 Inlet	1
23	GB70+GB93+GB97	螺钉组合件M4×12 Screw M4×12	1	54	1E40F-5.3-1	胶塞 Plug	1	65-19		中体密封片 Gasket,Pump	1	88	CG420.1.3.1-2	密封垫 Gasket	1
24	GB119	销 4h8×10 Pin 4h8×10	2	55	1E40F-E-4	上压盖 Cover	1	65-20		中体膜片 Diaphagm,Pump	1	89	1E32FL.6.2-1	油箱盖 Fuel Tank Lid	1
25	GB/T70.1	内六角螺钉 M5×30 Screw M5×30	4	56	1E36F-2C-1	隔热垫（二） Gasket	1	65-21		中体部件 Mid-body	1	90	1E32FL.6.2	油箱盖组合 Lid Ass'y	1
26	HA46.2.1.1	磁电机转子 MAGNETO ROTOR COMP.	1	57	1E40F-E-2	消音器垫 Gasket	1	65-22		下体密封片 Gasket Diaphagm	1	91	1E40F-5A-3	橡胶垫 Rubber washer	2
27	GB/T859	垫圈B WasherB	1	58	1E40F-2E.2	消音器组 Muffler	1	65-23		吸油膜片部件 Diaphagm	1	92	1E36F-2-10	标签 Label	1
28	GB/T97.1	垫圈B WasherB	1	58A	1E40F-E-6	隔热罩 Cover	1	65-24		下体部件 Body Purge	1				
29	GB6170	螺母 M8 Nut M8	1	59	GB70+GB93+GB97	螺钉组合件M5×12 Screw M5×12	2	65-25		油 杯 Pump Priming	1				
30	1E40F-E.3.1-2	磁电机定子 IGNITION COIL COMP.	1	60	GB70+GB97	螺钉组合件M6×60-12.9 Screw M6×60-12.9	2	65-26		下压板 Cover Pump	1				
31	1E36F-2.3.1	停车线组 Cord Comp.	1	61	GB70+GB93+GB97	螺钉组合件M5×25 Screw M5×25	4	65-27	GB/T818	螺钉 M3×22 Screw M3×22	4				

Powerhead explosion

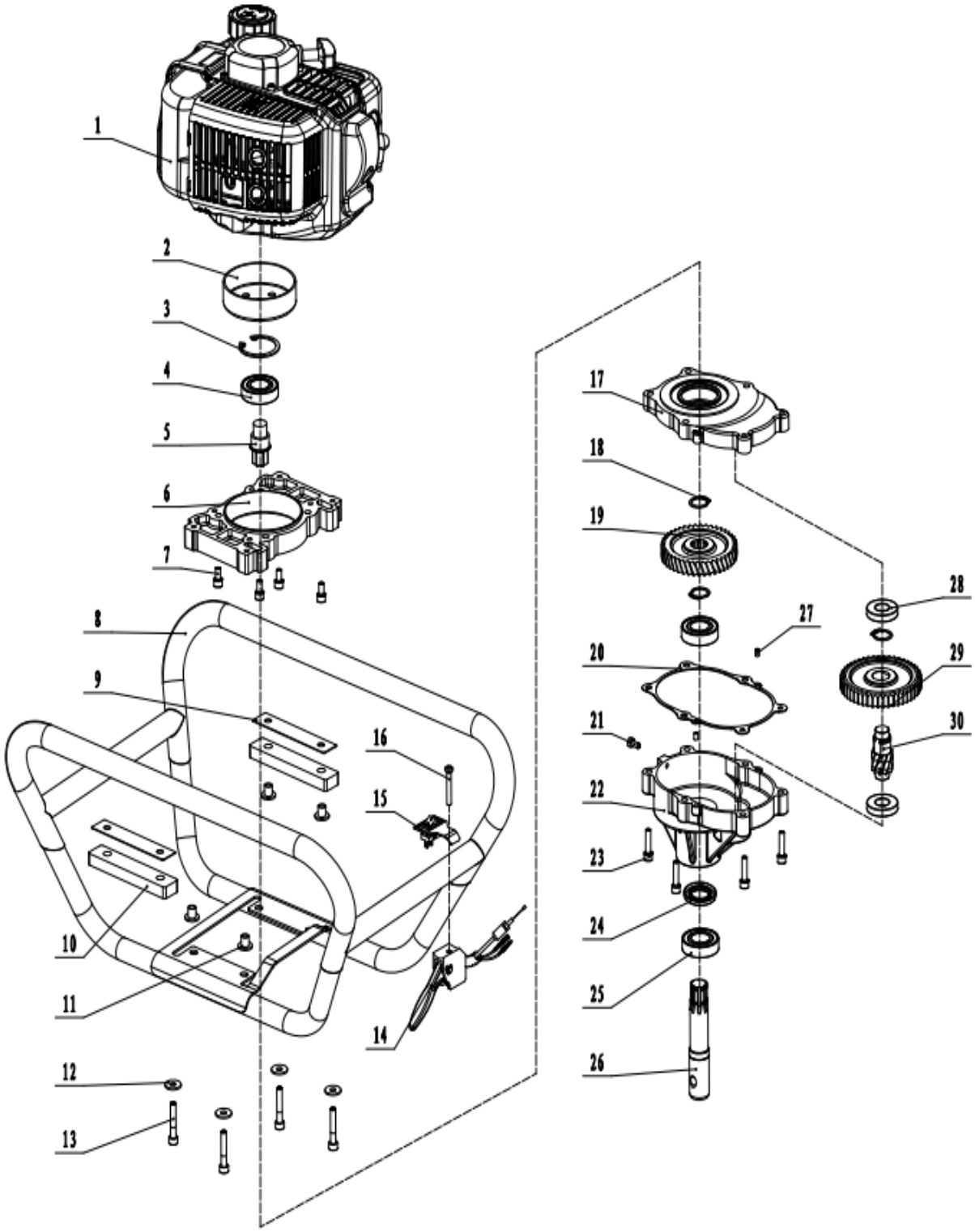
1
2
3
4
5
6
7
8
9
10
11
12
13
14
15
16
17
18
19
20
21
22
23
24
25
26
27
28
29
30

Powerhead part lists

No.	Name	Qty.	No.	Name	Qty.
1	Engine	1	21	M5X10 screw	1
2	Passive disk	1	22	gear box	1
3	Φ42 hole card	1	23	M6x55 screw	6
4	R12-2RSBearing	1	24	Oil seal TC-19X37X7	1
5	Short Gear	1	25	6004 Bearing	2
6	Fixing plate	1	26	Output shaft	1
7	M6X20 screw	4	27	cylinder pin	2
8	Handrail frame(two-person)	1	28	R10 bearing	2
9	Rubber pad	2	29	Gear	1
10	rubber plate	2	30	Small helical gear	1
11	support sleeve	4			
12	flat gasket	4			
13	M6X35 screw	4			
14	Throttle switch	1			
15	flame rollout switch	1			
16	M5x45 screw	1			
17	gear box cover	1			
18	circlip19	2			
19	Gear	1			
20	Gearbox paper gasket	1			

Limited Warranty

Northern Tool and Equipment Company, Inc. ("We" or "Us") warrants to the original purchaser only ("You" or "Your") that the Powerhorse product purchased will be free from material defects in both materials and workmanship, normal wear and tear excepted, for a period of one year from date of purchase. The foregoing warranty is valid only if the installation and use of the product is strictly in accordance with product instructions. There are no other warranties, express or implied, including the warranty of merchantability or fitness for a particular purpose. If the product does not comply with this limited warranty, your sole and exclusive remedy is that We will, at our sole option and within a commercially reasonable time, either replace the product or product component without charge to You or refund the purchase price (less shipping). This limited warranty is not transferable.

Limitations on the Warranty

This limited warranty does not cover: (a) normal wear and tear; (b) damage through abuse, neglect, misuse, or as a result of any accident or in any other manner; (c) damage from misapplication, overloading, or improper installation; (d) improper maintenance and repair; and (e) product alteration in any manner by anyone other than Us, with the sole exception of alterations made pursuant to product instructions and in a workmanlike manner.

Obligations of Purchaser

You must retain Your product purchase receipt to verify date of purchase and that You are the original purchaser. To make a warranty claim, contact Us at 1-800-222-5381, identify the product by make and model number, and follow the claim instructions that will be provided. The product and the purchase receipt must be provided to Us in order to process Your warranty claim. Any returned product that is replaced or refunded by Us becomes our property. You will be responsible for return shipping costs or costs related to Your return visit to a retail store.

Remedy Limits

Product replacement or a refund of the purchase price is Your sole remedy under this limited warranty or any other warranty related to the product. We shall not be liable for: service or labor charges or damage to Your property incurred in removing or replacing the product; any damages, including, without limitation, damages to tangible personal property or personal injury, related to Your improper use, installation, or maintenance of the product or product component; or any indirect, incidental or consequential damages of any kind for any reason.

Assumption of Risk

You acknowledge and agree that any use of the product for any purpose other than the specified use(s) stated in the product instructions is at Your own risk.

Governing Law

This limited warranty gives You specific legal rights, and You also may have other rights which vary from state to state. Some states do not allow limitations or exclusions on implied warranties or incidental or consequential damages, so the above limitations may not apply to You. This limited warranty is governed by the laws of the State of Minnesota, without regard to rules pertaining to conflicts of law. The state courts located in Dakota County; Minnesota shall have exclusive jurisdiction for any disputes relating to this warranty.

POWERHORSE™

Distributed by:

Northern Tool & Equipment Company, Inc.

Burnsville, Minnesota 55306

www.northerntool.com

Made in Thailand