1645 Lemonwood Dr.
Santa Paula, CA 93060 USA
Toll Free: (800) 253-2363
Tel: (805) 933-9970
bendpak.com

Double-Wide Parking Lift

Installation and Operation Manual

Manual P/N 5900285 – Revision A3 – September 2023

Models:

- PL-12000DP
- PL-12000DPS

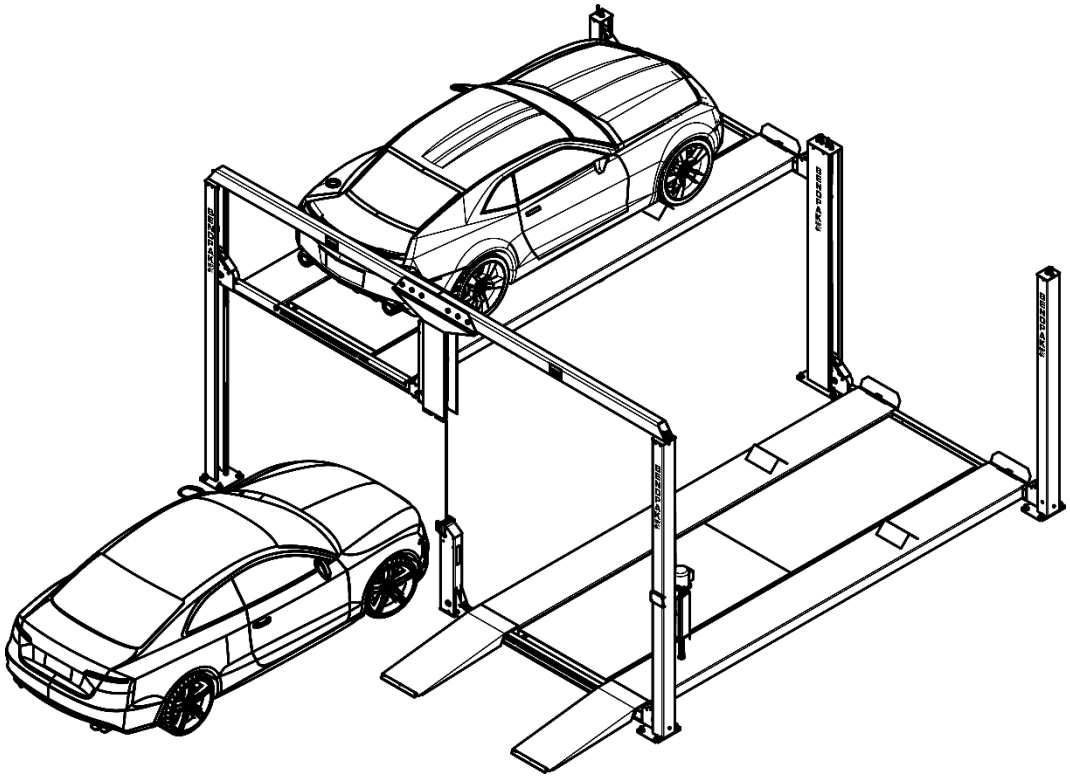

Original instructions in the English language

Designed and engineered by BendPak Inc. in Southern California, USA. Made in China.

⚠ DANGER

IMPORTANT Safety Instructions, save these instructions! Read the *entire* contents of this manual ***before*** using this product. Failure to follow the instructions and safety precautions in this manual can result in severe injury or death. Make sure all other operators also read this manual. Keep the manual near the product for future reference. ***By proceeding with setup and operation, you agree that you fully understand the contents of this manual and assume full responsibility for product use.***

Manual. PL-12000DP/DPS Parking Lift, *Installation and Operation Manual*, Manual Part Number 5900285, Manual Revision A3, Released September 2023.

Copyright. Copyright © 2023 by BendPak Inc. All rights reserved. You may make copies of this document if you agree that: you will give full attribution to BendPak Inc., you will not make changes to the content, you do not gain any rights to this content, and you will not use the copies for commercial purposes.

Trademarks. BendPak and the BendPak logo are registered trademarks of BendPak Inc. All other company, product, and service names are used for identification only. All trademarks and registered trademarks mentioned in this Manual are the property of their respective owners.

Limitations. Every effort has been made to ensure complete and accurate instructions are included in this Manual. However, product updates, revisions, and/or changes may have occurred since this Manual was published. BendPak reserves the right to change any information in this Manual without incurring any obligation for equipment previously or subsequently sold. BendPak is not responsible for typographical errors in this Manual. Find the latest version of the **manual for your product on the BendPak website**.

SCAN FOR DIGITAL PDF

Warranty. The BendPak warranty is more than a commitment to you: it is also a commitment to the value of your new product. Contact your nearest BendPak dealer or visit **www.bendpak.com/support/warranty** for full warranty details. Go to **bendpak.com/support/register-your-product/** and fill out the online form to register your product (be sure to click **Submit**).

Safety. Your Lift was designed and manufactured with safety in mind. However, your safety also depends on proper training and thoughtful operation. Do not install, operate, maintain, or repair the unit without reading and understanding this Manual and the labels on the unit; ***do not use your Lift unless you can do so safely!***

Owner Responsibility. In order to ensure operator safety and maintain your product properly, it is the responsibility of the product owner to read and follow these instructions:

- Follow all setup, operation, and maintenance instructions.
- Make sure product setup and use conforms to all applicable local, state, and federal codes, rules, and regulations, such as state and federal OSHA regulations and electrical codes.
- Read and follow all safety instructions. Keep them readily available for operators.
- Make sure all operators are properly trained, know how to safely operate the unit, and are properly supervised.
- Do not operate the product until you are certain all parts are in place and operating correctly.
- Carefully inspect the product on a regular basis and perform all maintenance as specified.
- Service and maintain the unit only with approved replacement parts.
- Keep all instructions permanently with the product and make sure all labels are clean and visible. BendPak makes no promises, guarantees or assurances that our products meet any state, county, federal or international mandated permit, license, code, standard, certification, or any other mandate other than what is listed or shown on BendPak website(s), or any BendPak or Ranger online or published catalog. Not all BendPak lift models meet the standards as prescribed by ANSI/ALI ALCTV-(current edition) or ANSI/UL 201. Consult **www.autolift.org** for a complete list of lift models that meet ANSI/ALI ALCTV-(current edition) or ANSI/UL 201, or contact BendPak via **contact@bendpak.com**. Buyer assumes full responsibility for any state, county, federal or international mandated permit, license, code, standard, certification, or any other mandate required related to the installation and/or operation of any BendPak or Ranger product. BENDPAK will not be responsible for any charges, fines, liens, or other levies imposed on the Buyer related to any special or regional structural, seismic or any other building code and/or codes such as the Uniform Building Code (UBC), International Building Code (IBC), or any other state, county, federal or international mandated permit, license, code, standard, certification, or other mandate, law, rule, regulation or directive by any other agency, government, administrations, or corporations whether state, county, federal, or international mandated.
- **Only use the Lift if it can be used safely!**

Unit Information. Enter the Model Number, Serial Number, and the Date of Manufacture from the Label on your unit. This information is required for part or warranty issues.

Model: _____

Serial: _____

Date of Manufacture: _____

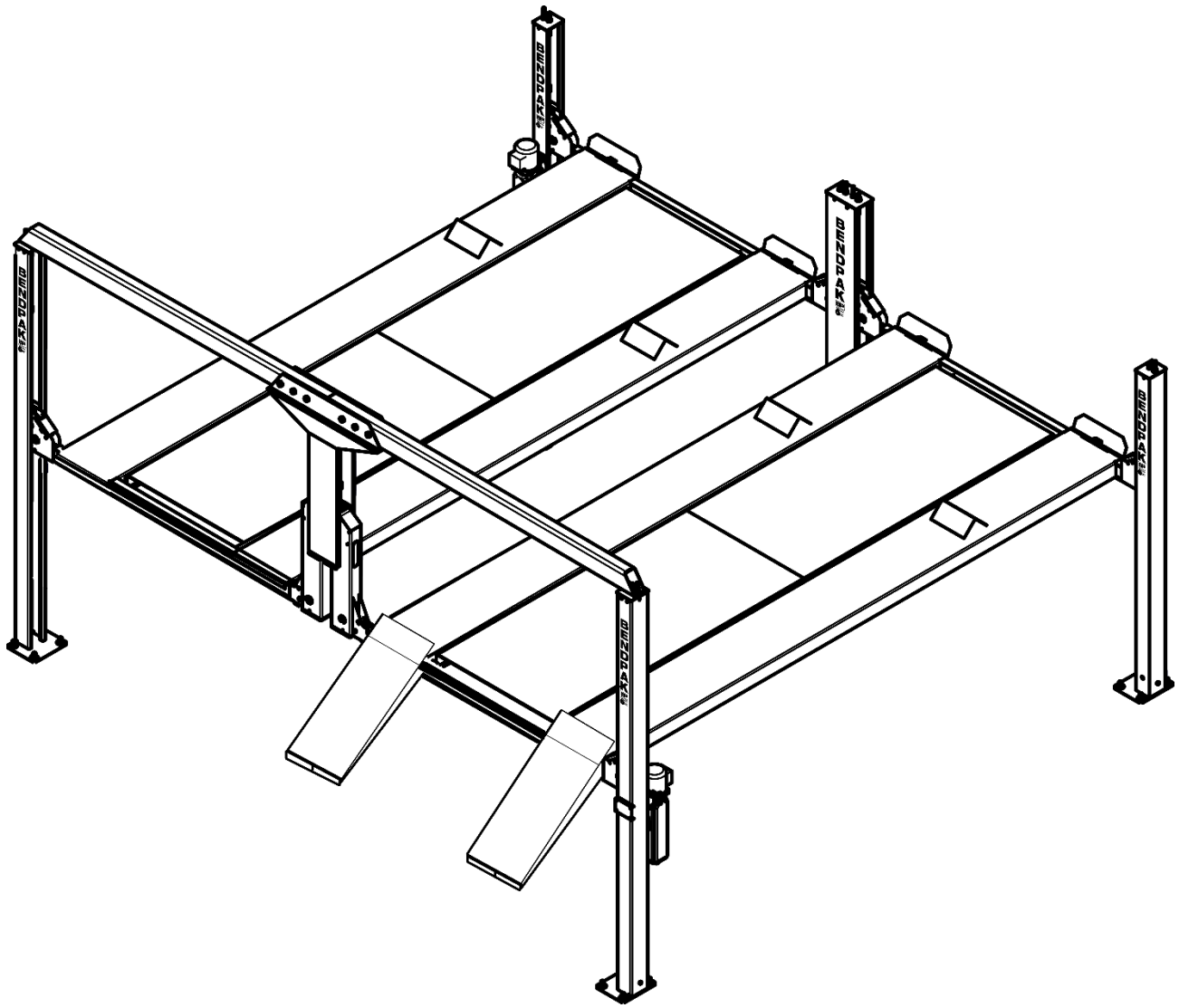

Table of Contents

Introduction 4

Shipping Information 5

Safety Considerations 5

Components 8

Specifications 9

Installation Checklist 11

Installation 12

Operation 67

Maintenance 69

Troubleshooting 73

Wiring Diagrams 75

Labels 76

Parts Drawings 79

Maintenance Logs 97

Introduction

This Manual describes the PL-12000DP Series Parking Lifts.

PL-12000DP Double Wide Parking Lift

PL-12000DPS Double Wide Parking Lift – Small footprint

Parking Lift, which allows double the number of Vehicles in the same parking area. Each individual Platform supports up to 6,000 lbs. (2,722 kg).

The PL-12000DP uses ***two*** hydraulic Power Units; each Platform uses a separate Power Unit and Lifting Cables, Hydraulic Hose, Return Line, Air Line, and includes one pair of Aluminum drive-up ramps. Additional Aluminum drive-up ramp accessory kits are also available (*5174705*).

More information about the full line of BendPak products can be found at **bendpak.com**.

This Manual is mandatory reading for all users of PL-12000DP Series Parking Lifts, including anyone who installs, uses, maintains, repairs, or wants to know more about them.

⚠ **DANGER** Exercise caution when installing, operating, maintaining, or repairing this equipment; failure to do so could result in property and product damage, injury, or loss of life. Only authorized personnel are to operate this equipment. All repairs must be performed by an authorized technician. Modifications to the Lift voids the warranty and increases the chances of injury or property damage. Read and follow the instructions on the labels on the unit.

SCAN FOR VIDEO

Keep this Manual on or near the equipment so anyone who uses/services it can read it.

If you are having issues, refer to the **Troubleshooting** section of this Manual for assistance. Technical support and service is available from your dealer, on the Web at **bendpak.com/support**, by email at **support@bendpak.com**, or by phone at **(800) 253-2363**, option 7 then 4.

You may also contact BendPak for parts replacement information (please have the model and serial number of your unit available) at **(800) 253-2363**, option 7 then 5.

Shipping Information

Your equipment was carefully checked before shipping. However, you should thoroughly inspect the shipment ***before*** you sign to acknowledge that you received it.

When you sign a bill of lading, it tells the carrier that the items on the invoice were received in good condition. *To protect yourself, do not sign until **after** you have inspected the shipment.* If any of the items listed on the bill of lading are missing or are damaged, do not accept the shipment until the carrier makes a notation on the bill of lading that lists the missing and/or damaged goods.

If you discover missing or damaged goods ***after*** you receive the shipment and have signed the bill of lading, notify the carrier at once and request the carrier to make an inspection. If the carrier will not make an inspection, prepare a signed statement to the effect that you have notified the carrier (on a specific date) and that the carrier has failed to comply with your request.

It is difficult to collect for loss or damage after you have given the carrier a signed bill of lading. If this happens to you, file a claim with the carrier promptly. Support your claim with copies of the bill of lading, freight bill, invoice, and photographs, if available. Our willingness to assist in helping you process your claim does not make us responsible for collection of claims or replacement of lost or damaged materials.

Safety Considerations

Read this entire manual carefully before using your new product. Do not install or operate the product until you are familiar with all operating instructions and warnings. Refer to ANSI/ALI ALIS Standard *Safety Requirements for Installation and Service of Automotive Lifts* for more information about safely installing your Lift.

⚠ **WARNING** **California Proposition 65**. This product can expose you to chemicals including styrene and vinyl chloride which are on the list of over 900 chemicals identified by the State of California to cause cancer, birth defects or reproductive harm. **ALWAYS** use this product in accordance with BendPak BendPak's instructions. For more information go to **www.P65Warnings.ca.gov**.

Important Safety Instructions!

SAVE THESE INSTRUCTIONS!

1. Read all instructions.
2. Care must be taken as burns can occur from touching hot parts.
3. Do not operate equipment with a damaged cord or if the equipment has been dropped or damaged – until it has been examined by a qualified service person.
4. Do not let a cord hang over the edge of a table, bench, or counter or come in contact with hot manifolds or moving fan blades.
5. If an extension cord is necessary, a cord with a current rating equal to or more than that of the equipment should be used. Cords with a current rating less than the equipment may overheat. Care should be taken to arrange the cord so that it will not be tripped over or pulled.
6. Always unplug the equipment from the electrical outlet when not in use. Never use the cord to pull the plug from the outlet. Grasp the plug and pull to disconnect.
7. Let equipment cool completely before storing. Loop cord loosely around unit when not in use.

8. To reduce risk of fire, do not operate in vicinity of open containers of flammable liquids (gasoline).
9. Adequate ventilation should be provided when working on operating internal combustion engines.
10. Keep hair, loose clothing, fingers, and all parts of body away from moving parts.
11. To reduce the risk of electric shock, do not use on wet surfaces or expose to rain.
12. Use only as described in this manual. Use only BendPak recommended attachments.
13. ALWAYS WEAR SAFETY GLASSES. Everyday eyeglasses only have impact resistant lenses, they are not safety glasses.
14. To reduce the risk of injury, close supervision is necessary when products are used around children.
15. To reduce risk of injury, ***never*** attempt to lift more than rated capacity. Refer to loading instructions.
16. The Lift uses electrical energy; if your organization has Lockout/Tagout policies, make sure to implement them after connecting the Lift to a power source.
17. Refer to markings for proper load on electrical receptacles.
18. Only operate the Lift between temperatures of +41°F to +104°F (+5°C to +40°C).
19. Lift should ***only*** be operated by authorized personnel. Keep children and untrained personnel away from the Lift.
20. Do not make any modifications to the Lift; this voids the warranty and increases the chances of injury or property damage.
21. Do not use the Lift while tired or under the influence of drugs, alcohol, or medication.
22. Consider the work environment. Keep the work area clean. Cluttered work areas invite injuries. Keep areas well lit.
23. **Always** make sure Lift is secured on Safety Locks before working on or near a Vehicle.
24. Make a thorough inspection of the product at least once a year. Replace any damaged or severely worn parts, decals, or warning labels. Replace worn or damaged parts with BendPak or BendPak approved parts and assemblies only.
25. BendPak recommends referring to the ANSI/ALI ALIS Standard *Safety Requirements for Installation and Service* for more information about safely installing, using, and servicing the Lift.
26. **PL-12000DP** and **PL-12000DPS** are Double-Wide Parking Lifts. ***Use them only for their intended purpose.***
27. You ***must*** wear OSHA-approved (publication 3151) personal protective equipment at all times when installing, using, maintaining, or repairing the Lift. Leather gloves, steel-toed work boots, eye protection, back belts, and hearing protection are ***mandatory***.
28. Keep loads balanced on Platforms. Clear area immediately if a Vehicle is in danger of falling off Lift.
29. Modifications void the warranty and increase the chances of injury or property damage. ***Do not modify any safety-related features in any way***.
30. Make sure all operators read and understand this Installation and Operation Manual. ***Keep the manual near the Lift at all times***.

31 While handling a Hydraulic Cylinder or a Hydraulic Hose, ***always*** wear gloves. In rare cases, a needle-like stream of hydraulic fluid (even at low pressure) can penetrate fingers, hands, or arms; such a puncture can feel like a bite, electric shock, or a prick. While it may seem like a minor issue, any amount of hydraulic fluid injected into the human body is a serious issue. Anyone suffering

such a puncture wound should be ***immediately*** taken to a hospital emergency room to determine the extent of the injury. Explain the circumstances of the injury to the attending physician, including what kind of Hydraulic Fluid was involved. ***Do not assume a puncture wound that could have been caused by Hydraulic Fluid is a minor issue; it could be life threatening.***

32. Make an inspection of the Lift ***before*** using it. Check for damaged, worn, or missing parts. Do not use it if you find any of these issues. Instead, take it out of service, then contact an authorized repair facility, your dealer, or BendPak at **(877) 432-6627** or **support@BendPak.com**.

⚠ **WARNING** ***Chock Wheels*** to reduce the risk of property damage, personal injury, or loss of life. ***NEVER*** park any vehicle on the Lift's runways without placing two suitable ***Wheel Chocks*** behind each rear tire so that the vehicle cannot roll backward from Lift. Vehicles parked on Lift ***MUST*** also be placed in Park or First Gear (Manual Transmission) with the Parking Brake fully applied.

Symbols

Following are the symbols used in this manual:

⚠ **DANGER** Calls attention to an immediate hazard that **will** result in injury or death.

⚠ **WARNING** Calls attention to a hazard or unsafe practice that **could** result in injury or death.

⚠ **CAUTION** Calls attention to a hazard or unsafe practice that could result in minor personal injury, product, or property damage.

NOTICE Calls attention to a situation that, if not avoided, could result in product or property damage.

Tip Calls attention to information that can help to use the product better.

Liability Information

BendPak Inc. assumes **no** liability for damages resulting from:

- Use of the product for purposes other than those described in this manual.
- Modifications to the equipment without prior written permission from BendPak Inc.
- Injury or death caused by modifying, disabling, overriding, or removing safety features.
- Damage to the equipment from external influences.
- Incorrect operation of the equipment.

Components

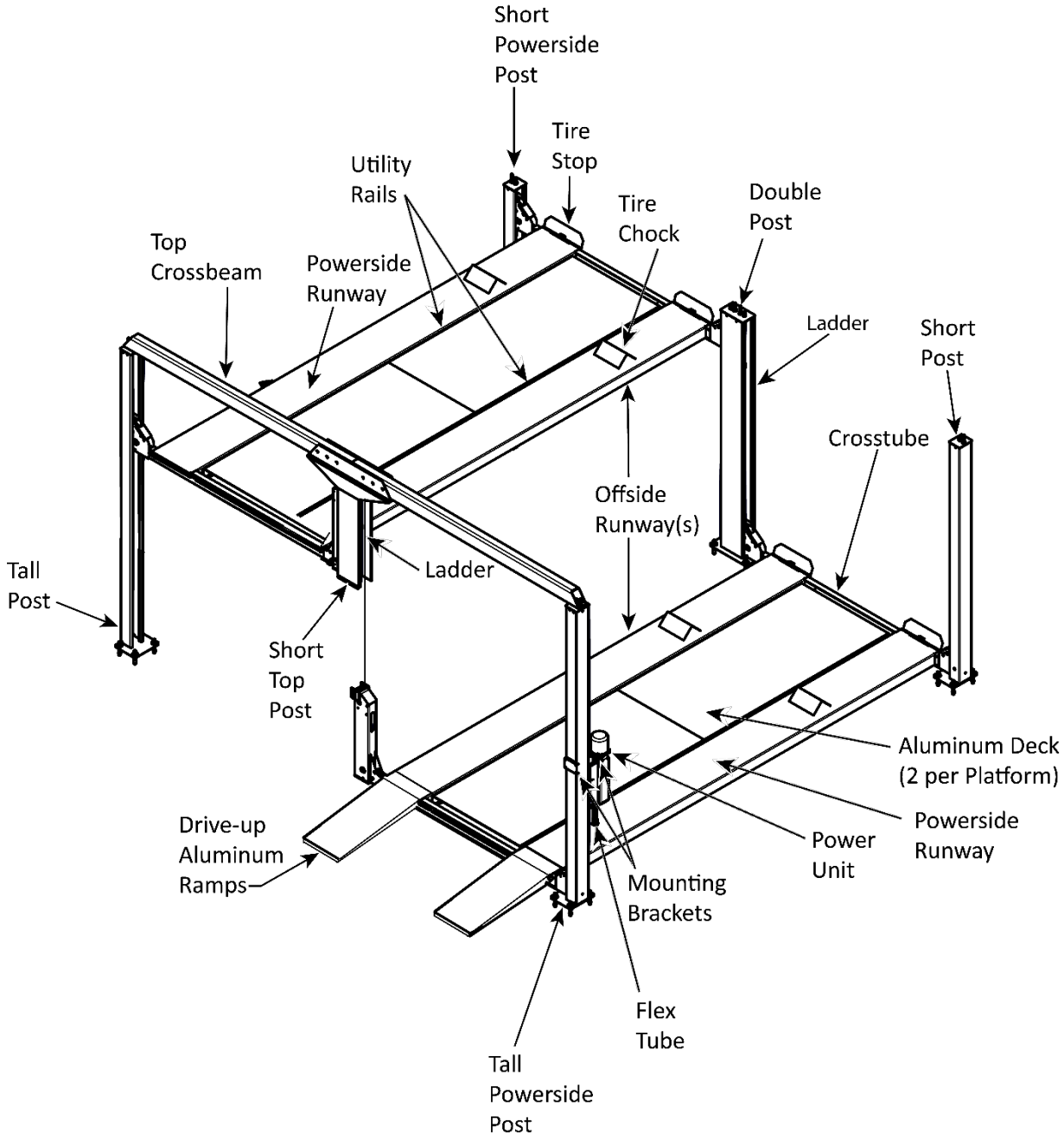
Short Powerside Post
Tire Stop
Utility Rails
Tire Chock
Double Post
Top Crossbeam
Powerside Runway
Ladder
Short Post
Crosstube
Offside Runway(s)
Tall Post
Ladder
Short Top Post
Aluminum Deck (2 per Platform)
Powerside Runway
Power Unit
Drive-up Aluminum Ramps
Mounting Brackets
Flex Tube
Tall Powerside Post

Specifications

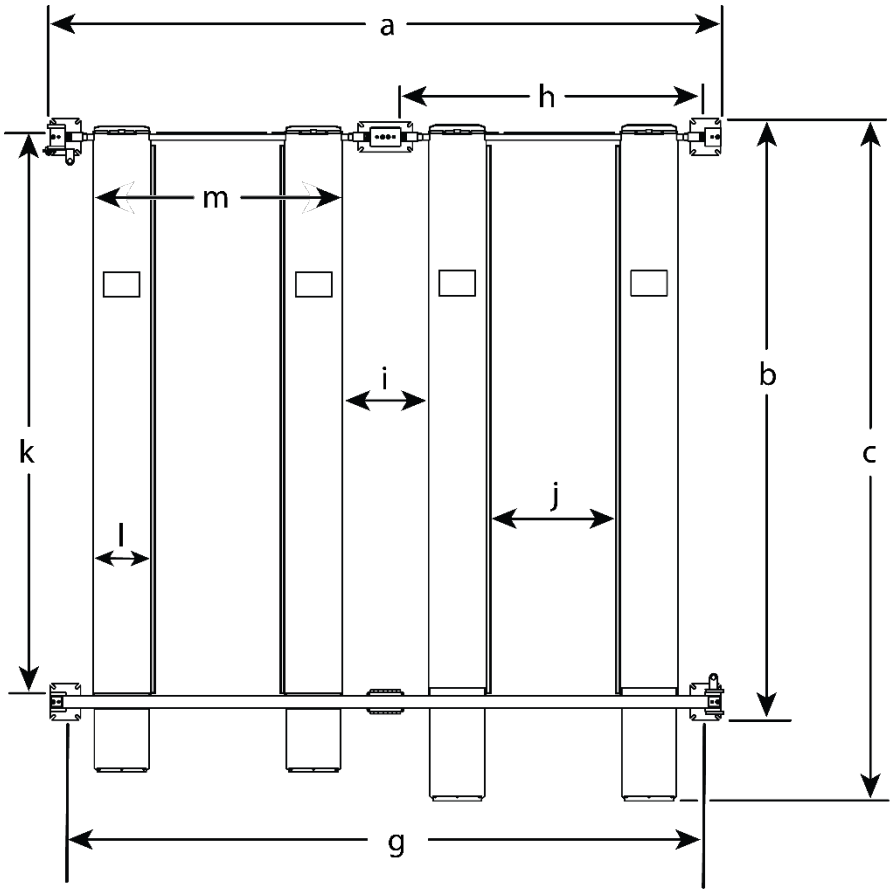

Top view

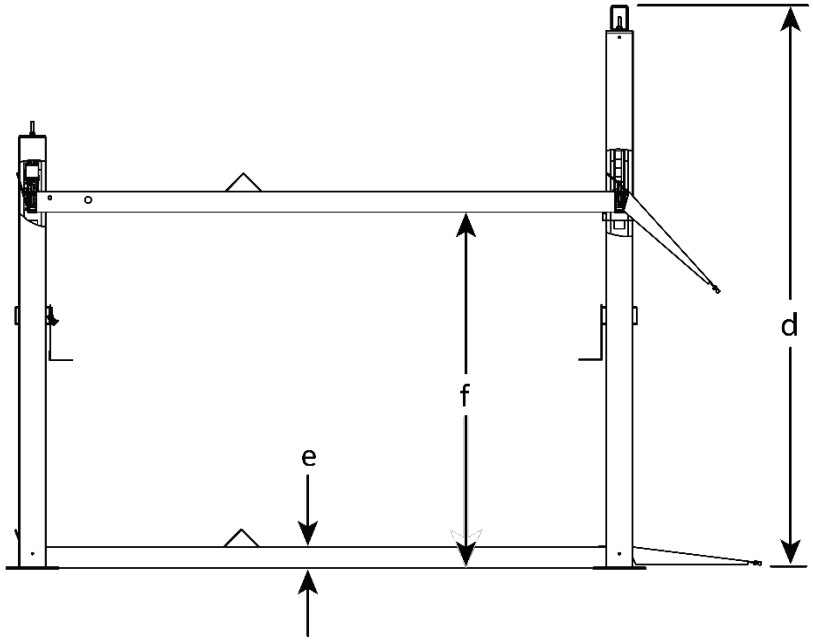

Side view

Model	**PL-12000DP**	**PL-12000DPS**
Number of Platforms[1]	2	2
Load capacity per Platform	6,000 lbs. / 2,722 kg	6,000 / 2,722 kg
a Total width[2]	221.25 (± 0.125) in. 5,620 (± 3.2) mm	221.25 (± 0.125) in. 5,620 (± 3.2) mm
b Outside length	198 in. / 5,028 mm	174 in. / 4,418 mm
c Total length	242.5 in. / 6,160.5 mm	218.5 in. / 5,550.5 mm
d Total height	130.5 in. / 3,314 mm	118.5 in. / 3,009 mm
e Min. runway height	5.00 in. / 127 mm	5.00 in. / 127 mm
f Maximum rise	82.2 in. / 2,210 mm	70.2 in. / 1,784 mm
g Width between Posts	211 in. / 5,362 mm	211 in. / 5,362 mm
h Width between the short and double posts	100.25 (± .125) in. 2,546.5 (± 3.2) mm	100.25 (± 0.125) in. 2,546.5 (± 3.2) mm
i Width between Platforms	29 in. Min.– 41.5 in. Max. 739 mm – 1,055 mm Max.	29 in. Min. – 41.5 in. Max. 739 mm Min.– 1,055 mm Max.
j Width between Runways	35 in. Min. or 41.0 in. Max. 887 mm Min. or 1,045 mm Max.	35 in. Min. or 41.0 in. Max. 887 mm Min. or 1,045 mm Max.
k Runway length	183 in. / 4,649 mm	159.00 in. / 4,039 mm
l Runway Width	19 in. / 482 mm	19 in. / 482 mm
m Outside edge of Runways	75.75 in. Min. or 82 in. Max. 1,927 mm Min. or 2,085 mm Max.	75.75 in. Min. or 82 in. Max. 1,927 mm Min. or 2,085 mm
Max. Load Operating Pressure	2,460 psi	
Safety Lock Positions	6	6
Lifting time	≈45 seconds	≈45 seconds
Motor[3]	220 VAC, 50/60 Hz, 1 Ph,	220 VAC, 50/60 Hz, 1 Ph

1 Each Platform consists of one Powerside and one Offside Runway and the two optional Aluminum Decks between them.

2 Total Width is defined as the dimensions outside-to-outside of the Baseplates.

3 Special voltages available upon request.

Specifications subject to change without notice.

Installation Checklist

Following are the steps required to install a PL-12000DP Parking Lift. Perform them in the order shown.

NOTICE The PL-12000DP Series Parking Lift has ***two*** separate Platforms. For installation, BendPak recommends installing one Platform at a time, then repeating the same process on the adjacent Platform.

☐ 1. Review the installation safety rules.
☐ 2. Make sure you have the necessary tools.
☐ 3. Plan for electrical work.
☐ 4. Select the installation location.
☐ 5. Review the Lift Orientation.
☐ 6. Create Chalk Line Guides.
☐ 7. Unload and unpack the Lift components.
☐ 8. Move the Front Posts into position.
☐ 9. Move the Rear Posts into position.
☐ 10. Install the Front Crosstubes.
☐ 11. Install the Rear Crosstubes.
☐ 12. Install the Top Tube and Short Post.
☐ 13. Install Ladders in Post and Top Cap.
☐ 14. Raise the Crosstubes in the Posts.
☐ 15. Secure the Ladders at Post Bottoms.
☐ 16. Remove the Cable Sheaves.
☐ 17. Install the Runways.
☐ 18. Route the Lifting Cables.
☐ 19. Install the Air Line.
☐ 20. Install the Hydraulic Hose.
☐ 21. Install the Power Unit.
☐ 22. Install the Flex Tube Bracket Plate and Angle Plate.
☐ 23. Install Flex Tube.
☐ 24. Install the Pushbutton Air Valve and install the Air Line.
☐ 25. Repeat Steps 14 through 24 for the remaining Platform.
☐ 26. Contact the Electrician.
☐ 27. Connect to a power source (***Electrician required***).
☐ 28. Install the Power Disconnect Switch and Thermal Disconnect Switch (***Electrician required***).
☐ 29. Anchor the Posts.
☐ 30. Perform final leveling.
☐ 31. Install the Lift Accessories.
☐ 32. Install Anti-Slip Tape.
☐ 33. Test the Lift.
☐ 34. Review the final checklist.
☐ 35. Leave the manual for the owner/operator.

Installation

The installation process includes multiple steps. Perform them in the order listed.

⚠ **WARNING** ***Only use the factory-supplied parts that are supplied with your Lift***. If you use parts from a different source, you void your Warranty and compromise the safety of everyone who installs or uses the Lift. If you are missing parts, visit **bendpak.com/support** or call **(800) 253-2363**, option 7 then 5.

Safety

While installing this equipment, your safety depends on proper training and thoughtful operation.

⚠ **WARNING** Do not install this equipment unless you have automotive Lift installation training. Always use proper lifting tools, such as a Forklift or Shop Crane, to lift heavy components, and capable assistants. Do not install this equipment without reading and understanding this Manual and the Labels on the unit.

Only fully trained personnel should be involved in installing this equipment. Pay attention at all times. Use appropriate tools and lifting equipment. Stay clear of moving parts.

⚠ **WARNING** You ***must*** wear OSHA-approved (publication 3151) appropriate protective equipment at all times during installation: leather gloves, steel-toed work boots, eye protection, back belts, and hearing protection are ***mandatory***.

Tools

The following tools, equipment, and personnel are needed:

- Suitable Forklift, Hi-Lift Shop Crane (not an engine hoist), and heavy-duty rolling dolly
- Three Capable Assistants
- Rotary hammer drill
- ¾ in. carbide bit (conforming to ANSI B212.15)
- Hammer, crowbar, wood blocks
- Four-foot level
- Open-end wrench set, SAE, and metric
- Socket and ratchet set, SAE, and metric
- Hex-key wrench set
- White Lithium Grease
- Red Lithium Grease
- Chalk line
- Medium-sized flat screwdriver
- Tape measure, 25 feet min.
- Needle-nose pliers
- Lifting Straps
- 4 Sawhorses
- 12-foot ladder
- Medium crescent and pipe wrenches
- Torque wrench
- Compressed air
- General assorted tools

Planning for Electrical Work

Hire a ***Licensed Electrician*** at the appropriate time during the installation.

Notify the Electrician in advance so that they arrive with the appropriate wire for connecting the Power Unit to the power source, a Power Disconnect Switch, and a Thermal Disconnect Switch. Refer to **Contact the Electrician** for more information.

NOTICE Wiring must be provided by the Electrician; it is ***not*** supplied with the Lift.

⚠ **DANGER** All wiring ***must*** be performed by a licensed Electrician. Verify all electrical work conforms to all applicable local and federal codes, rules, and regulations, such as state and federal OSHA regulations and electrical codes.

The Electrician needs to:

- **Connect a 220 VAC power source to the Power Units**. A power source is required. *Special voltages available upon request*.
- **Install a Power Disconnect Switch**. Ensures one can quickly and completely interrupt electrical power to the Lift in the event of an electrical circuit fault, emergency situation, or when equipment is undergoing service or maintenance. You must put it within sight and easy reach of the Lift operator. Refer to **Install a Power Disconnect Switch** for more information.
- **Install a Thermal Disconnect Switch**. Ensures the equipment shuts down in the event of an overload or an overheated motor. Refer to **Install a Thermal Disconnect Switch** for more information.

Select a Location

When selecting the location for the Lift, consider:

- **Architectural plans**. Consult the architectural plans for the desired installation location. Make sure there are no conflicts within the plans.
- **Available space**. Make sure there is enough space for the Lift: front, back, sides, approach, and above. Refer to **Specifications** for measurements.
- **Power**. Requires an electrical power source available for the Power Unit.

⚠ **DANGER** Risk of explosion: This equipment has internal arcing or parts that spark and should not be exposed to flammable vapors. The Power Unit's motor should not be located in a recessed area or below floor level. Never expose the motor to rain or other damp environments; damage to the motor caused by water is not covered under warranty.

- **Outdoor installations**. The PL-12000 Series Lifts are prohibited for outdoor installation.
- **Overhead obstructions**. Check for overhead obstructions such as building supports, heaters, electrical lines, low ceilings, hanging lights, and so on. ***Do not allow vehicles to hit overhead obstructions (each vehicle has a different roof height)***. There's a simple formula for determining how much height is needed, based on the Vehicles that will be parked on the Platforms:

  7-in. min. Clearance + Height of the particular Vehicle on the Platform + height of the Safety Locks.

  Each location height needs to be ***higher*** than the sum of these values to allow safe clearance and to prevent vehicle damage.

  The 7 in. clearance above the vehicle includes the height of the Platform plus the height needed to raise the Lift off of the Safety Locks. Note this figure is a rough estimate, for calculations purposes only.

NOTICE To find the "height of the Safety Lock", raise the Platform and lock it on its Safety Lock position, then measure from the ground to the top of the raised Platform. Note that the maximum rise height listed in **Specifications** is how high the mechanism can rise before stopping; ***the Safety Lock height is not the same as maximum rise***.

Refer to the figure below.

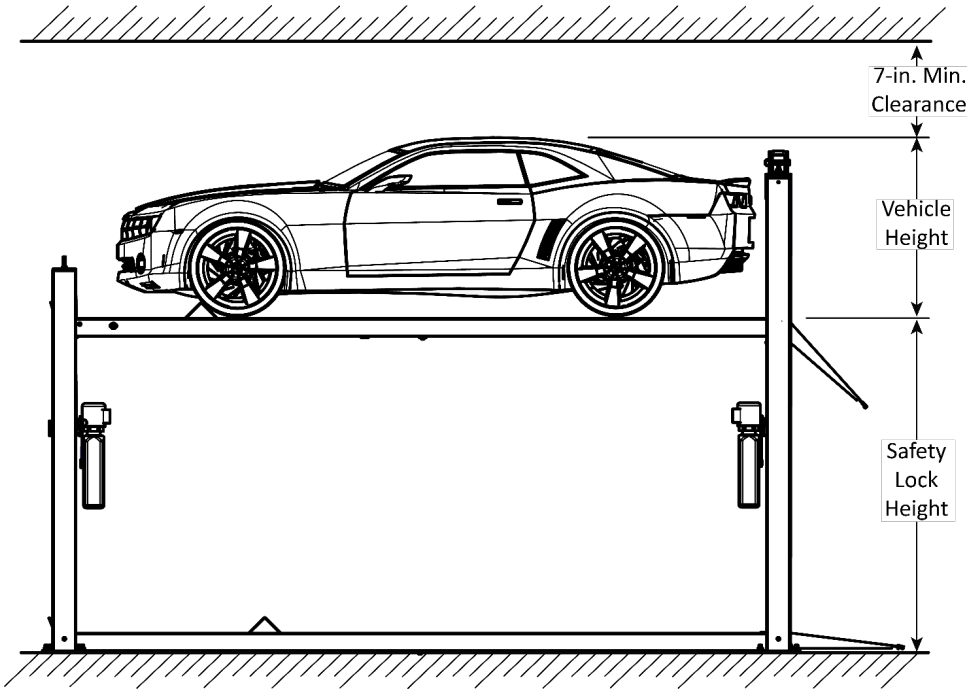

- **Shimming**. If the Concrete floor is not level and you are anchoring the Lift, Shims may be used under the bases of the Posts up to 1/2 in., to level the Lift. To estimate the Shim requirements, use a transit level and targets to check for flatness. Use the provided Shims as required.

NOTICE Do not shim a Post more than ½ in. using the provided Shims. A maximum shim of 2 in. is possible by ordering optional Shim Plates. Contact BendPak at **(800) 253-2363**, option 7 then 5. Please have the model and serial number of the Lift available.

- **Floor**. Only install the Lift on a flat, concrete floor; do not install on asphalt or any other surface. The surface must be level; do not install if the surface has more than 3 degrees of slope.

⚠ **WARNING** Installing the Lift on a surface with more than 3 degrees of slope could lead to injury or even death. Only install PL-12000DP Series Lifts on a level floor, defined as no more than 3/8 in. difference over the installation area. If the floor is not level, consider making the floor level or using a different location.

- **Concrete specifications**. Do not install the Lift on cracked or defective concrete. Do not install the Lift within 6 in. of cracked or defective Concrete. Make sure the concrete is at least 4.25 in. thick, 3,000 PSI, and cured for a minimum of 28 days.

⚠ CAUTION BendPak Lifts are supplied with installation instructions and concrete anchors that meet the criteria set by the current version of the American National Standard "Automotive Lifts – Safety Requirements for Construction, Testing, and Validation", ANSI/ALI ALCTV. You are responsible for any special regional structural and/or seismic anchoring requirements specified by any other agencies and/or codes such as the Uniform Building Code (UBC) and/or International Building Code (IBC). Be sure to check your floor for the possibility of it being a ***post-tension slab***. In this case, contact the building architect before drilling. Using ground penetrating radar may help you find the tensioned steel.

⚠ WARNING Cutting through a tensioned cable can result in injury or death. Do not drill into a post-tension slab unless the building architect confirms you are not going to hit tensioned steel, or you have located it using ground penetrating radar. If colored sheath comes up during drilling, stop drilling immediately.

Review the Lift Orientation

On each Platform, one Runway has a Hydraulic Cylinder underneath it. This runway is termed the **Powerside Runway** and is the starting point for the Lifting Cables; the Powerside Runways must be installed next to the Power Posts (which support the Hydraulic Power Units). The middle runways are termed **Offside Runways**. These runways have no hydraulics or lifting cables underneath. The Rear of the Lift is the approach side. Supplied aluminum ramps (X2) install at either approach. Refer to the figure below.

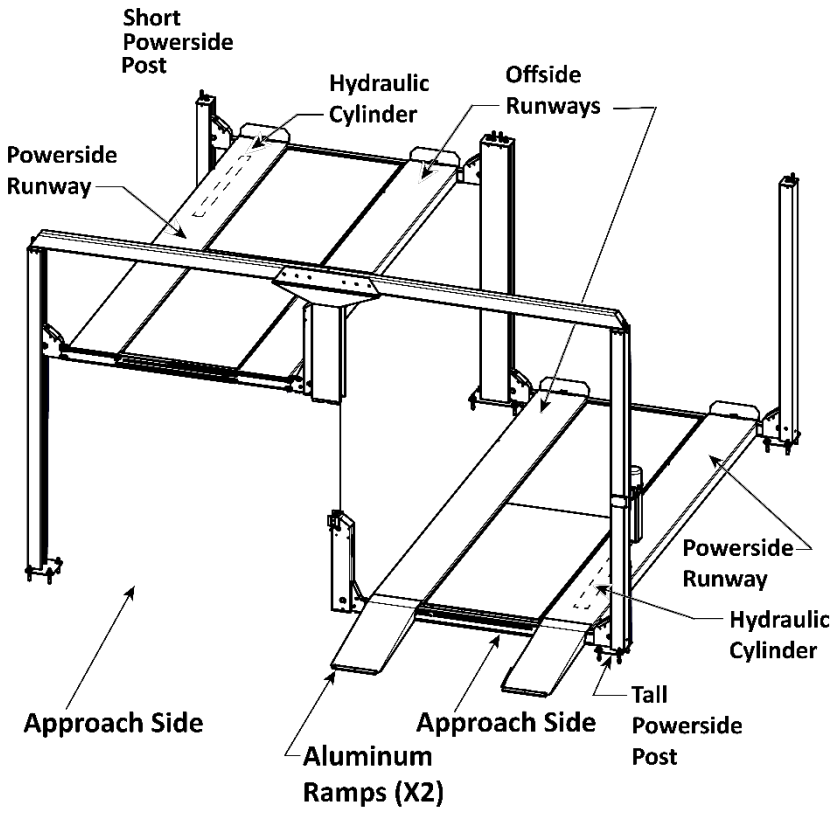

Creating Chalk Line Guides

Use Chalk Line Guides to ensure that the Posts are installed correctly. Create the Chalk Line Guides so that the outside edges of all four Posts fit into the four corners created by the Chalk Line Guides. See **Specifications** to determine the **Total Width** and **Outside Posts Length** for your Lift.

NOTICE: ***Do not use the Total Length value***; this includes Drive-up Ramps, which are not taken into consideration for creating Chalk Line Guides.

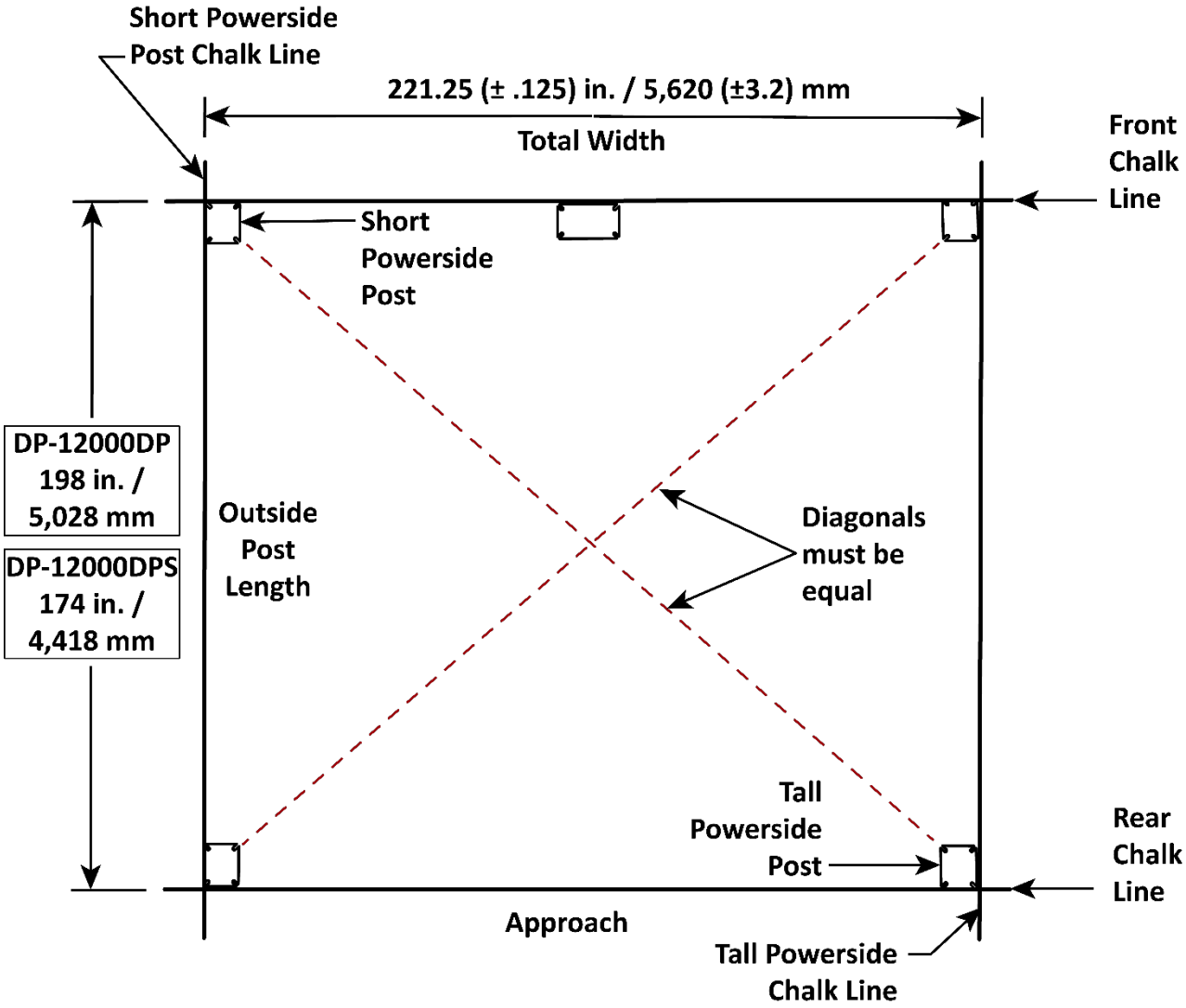

Top view. Not drawn to scale. Components removed for clarity.

To create Chalk Line Guides:

1. Create the Front Chalk Line defining the Front of the Lift; make the Front Chalk Line longer than the Total Width setting for your Lift.
2. Create the Powerside Chalk Lines at a 90° angle to the Front Chalk Line and parallel to each other; make the Chalk Lines longer than the Outside Post Length setting for your Lift model.
3. Create the Rear Chalk Line parallel to the Front Chalk Line. Make the Rear Chalk Line longer than the Total Width setting for your Lift model; the Front and Rear Chalk Lines must also be parallel to each other.

4. Before moving the Posts into position, measure ***diagonally*** to make sure the two diagonal measurements are the same. This ensures the layout is at 90-degree angles (squared) and correct. ***Remember to check the diagonals. The Width Chalk Line measurements MUST be within ± .125 in. or ±3.2 mm.***
5. When the Posts are moved into position, place the corners of the Base Plates inside the corners created by the four Chalk Lines.

Unloading and Unpacking

Once the components are unloaded, it is your responsibility to move around. As the Lift includes a number of heavy pieces, the closer items are unloaded to the installation location, the less heavy lifting.

⚠ **CAUTION** Some Lift components are very heavy; if handled incorrectly, they may damage materials like tile, sandstone, brick, or cause injury. Try to handle the Lift components minimally: when delivered and again when moved into position. Best to have a Forklift or Shop Crane to move them into position. Use care.

⚠ **WARNING** The Posts and Runways are delivered with stabilizing structures on each end. Be careful when removing these stabilizing structures; the Posts and Runways can shift or even fall. If they fall on a person, they may cause serious injury.

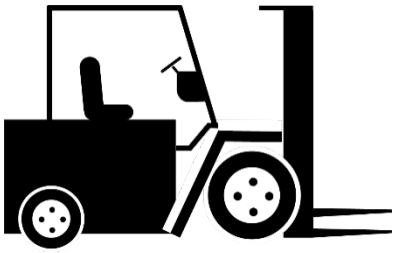

Move the Front Posts into Position

Your Lift has a total of ***SIX*** Posts of varying heights. The three Posts at the Front of the Lift are the same height.

Once the Chalk Line Guides have been created, move the Front Posts into position.

The Front end of the Lift consists of three Posts:

- **Short Powerside Post**. Has a Mounting Bracket on both sides, and the Crosstube Slot faces toward the Short Double Post.
- **Double Post**. Has a Crosstube Slot on both sides, and is placed in between the Short Powerside Post and the Short Post.
- **Short Post**. Is installed on the other side of the Full Double Post, with the Crosstube Slot facing the inside of the Lift. The Short Post does ***not*** have any Mounting Brackets for the Power Unit.

⚠ **WARNING** The Posts are ***very*** heavy; be careful when handling. If they shift position or fall, they may cause very serious injury and/or property damage. Only allow trained personnel to move the Posts and use appropriate lifting devices, such as a suitable Forklift or Shop Crane (not an engine hoist) and at least 3 capable assistants.

The following illustration shows the correct orientation for the 3 Front Posts, while placed on the ground before assembly.

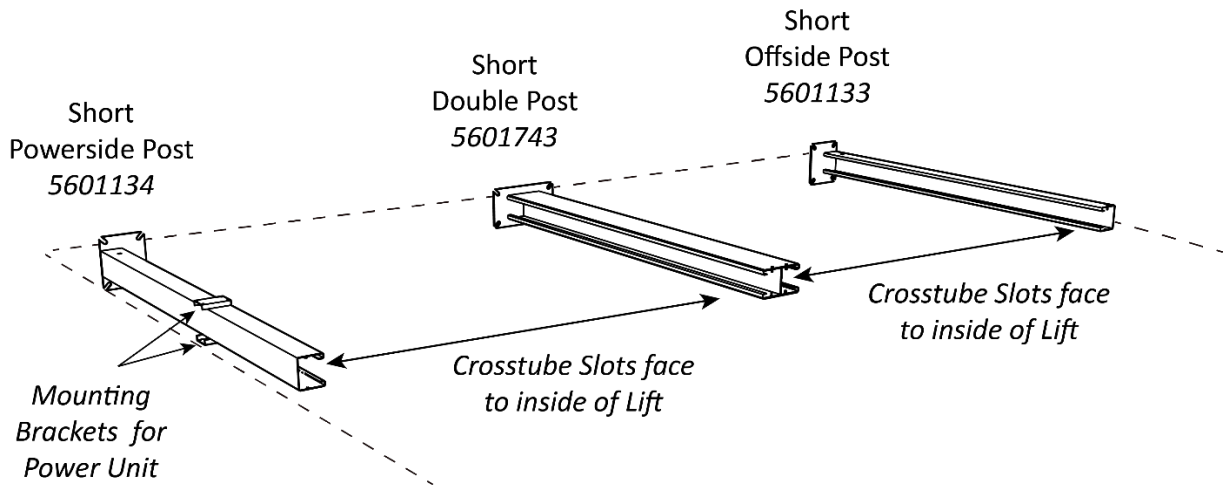

To move the Front Posts into position:

1. Using a Forklift or Shop Crane, move each Post, *one at a time*, to the inside corners of the Chalk Line Guides, while still leaving them on the ground.

   Verify that the Crosstube Slots in the Posts are facing to the **inside** of the Lift.

   Do not raise Posts yet; the following procedures are easier to complete if the Posts remain laying on the ground.

Place the Rear Posts in their Respective Locations

The Rear end of the Lift consists of two Posts:

- **Tall Powerside Post**. Has a Power Unit Mounting Bracket on both sides, and the Crosstube Slot faces towards the Short Post.
- **Tall Post**. Positioned opposite of the Short Post, with the Crosstube Slot facing the inside of the Lift.

⚠ **WARNING** The Posts are extremely heavy and tall; use caution. The Posts are not anchored at this point; if they shift position or fall, they may cause serious injury and/or property damage. Move all vehicles and bystanders away to leave an open work area. Only allow trained personnel to move the Posts and use appropriate lifting devices, such as a Forklift or Shop Crane.

The following illustration shows the correct orientation for the Rear Posts.

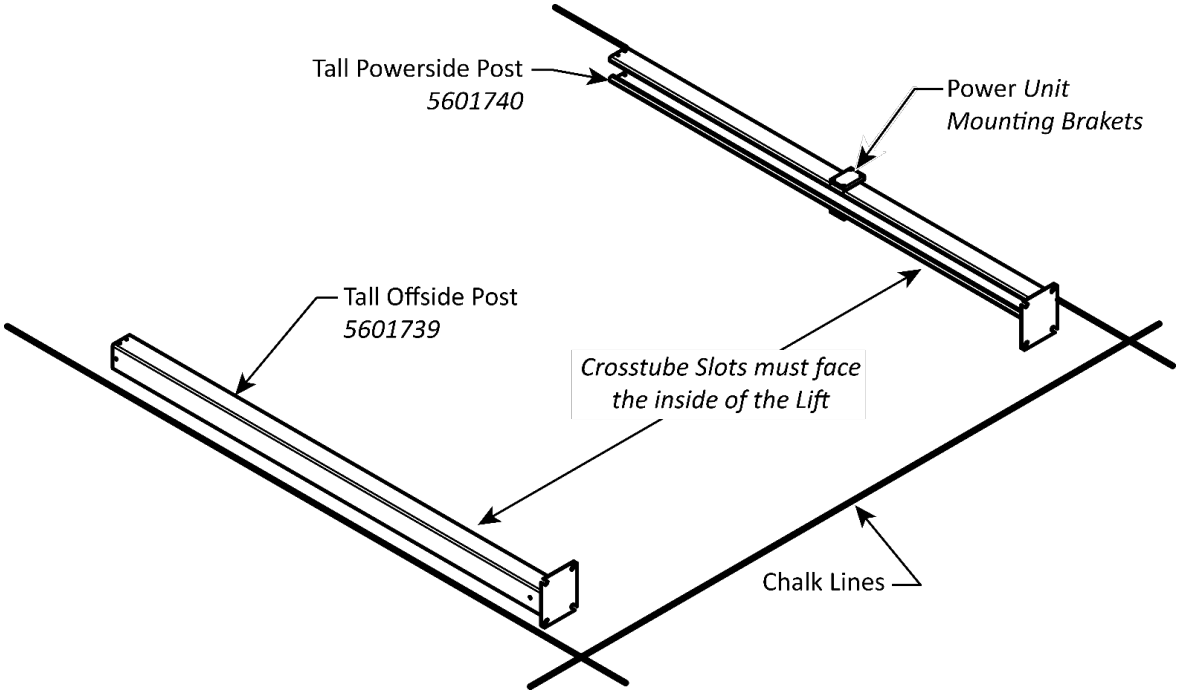

Move the Rear Posts in a position for assembly:

1 Using a Forklift or Shop Crane, move each Post, *one at a time*, to the inside corners of the Chalk Line Guides. ***Do not stand up the Posts yet***; the following procedures are easier to complete if the Posts are laying on the ground.

2 Verify the Crosstube Slots in the Posts are facing to the inside of the Lift.

Installing the Front Crosstubes and Raising the Posts

Important It is possible to install the Crosstubes **incorrectly**. Check carefully.

The following illustration shows the two Front Crosstubes.

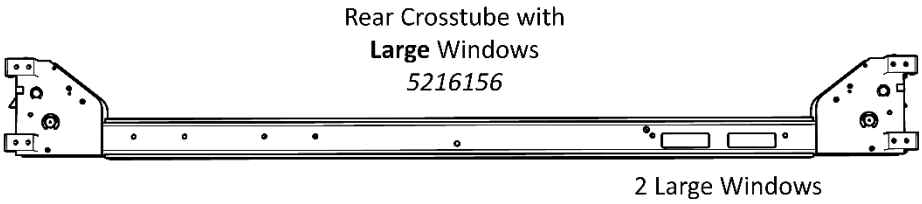

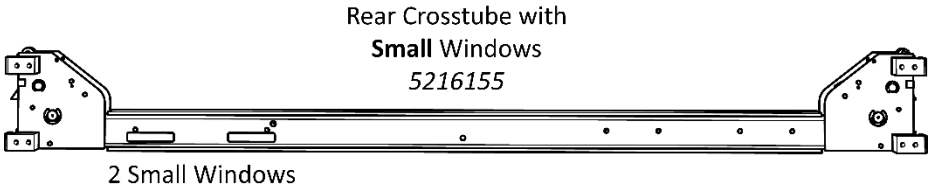

To install the Front Crosstubes:

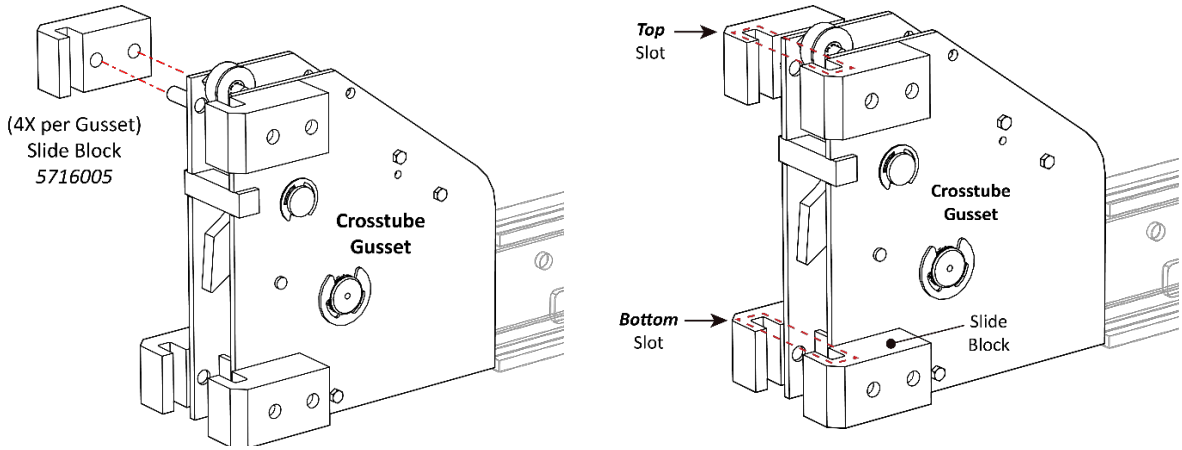

1. Put the black Slide Blocks into place on the outside ends of each Gusset (4 Blocks per Gusset).

   Align the holes in the Slide Blocks into place on the outside ends of the Gusset, then press the Slide Blocks in. Make sure the Slide Blocks are oriented so that they create a Slot when pushed in.

   The four slide Blocks on a Gusset create two Slots. There is one Slot at the top of the Gusset and a second Slot at the bottom; the Safety Lock Ladder must go through both Slots on the Gusset.

⚠ **WARNING** If the Slide Blocks are not correctly installed, then the Slots for the Ladder are not created. In such a case, the Safety Locks will not work correctly, which endangers everyone who uses the Lift.

2. Put the ***FRONT*** Crosstubes into place by doing either of the following:

- Tilt over the three Posts at one end of the Lift (sawhorses or similar), slide the Crosstubes into place, then carefully stand up the Posts. Make sure to put them back in their correct locations inside the Chalk Line Guides.
- Carefully stand up the Posts, use a Forklift or Shop Crane to raise the Crosstube above the top of the two Posts that it goes between, and then slide the Crosstube down to the bottom.

⚠ **WARNING** Use caution when installing the Crosstubes, as the Posts are not anchored in place at this point. Dropping or knocking over the Posts may cause permanent equipment damage or serious personal injury. The Crosstubes and Posts are heavy; do not lift without assistance.

3. ***Raise*** the ***FRONT*** Crosstubes in their ***required*** locations, as shown in the drawing (below).

   The following drawing shows the orientation of Posts and ***FRONT*** Crosstubes; ***just before raising***.

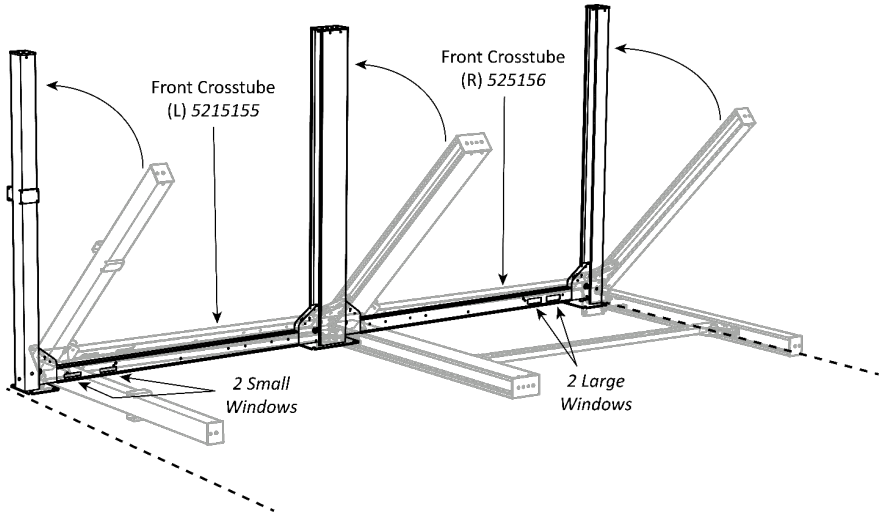

Perform Steps 2 and 3 for the other ***FRONT*** Crosstube.

Installing the *Rear* Crosstubes

Important: It is possible to install the Crosstubes **incorrectly**. Take time to ensure accuracy.

To install the *Rear* Crosstubes:

1. Orient the ***Rear*** Crosstubes in their ***required*** locations.

   Make sure the correct Crosstubes for the Platform have been selected.

2. The Slide Blocks should already be attached to the ***Rear*** Crosstubes. ***If not***, attach as shown below.

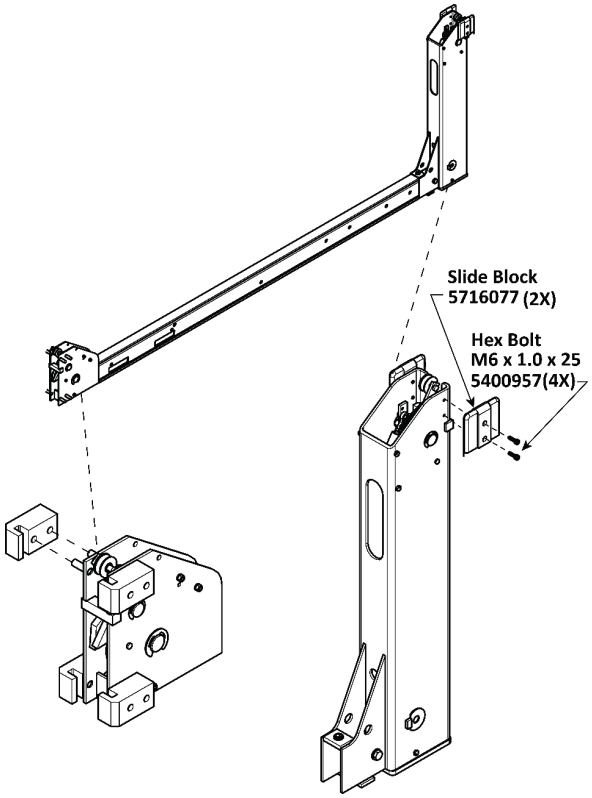

The following graphic shows the two ***REAR*** Crosstubes ***POSITIONED*** to view windows.

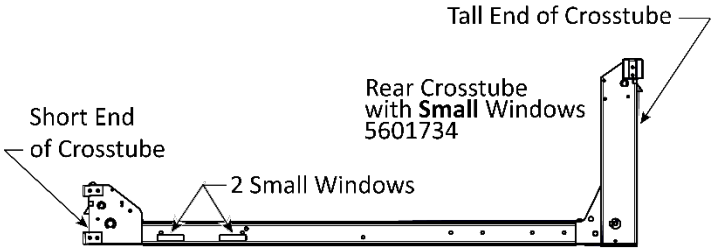

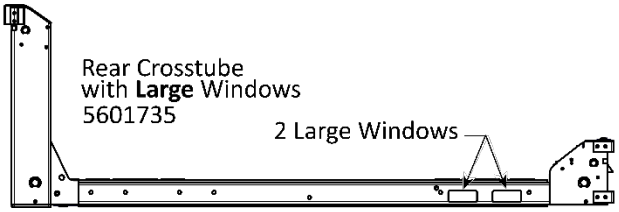

⚠ **WARNING** If the Slide Blocks are not correctly installed, then the Slots for the Safety Ladder are not created. In this case, the Safety Locks will not work correctly, which endangers everyone near the Lift.

3. Carefully raise the Posts to the upright position as noted in the last section.

4. Use a Forklift or Shop Crane to *carefully* lower the Crosstubes into place down by the Baseplates.

REAR assembly. The following illustration shows the correct orientation for the ***REAR*** Crosstubes on the Lift with WINDOWS facing toward Inside the lift.

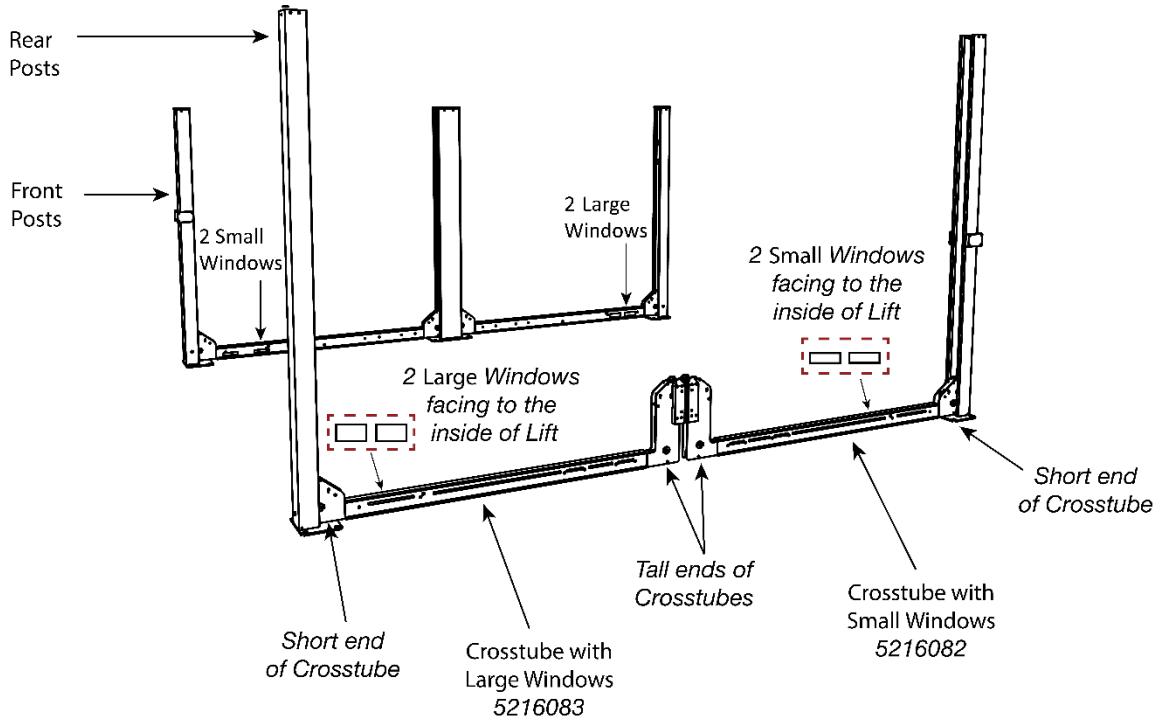

Installing the Top Tube and Short Post

The Top Tube and Short Post are installed on top of the ***REAR*** Posts.

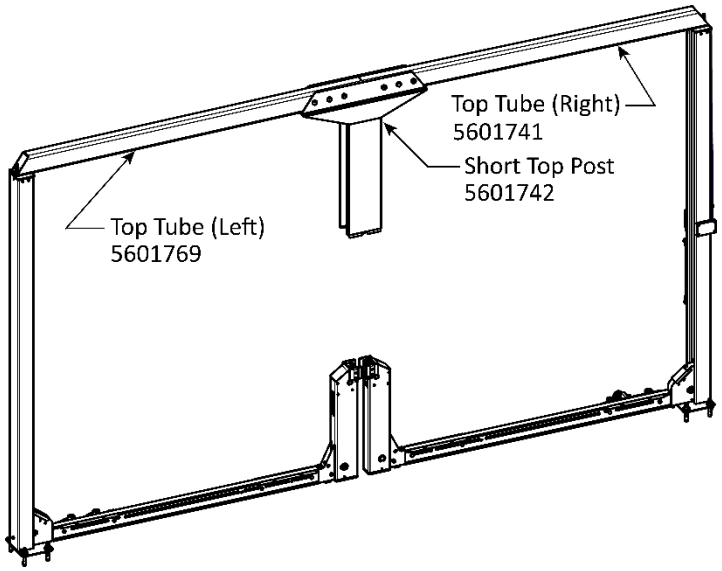

To install the Top Tube and the Short Post:

1. Locate the Top Tube and the Short Post.
2. Using a Forklift or Shop Crane, now raise the Top Tube above the Tall Powerside Post and Tall Post.
3. Attach each end of the Top Tube to the Tall Powerside Post and Tall Post.

4. Secure the Short Post to the Top Tube using the supplied M12 hardware.

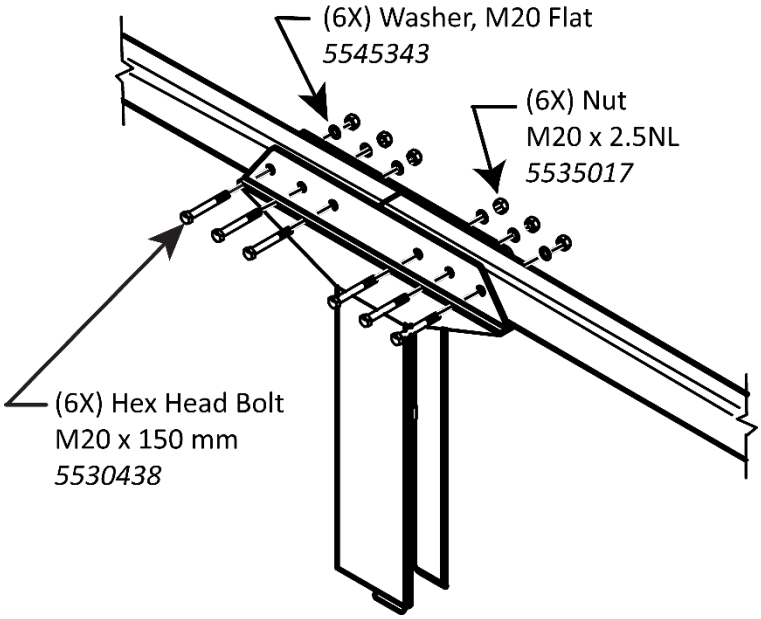

About the Safety Ladders

There are three different lengths of Safety Ladders used on the PL-12000DP, their locations identified by each respective number (1,2, and 3) on the Lift are illustrated below.

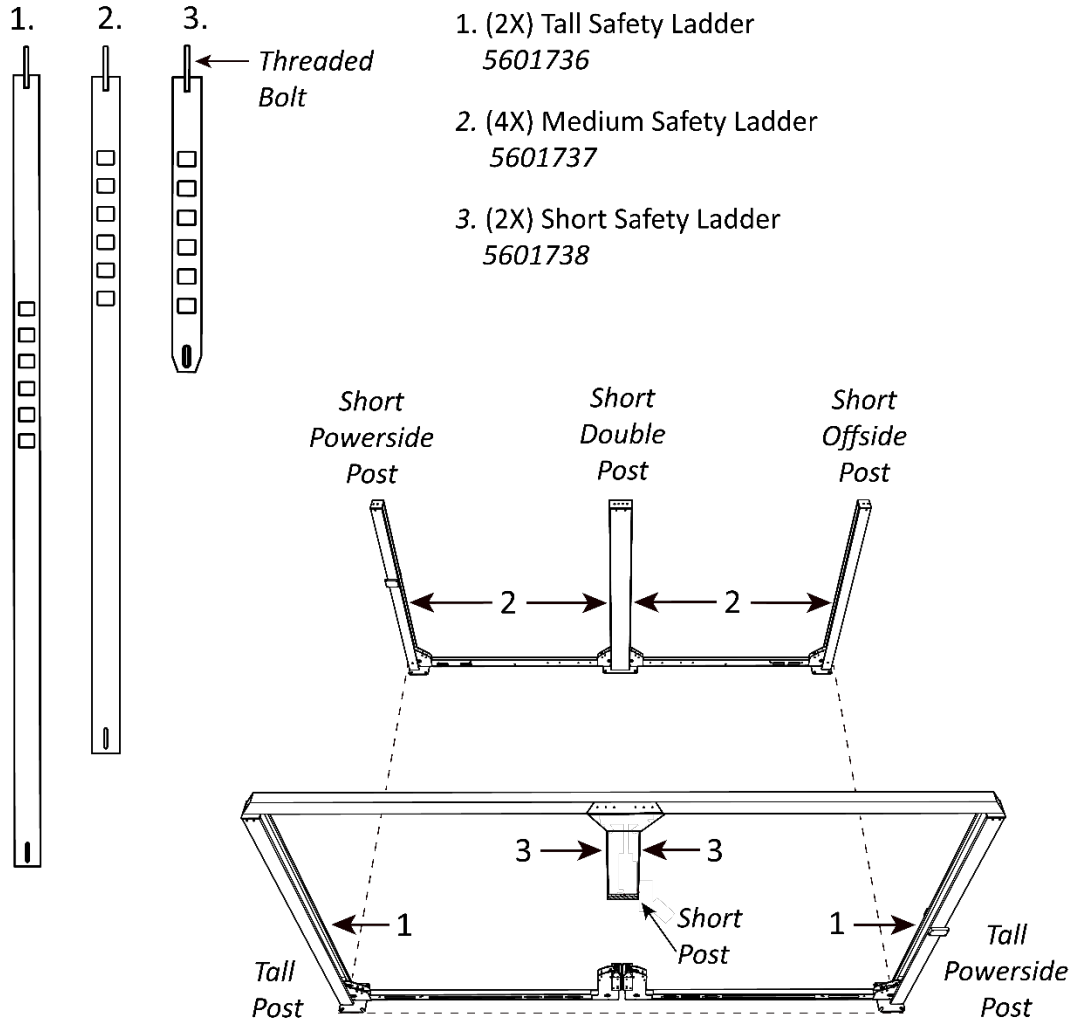

⚠ **WARNING** Make sure to install the Safety Ladders correctly. If they are not, the Safety Locks on your Lift may not hold the weight of a Vehicle, putting anyone underneath the Platforms in danger.

Installing the Safety Ladders and Top Cap

The Ladders are installed inside the Posts, secured at the top and the bottom.

The Top Caps secure the Ladder at the top of each Post and hold the Threaded ends of the Cables.

NOTICE: It is much easier to secure the bottom of the Ladders once the Crosstubes have been raised, so that portion of installing the Ladders is described in **Securing the Ladders**.

⚠ **WARNING** Make sure to install the Ladders correctly. If they are not installed correctly, the Safety Locks on your Lift may not hold the weight of a Vehicle, putting anyone under the Platform in danger.

Slots are created by the Slide Blocks. Not to scale. Not all components are shown.

To install the Ladders and the Top Caps:

1. Select a Ladder and slide it down the back of the respective Post, with the slot-end at the bottom.

   Confirm that the Ladder runs through BOTH Slots on each Gusset. There is a Slot at the ***top*** of the Gusset and another Slot at the ***bottom*** of the Gusset, formed by the Slide Blocks.

⚠ **WARNING** It is ***critical*** that the Ladder runs through ***BOTH*** Slots. If the Ladder misses a Slot ***OR*** the Slide Blocks were not installed correctly, your Safety Locks will ***not*** engage nor function correctly.

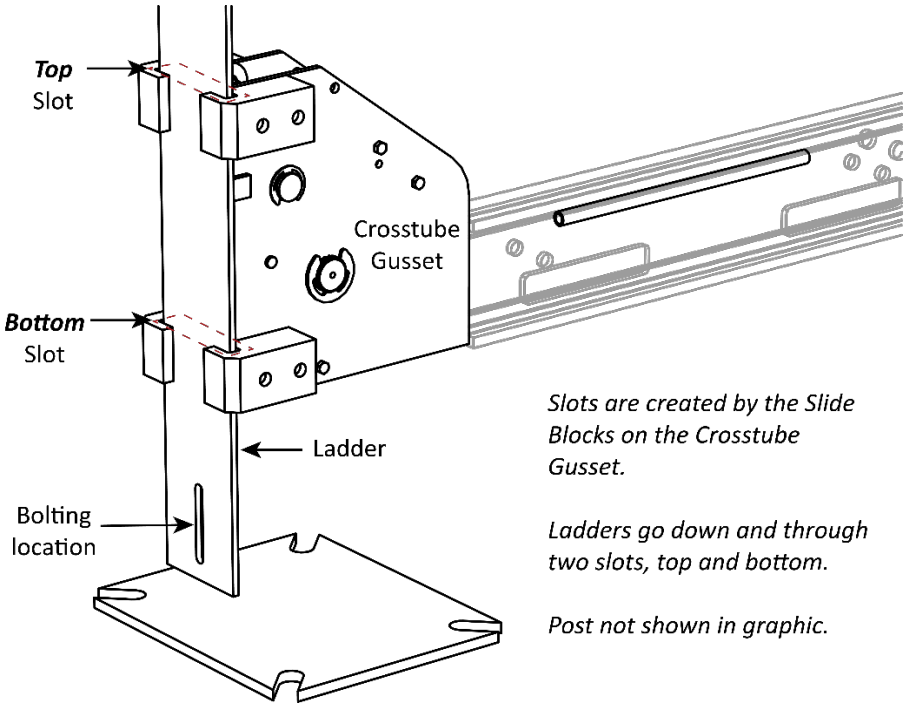

Slots are created by the Slide Blocks on the Crosstube Gusset.

Ladders go down and through two slots, top and bottom.

Post not shown in graphic.

2. ***To adjust the top of the Ladders***, thread a Stop Nut on the Threaded Stud at the top; turning it down ½ in. from the top of the Stud. See following Graphic (Short Powerside Post installation next).

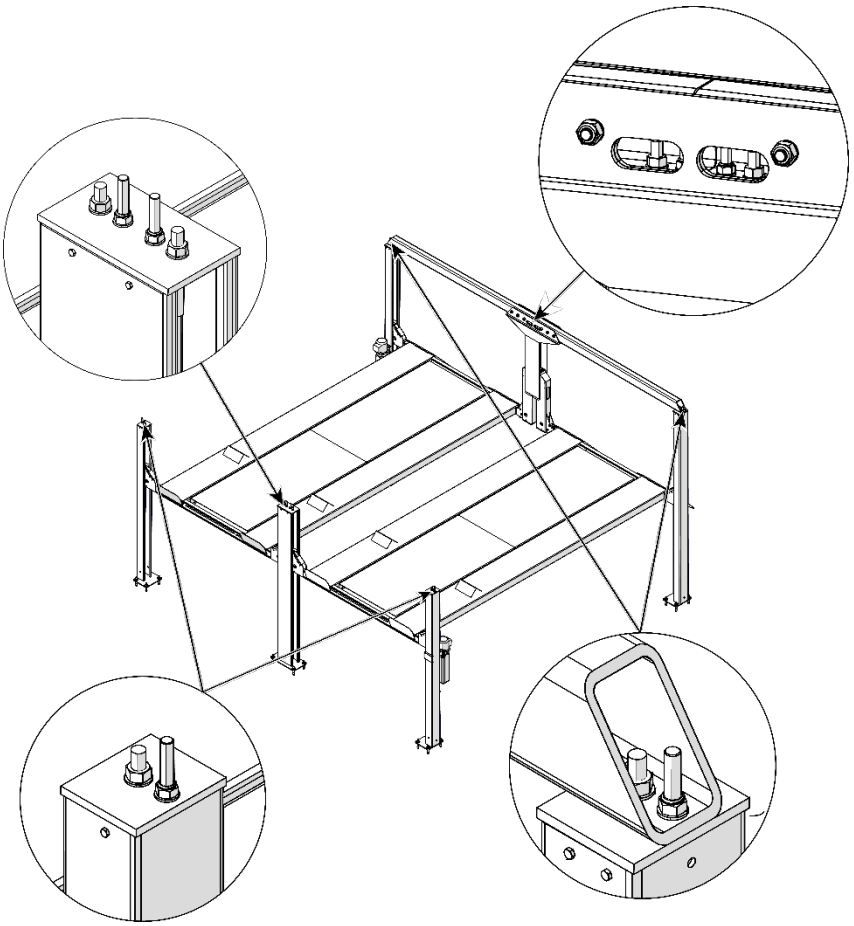

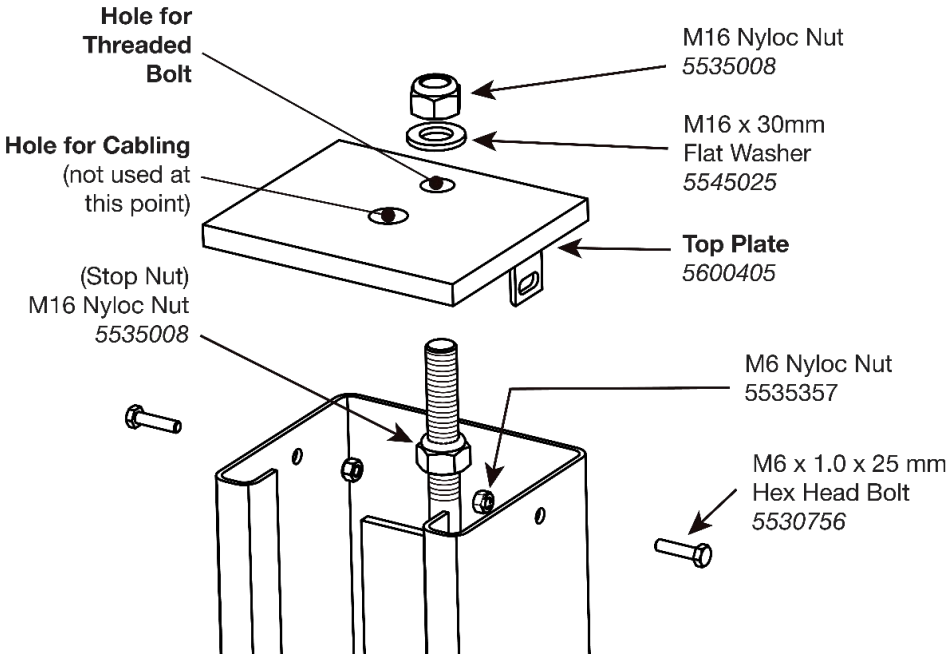

Front View. Not all components shown.

3. Put the Top Cap onto the top of the Post, securing it on the sides with a Hex Head Bolt and a Nyloc Nut on each side of the Top Cap.
4. Move the Stop Nut up until it contacts the underside of the Top Cap, then add a Flat Washer and Nyloc Nut to the top of the Top Cap and tighten it.

NOTICE Only hand tighten at this point, about 1 in. or 25 mm of thread above the top of the Top Nut. ***Firmly tighten at the Final Leveling phase.***

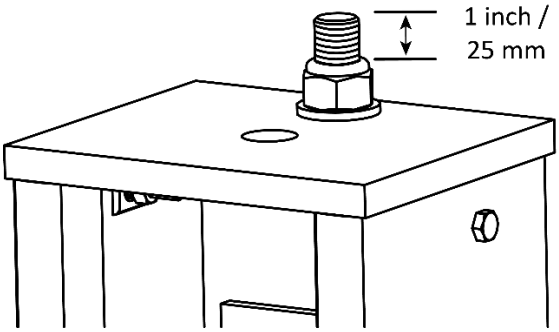

5. Install the remaining Top Caps as outlined.

Raising the Crosstubes in the Posts

Manually raise all Crosstubes (for each Platform) to the same height AND corresponding Safety Lock. For example, if the Front Crosstube is raised to the fourth Safety Lock, then the Rear Crosstube must be placed to the fourth Safety Lock. Thus, producing a level platform.

NOTICE Requires at least **four sawhorses** to aid in completing the installation.

The following illustration shows the Front and Rear Crosstubes resting on sawhorses.

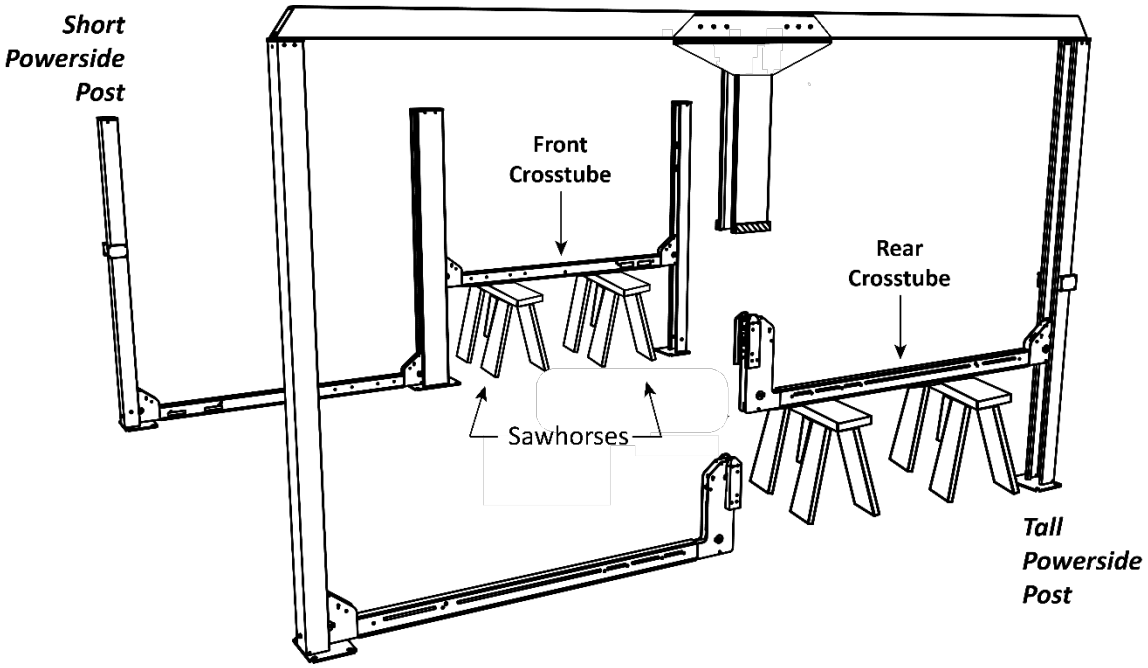

⚠ **WARNING** Use caution when raising the Crosstubes, as the Posts are not anchored in place at this point. Dropping or knocking over the Posts may cause permanent equipment damage or serious personal injury. The Crosstubes and Posts are heavy; do not lift without proper assistance.

To raise the Crosstubes:

1. ***Starting at the front of the Lift***: using a Forklift or Shop Crane, carefully raise the Front Crosstube approximately **3 ft.** / **1 m.** above the ground. Do not remove the Forklift or Shop Crane once the Crosstube is raised.

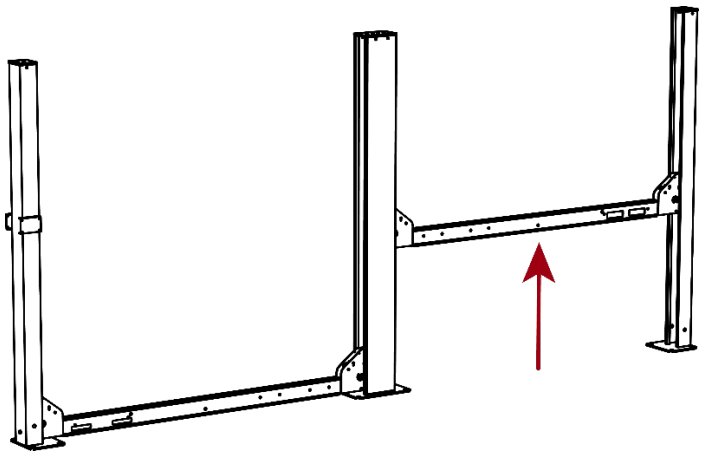

2. Place two sawhorses underneath the Front Crosstube, then carefully lower the Front Crosstube onto the sawhorses. Verify that the Front Crosstube is properly balanced on the sawhorses.

NOTICE The Slack Safeties cannot be engaged during this phase of the installation. This is because the Cables are not in place yet. The Slack Safeties are going to engage when the Crosstubes are manually raised. They will need to be disengaged after the Crosstubes are raised. The Primary Safeties are not impacted; they will engage normally when each Crosstube is manually raised.

3. To disengage the Slack Safeties after raising the Front Crosstube, press the Sheave and/or the weldment (they are connected and will move together) back towards the Ladder and the back of the Post.

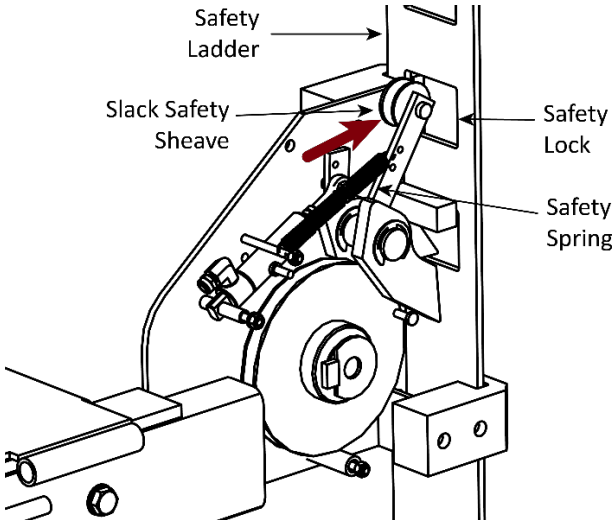

Crosstube components removed for clarity. Not all components shown.

4. Once both Crosstubes are in position, ***all Primary Safeties are engaged***, and the Slack Safeties have been disengaged, continue with the installation.
5. Repeat Steps 1 through 4 for the Rear Crosstube at the Rear of the Lift.

Securing the Safety Ladders

After the Crosstubes have been raised, secure the Ladders at the bottom of the Post. The following procedure assumes that the Ladders are in place and secured at the top. If this is not the case, return to **Installing the Ladders and Top Cap**.

The following illustration shows the connections.

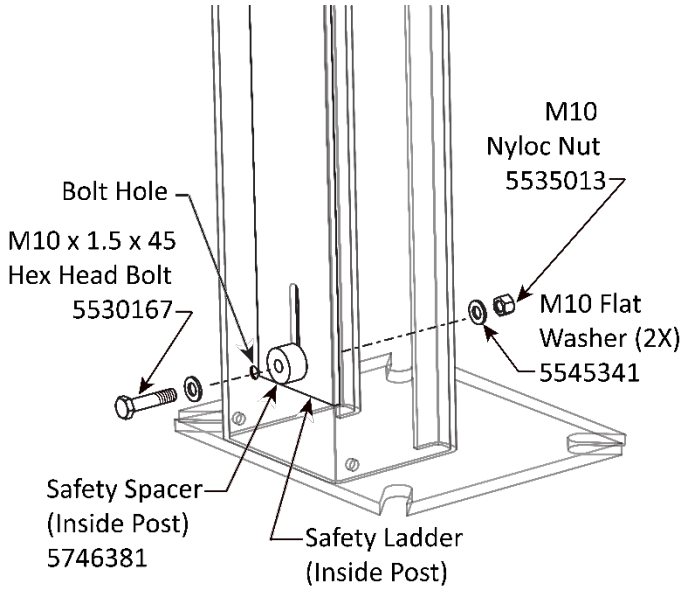

Corner Posts

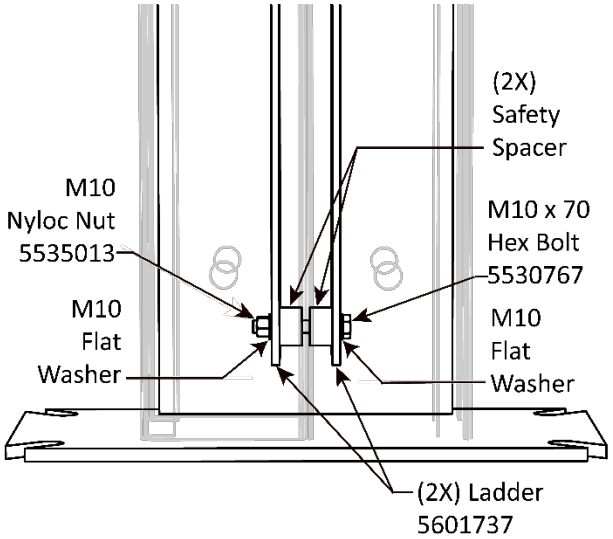

Center Posts

To secure the Ladders:

1. As outlined in the figure above (for the respective post) select the appropriate Bolt, flat Washer, Spacer, second flat Washer, and Nut.
2. Place the Washer onto the bolt, then insert the Bolt through the hole in the Post.

   Make sure the Ladders when installed at the top plate go in the Outer Slots of the Post.
3. Put the Spacer into position between the Ladder and the back of the Post, lace the Bolt through the Spacer, and then through the back of the Post.

   To secure the Ladders at the top plate, push the Bolt through the Spacer, Ladder, Stop Block, and then through the inside of the Post.
4. Take the second Washer and the Nut and install them on the end of the Bolt; secure the Nut.
5. Perform the same procedure to secure the remaining Ladders on the Lift.

NOTICE Do not securely tighten the Top Nut at the top of the Top Cap at this point. The Top Nut and the Stop Nut will be used later to make sure the Lift is level. They will be securely tightened after final leveling of the Lift; See **Final Leveling** for additional information.

⚠ **WARNING** Make sure that all eight Ladders are correctly installed and secured. If the Ladder misses a Slot in the Slide Blocks, your Safety Locks will ***not*** engage correctly, which is a danger to anyone under the Platform that is holding a Vehicle, or around it.

Removing the Cable Sheaves

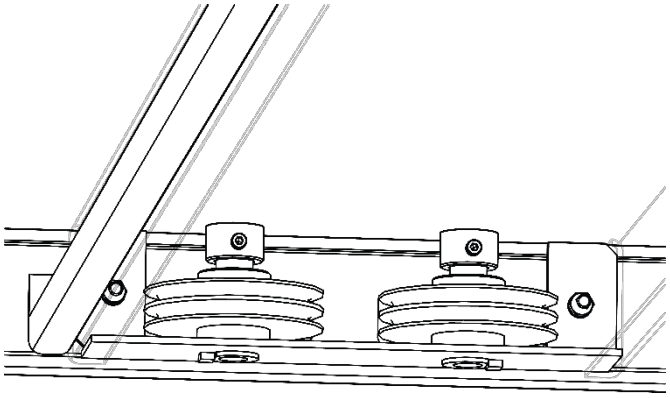

In order to route the Lifting Cables, begin by first removing the Cable Sheaves (example above) and Gusset Sheaves in crosstubes.

When removing the Sheaves, keep all the components together. They will be reinstalled at the same location, using the same components; do not mix the components for each Platform.

Installing the Runways

Your Multi-Platform Lift has two sets of Runways. Each Platform has the following:

- **Powerside Runway**: Holds the Hydraulic Cylinder underneath it. Has an opening on the outside that allows routing the Hydraulic Hose, Air Lines, and Return Line. Cable routing starts under the Powerside Runway.
- **Offside Runway**: The Offside Runway does not have a Hydraulic Cylinder under it, nor are there any Cables under it.

Verify this by:

- Looking under the Runways. Only the Powerside Runways have a Hydraulic Cylinder underneath.
- Finding the ~1.5-in. wide hole in the side of the Powerside Runway at the Power Post for the Flex Tube (which holds the Air, Return, and Hydraulic Hoses).

The following illustration shows the correct orientation for the Powerside and Offside Runway.

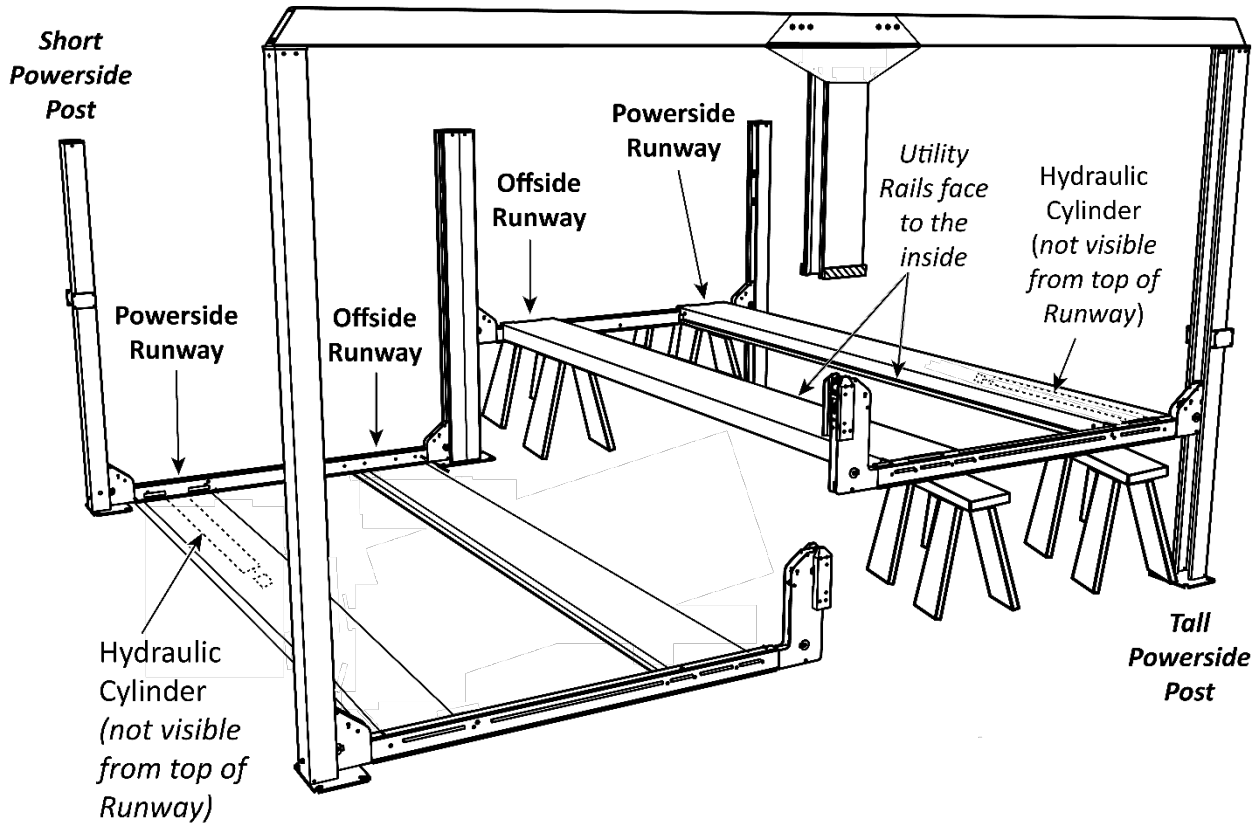

Top View. Not to scale. Not all components shown.

Use a suitable Forklift or Shop Crane with capable helpers ready, to raise the Runways and move them into position.

⚠ **WARNING** Pay close attention when moving the Runways into position; they are very heavy and very long, and could shift position or fall, potentially causing serious injury.

To install the Runways:

1. Correctly orient the Powerside Runway and the Offside Runway.
2. On the underside of the Powerside Runway, make sure the Sheaves have been removed.

   See **Removing the Cable Sheaves** for more information.
3. Use a Forklift or Shop Crane to pick up the Powerside Runway and move it into place on the Powerside of the Lift. Carefully lower the Powerside Runway onto the Crosstubes resting on the sawhorses.

   Make sure the Utility Rail is facing the inside of the Lift.
4. Bolt the Powerside Runway into place, two M12 Hex Head Bolts on each end going into the Crosstubes.
5. Using a Forklift or Shop Crane, pick up the Offside Runway and position it in the wide setting. Carefully lower the Powerside Runway onto the Crosstubes resting on the sawhorses.

   Make sure the Utility Rail is facing the inside of the Lift.

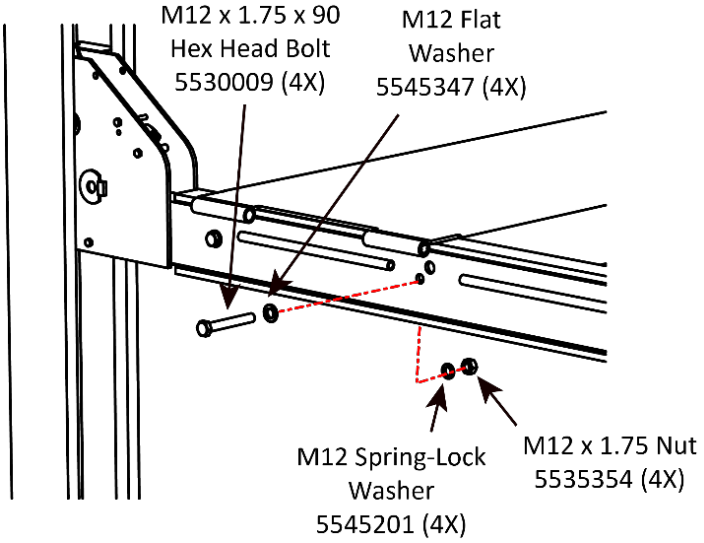

Front view. Not all components are shown.

6. Bolt the Offside Runway into place, using four more M12 Hex Head Bolts and Lock Washers.
7. Make sure the Primary Safety Locks are engaged.

   Do not allow anyone under the Runways unless the Safety Locks are engaged.

Four-Post Lift Flex Tube Kit

The following is to provide installation guidance for the Flex Tube Kit on all four-post Lifts manufactured by BendPak Inc. The Flex Tube is designed to route and protect Hydraulic, Pneumatic and in some cases Electrical lines from becoming entrapped and damaged under a Lift Platform.

Installing the Flex Tube Kit

The Flex Tube Kit in the table below consists of a Flexible Tube (5570053), two Connectors (5555555), and two Plastic Nuts (5535050).

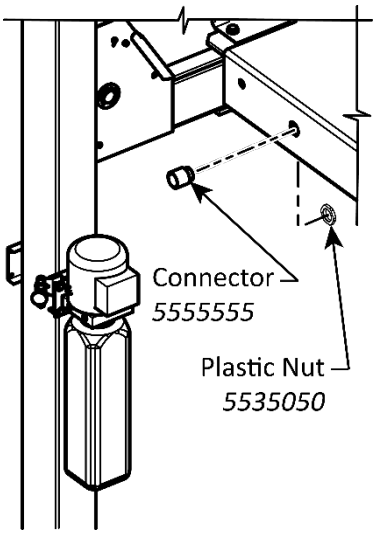

To install the Flex Tube Kit:

1. Move the Lift Platforms to the Top Lock as described in the Installation Manual.
2. Install one Connector on the Powerside Platform opening near the Power Unit and secure. Refer to the figure on the right.
3. Install one end of the Flex Tube into the connector. Refer to the figure below.

Flex Tube Kit Table	
Flex Tube Kit Part Number	Flex Tube Length Supplied
5216139	Up to 2,000 mm

4. Cut so as to provide an appropriate “service-loop” with the flex tube. Then measure twice, mark, then cut the Flex Tube to the correct length indicated ±25mm (±1 in).
5. The free end of Flex Tube hangs in place for now.

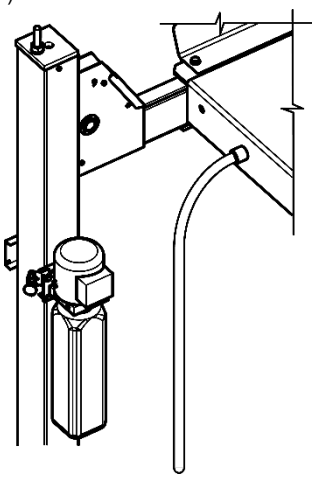

Note: The ideal Flex Tube length has a moderate service loop to keep the lines away from the moving platform.

Routing the Lifting Cables

Before routing the Lifting Cables on your Lift, understand the following:

- Each Platform uses four Lifting Cables. Therefore, all Cables are specific lengths and only allow one correct connection and routing.
- All four Lifting Cables include both a Button-end and a Threaded-end. The Threaded end has a label attached that identifies the Lift model that the specific Cable is designed for, the part number (if needed), and the respective length (millimeters).

Button end.
Attaches at
Retaining Block or
Anchor Plate

Threaded end.
Attaches at
top of Post

- The Threaded end of each Lifting Cable attaches to its paired Cable Sheave (or Sheaves) and then is routed to a Post. There are two types of Sheaves. These are Cable Sheaves and Gusset Sheaves.
- A Retaining Plate secures the Button ends of the Cables in place after all four Cables are installed. ***Do not take the Retaining Plate off to install the Cables.*** Instead, loosen it so that it can slip to the Button end of the Cable into the correct slot.
- Cable Sheaves and Gusset Sheaves arrive installed but must be removed prior to installing the Runways. These are installed as each Lifting Cable is routed.
- Each Platform has a set of Double Cable Sheaves in the Crosstube with Large Windows.
- The two Lifting Cables that share a Double Cable Sheave (Lifting Cables A and C, then Lifting Cables B and D) are routed around the same time in order to reinstall the Double Cable Sheaves.
- Each Crosstube Gusset has a Cable Lock Pin underneath the Gusset Sheave. Each Cable Lock Pin needs to be removed when routing the Cable to its Post. Reinstall the Cable Lock Pin once the Cable is in place.
- The Cable Lock Pin prevents the Cable from coming out; there is not enough space between the bottom of the Gusset Sheave and the Cable Lock Pin for the Cable to slip out.

- In the following drawings, the Lifting Cables and Cable Sheaves are labeled A, B, C, and D. These letters are ***not*** on the label on the Threaded end. Match the Cable letter with the provided length information.

The following graphic details the cable routing and identifications for both Platforms (not all components shown).

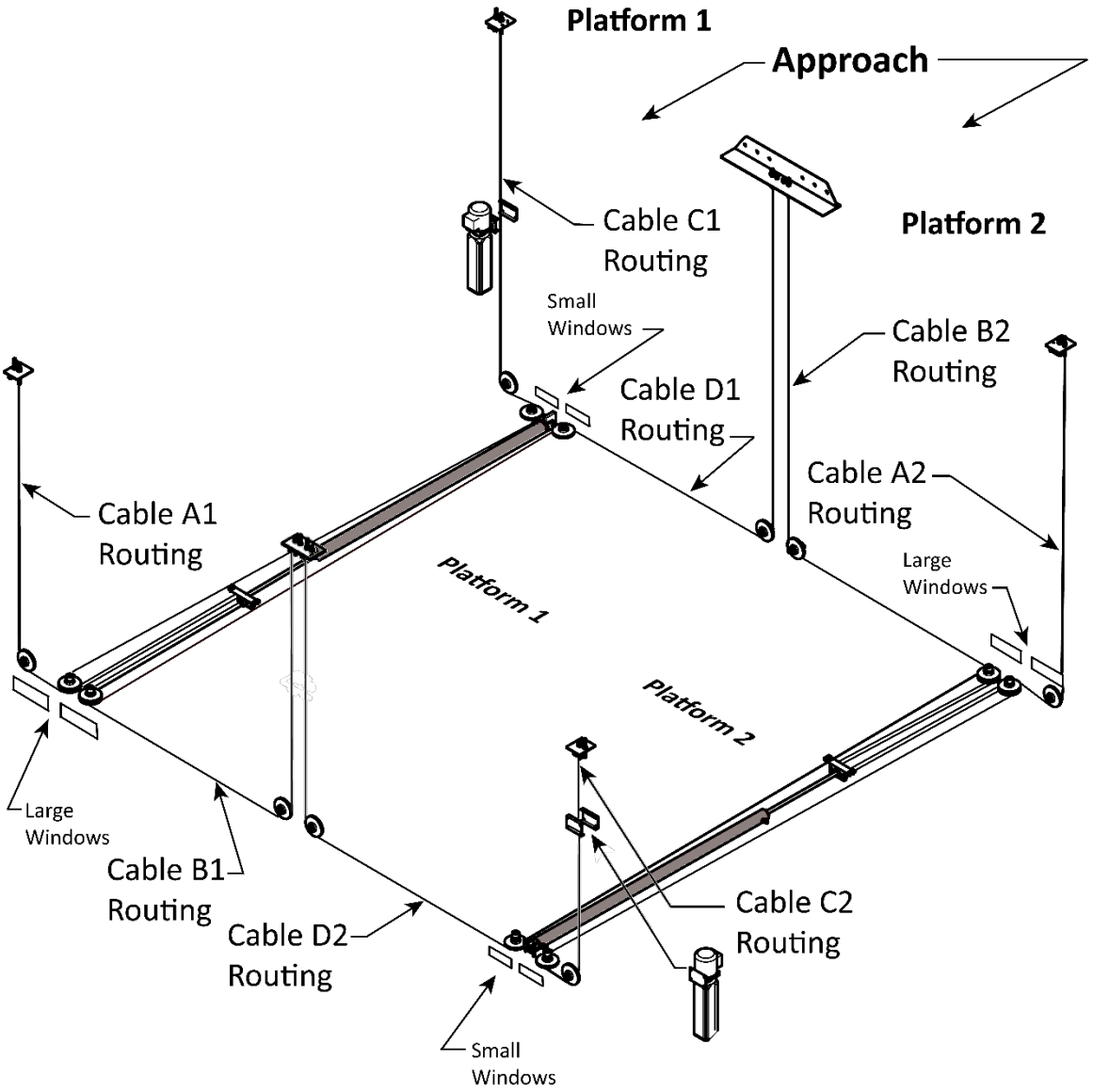

Lifting Cables for the PL-12000DP

Platform 1		
Cable	**Length**	**Part Number**
Cable A1	128.50 in. / 3,263 mm	5595478
Cable B1	192.25 in. / 4,883 mm.	5595909
Cable C1	341.00 in. / 8,659 mm.	5595762
Cable D1	404.15 in. / 10,265 mm.	5595718
Platform 2		
Cable	**Length**	**Part Number**
Cable A2	153.50 in. / 3,900 mm.	5595712
Cable B2	217.50 in. / 5,523 mm	5595715
Cable C2	315.25 in. / 8,007 mm	5595479
Cable D2	378.50 in. / 9,613 mm	5595919

Lifting Cables for the PL-12000DPS

Platform 1		
Cable	**Length**	**Part Number**
Cable A1	116.50 in. / 2,958 mm.	5595474
Cable B1	180.25 in. / 4,578 mm.	5595906
Cable C1	305 in. / 7,746 mm.	5595763
Cable D1	368.50 in. / 9,358 mm.	5595736
Platform 2		
Cable	**Length**	**Part Number**
Cable A2	141.75 in. / 3,598 mm.	5595741
Cable B2	205.50 in. / 5,218 mm.	5595739
Cable C2	279.25 in. / 7,094 mm.	5595457
Cable D2	342.75 in. / 8,706 mm.	5595916

The Retaining Block holds the Button Ends of the Cables in place; once installed. ***Do not remove the Cable Retaining Plate or the Cable Retaining Block off to install the Cables***; instead, loosen it to allow slipping the Button end of the Cable into the correct slot.

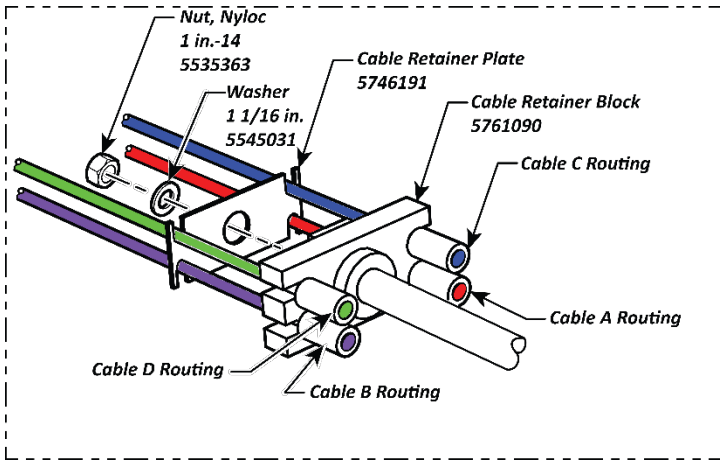

Before routing the Cables, extend the Hydraulic Cylinder's Piston and Retaining Plate. A suitable "Come-Along" and/or compressed air applied from an Air Blow Gun into the Hydraulic Cylinder's air pressure orifice can be used to assist.

To route Lifting Cables A and C:

1. ***Starting with Lifting Cable A***, move the entire cable to just under the Large Window that it laces through, near the bottom of Post A.

   Check the cable's label to ensure the correct Lifting Cable is selected.

2. Remove the Nut and Washer from the Threaded End (place aside).
3. Route the Threaded End of Lifting Cable A into its Large Window on the Crosstube, push it towards Post A, and then pull the Threaded End out of the Crosstube at the bottom of the Gusset.
4. Route the Threaded End of Lifting Cable A ***under*** where the Gusset Sheave will go when it is reinstalled, then route it up towards the top of the Post past the top of the Crosstube Gusset.

   When routing the Cable up, it must lace between the Gusset Sheave and Slack Safety Sheave, as shown below.

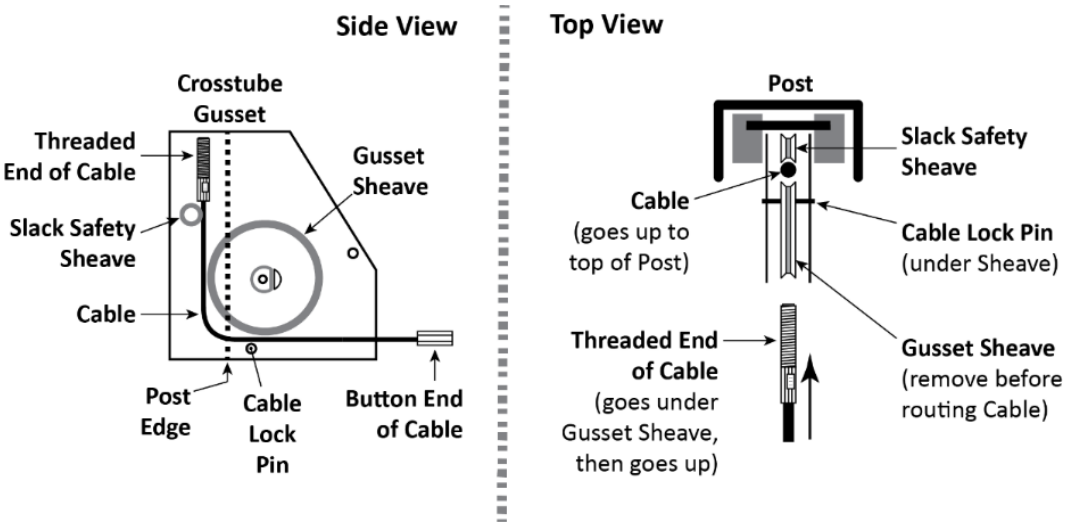

Important: Also note; when routing a Lifting Cable through the Cross Tube (figure below) it must first lace ***under*** the Runway Mounting Bolts and behind where the Cross Tube Sheaves will next install and operate. Then when the Cable (that runs on the Sheave closest to the Post) is routed up towards the top of the Post, it must run under and up where the Gusset Sheave will be installed, and up to where the Slack Safety Sheave already is. If Cables are ***not routed exactly along these pathways***, the runway operation and Slack Safeties will ***not*** function correctly.

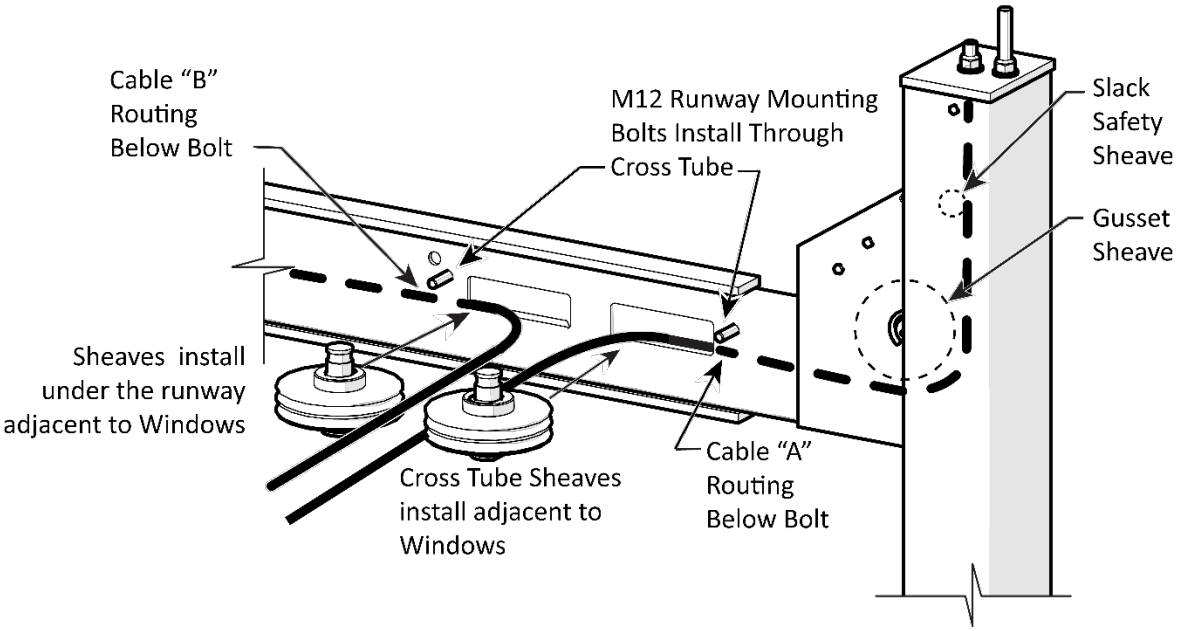

Do not scale. Some components removed for clarity.

5. With the Lifting Cable properly in place, lubricate the Sheave Pin with red lithium grease and reinstall the Gusset Sheave and the Cable Lock Pin in Post A.
6. Make sure Lifting Cable A is correctly positioned: in between the Gusset Sheave and the Slack Safety Sheave, with the Cable Lock Pin ***under*** it.
7. Push the Threaded End of Lifting Cable A up to and through the Top Cap (at the top of the Post) and ***hand tighten*** it in place with the Nut and Washer removed earlier.

   Hand tighten the Nut at this point so that there is little play in the cabling. Installer will adjust all four Nuts later in the installation procedure.
8. ***Switching to Lifting Cable C***, repeat Steps 1 through 7 for Lifting Cable C, starting at the Small Window near the bottom of Post C (the Power Post).
9. Reinstall the Cable Sheave and then make sure Lifting Cable C is correctly positioned in the Cable Sheave in the Small Window.
10. Under the Powerside Runway, move the rest of Lifting Cable C back towards the Crosstube with Large Windows.
11. Push Lifting Cables A and C into the Large Window where the Double Cable Sheave goes and pull the Button ends towards the Retaining Plate.
12. With the Cables in place in the Large Window, lubricate the Sheave Pins with red lithium grease and reinstall the Double Cable Sheave.

    Make sure Lifting Cable A rides in the bottom Sheave, and Cable C is in the top Sheave.

    The following drawing shows how to route the Lifting Cables around the Double Cable Sheaves.

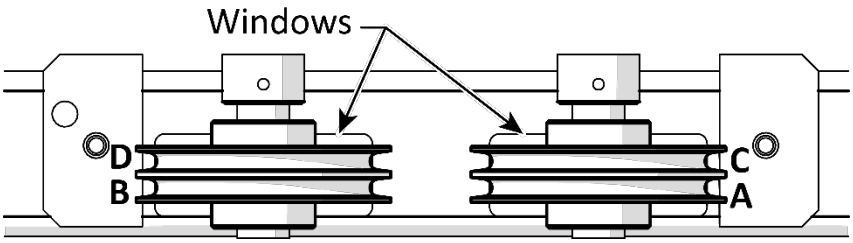

Drawing shows a front view of the Cable/Cable Sheave pairs in the Crosstube with Large Windows. Not all components shown. Not to scale.

13. Near the Hydraulic Cylinder, loosen the Retaining Plate enough to allow room to slip the Button End of each Cable into its spot on the Retaining Block.

    Do not remove the Retaining Plate!

14. Pull the Button Ends of Lifting Cables A and C back towards the middle of the Runway, past the Retaining Plate, and into its slot on the Retaining Block.

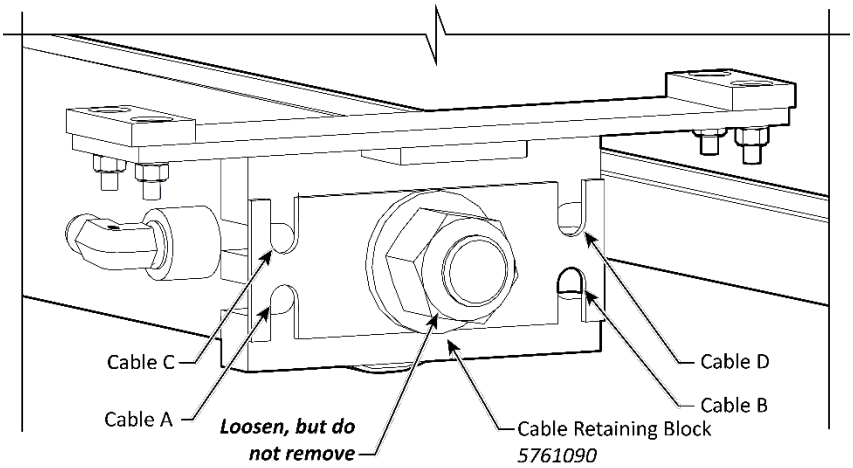

Drawing shows a front view of the Retaining Block, facing towards the Crosstube with ***Large*** *Windows*.

Note Routing Lifting Cables B and D is the same process as routing Lifting Cables A and C, just to the other two Posts and using a different set of Sheaves. Refer to the drawings in the previous section.

Working with Compression Fittings and Tubing

Your Lift comes with a roll of ¼ in., black, polyethylene Tubing (also called Poly-Flo® Tubing) that is used with Compression Fittings in two ways: for the Return Line and for the Air Lines on each Platform.

Important: While both lines use Tubing and Compression Fittings, the Return Line and Air Lines are used for completely separate purposes; do not connect the two together.

Note: Compression Fittings are different from Hydraulic Fittings. This section covers Compression Fittings only.

Note: Tighten all Elbow Fittings so that they are correctly positioned (clocked) to allow adjoining hydraulic or air line hose fittings to properly align.

The components involved with Compression Fittings include:

- **¼ in., Black, Polyethylene Tubing**. Use a single piece of Tubing for the Return Line. The Air Lines require multiple Tubing pieces. Create the Tubing pieces for both the Return Line and the Air Lines by cutting lengths from the long roll of Tubing supplied with the Lift.
- **Elbow Compression Fittings**. Each Return Line uses an Elbow Compression Fitting on the Hydraulic Cylinder and then another Elbow Compression Fitting on the Power Unit.

- **Tee Compression Fittings**. Each Platform requires three Tee Compression Fittings for the Air Lines.
- **Nuts, Ferrules, Rods, and Threads**. Each connector on Elbow and Tee Compression Fittings has a Nut, Ferrule, Rod, and Threads. The Nut holds the Tubing and Fitting together. The Ferrule compresses as the Nut tightens on the Threads to make a secure connection. The Rod goes inside the Tubing so that nothing leaks out.

The following drawing shows the components of a connector on a Tee Compression Fitting.

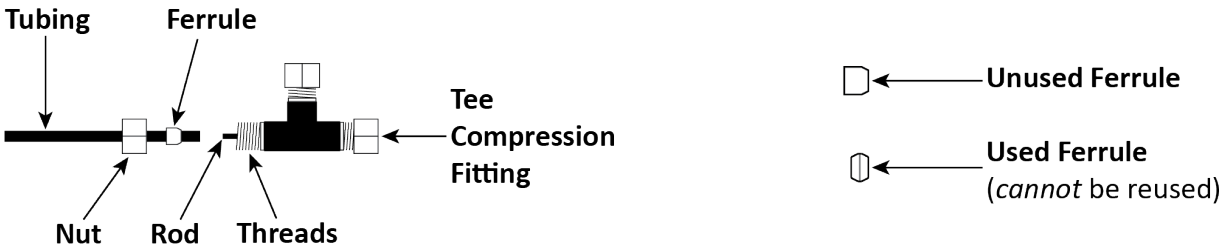

Important: ***Ferrules should only be tightened once***. When tightening the Nut on the Threads, the Ferrule compresses to a self-fitting shape; best to not reuse.

To connect Tubing to a Compression Fitting:

1. Push the Tubing through the Nut, the Ferrule, and over the Rod.
   Gently push the Tubing to go a little way over the Rod. The Tubing must go through the Ferrule and over the Rod.
2. Slide the Nut on the Tubing ***away from the Fitting***; if the Nut is still on the Threads, unscrew it from the Threads and then slide it away from the Fitting. See the figure above.
3. Slide the Ferrule over the Tubing, away from the Fitting and towards the Nut.
4. With the Nut and the Ferrule out of the way, push the Tubing farther over the Rod until it stops.
5. Slide the Ferrule and the Nut back to the Threads on the Fitting.

   The Ferrule routes around the Rod and under the Threads. The Nut tightens onto the Threads.
6. Tighten the Nut.

Installing the Air Lines

The Air Lines use air pressure to disengage the Safety Locks in each Post to lower the Runways. ***It is your responsibility to supply on site compressed air supply (minimum of 75 PSI)***.

Install the ¼ in., black, polyethylene Tubing that came with the Lift and three Air Line Tee Compression Fittings to install the Air Lines.

⚠ **CAUTION** Do not allow the air supply to exceed 150 psi; otherwise, the Air Lines could burst, or the Safety Locks may malfunction.

⚠ **CAUTION** Do ***not*** confuse the Air Lines with the Return Line. They use the same Tubing and similar-looking connectors, but they are used for completely different functions; the two systems cannot be connected to each other.

The Air Line Elbow Connectors on the Crosstube Gussets come installed from the factory.

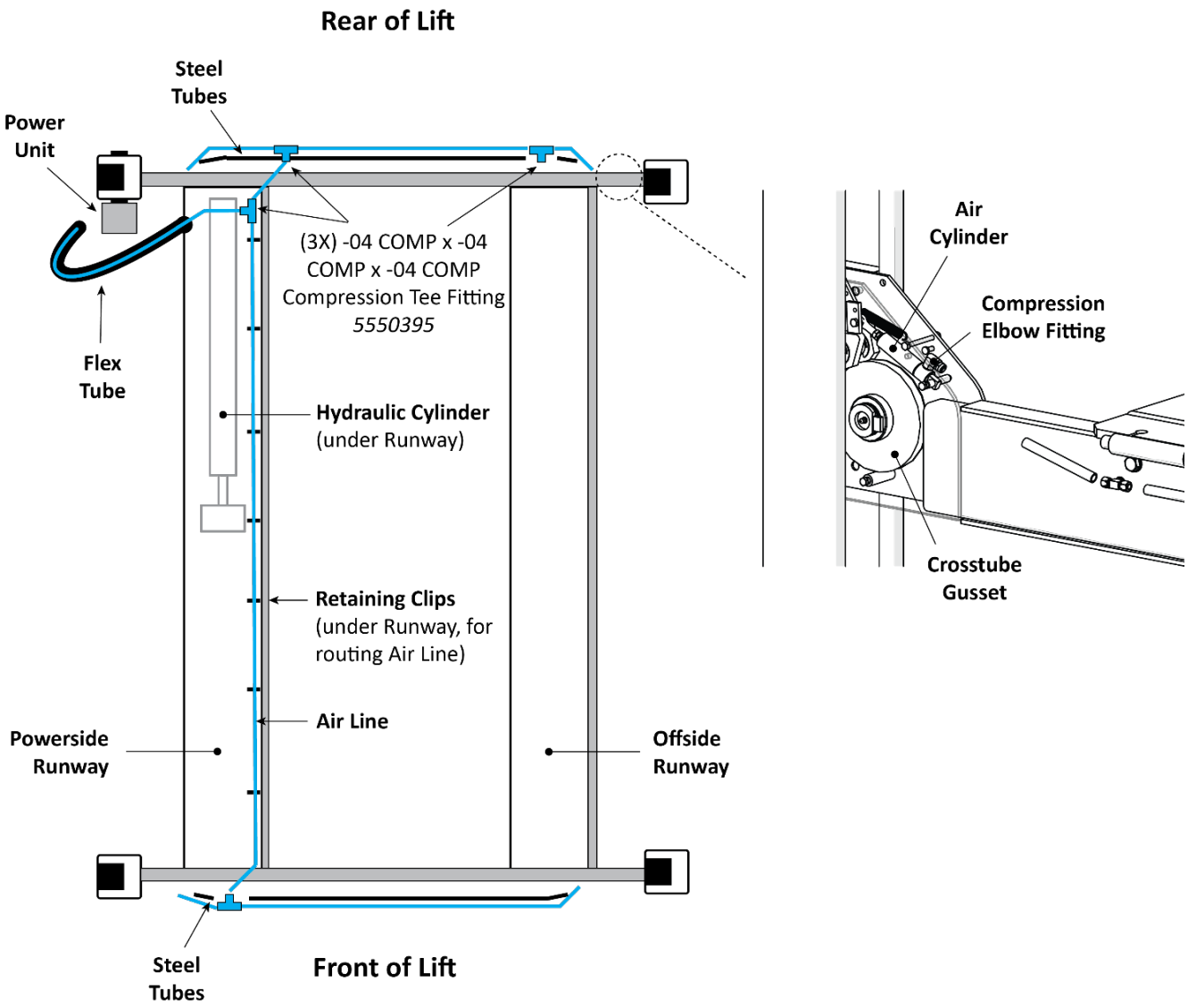

Drawing not to scale. Some components not shown. Air Lines shown outside Steel Tubes for clarity.

To install the Air Lines:

1. Locate the roll of supplied ¼ in. black, polyethylene Tubing, and three Tee Compression Fittings.

Measure the distances for each of the seven (7) Tubing pieces for the Air Lines.

Important: Cut the Tubing piece that will route through the Flex Tube to the Platform long enough so it will not pull tight when the Platform is raised. ***Flex Tube will be final installed later.***

2. Cut seven pieces of Tubing to the measured lengths from the roll of Tubing.

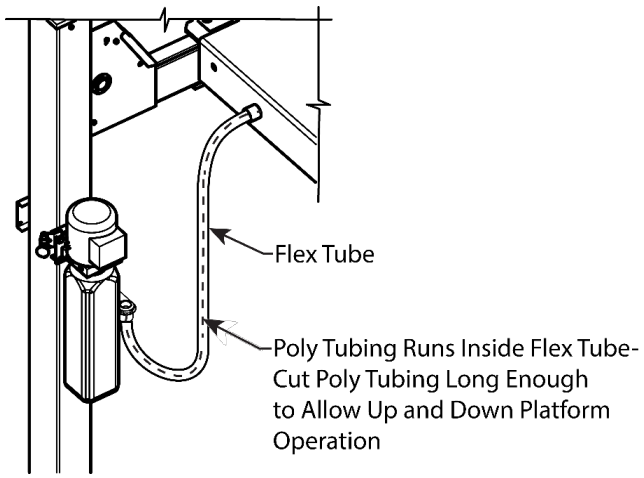

3. Connect the various pieces of Tubing to the Tee Compression Fittings on the Lift, making sure to route the Tubing section through the Retaining Rings along the inside of the Runway.

   Make sure to position the Tee Compression Fittings as shown in the drawing.

   ⚠ **WARNING** Make sure to route the Tubing sections on the ***outside*** ends of the Front and Rear Crosstubes through the Steel Tubes on the ends of the Crosstubes. This keeps the Tubing and the Tee Connectors from being disturbed as the Lift is used. This is important, because if the Air Lines are accidently pulled, the Safety Locks on the Lift may not work correctly. If the Tubing has become disconnected from a Tee Fitting, take the Lift out of service, and repair the Air Lines.

   Refer to **Working with Compression Fittings and Tubing** for more information about connecting the Tubing to the Tee Compression Fittings.

4. Leave the Power Unit end of the Air Line hanging out of the Flex Tube opening for now. The Flex Tube, and the Air Line will be connected to a Tee Fitting and the Pushbutton Air Valve later in the procedure.

3 Levels of Suggested Air Compressors for HD-9 Operation				
Model Level	**Service Size**	**Air Tank Volume**	**CFM**	**Minimum Operational PSI**
Good		3 Gallon Min.	3 to 25	50
Better	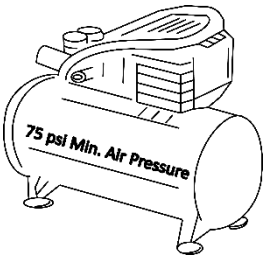	10 Gallon Min.	3 to 25	50
Best	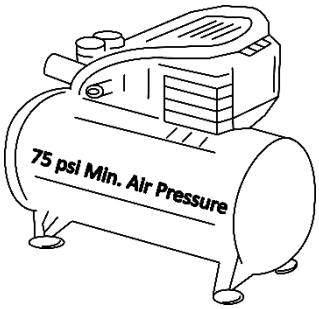	20 Gallon Min.	3 to 25	50

IMPORTANT! PLEASE READ NOW

Hydraulic Fluid Contamination

Hydraulic Fluid Contamination poses a serious issue for your Lift; contaminants such as water, dirt, or other debris can get into the Hydraulic Hoses and Fittings on the Lift, making your new Lift inoperable.

Your Lift is shipped with clean components; however, BendPak strongly recommends taking secondary precautions and cleaning all Hydraulic Hoses and Fittings prior to making connections. It is better and less costly to take these extra steps now to avoid taking the Lift out of service later to fix issues that could have been prevented at the time of installation.

Cleaning Hydraulic Hoses and Fittings:

- **Compressed Air**. Use an air compressor to blow out contaminants from each Hydraulic Hose and Fitting prior to installation. Clean, dry air is preferred. Wear eye protection (safety glasses, goggles, or face shield) when using compressed air for cleaning. Never point an air hose nozzle at any part of yourself or any other person.
- **Fluid Flushing**. As long as the Hydraulic Fluid is clean and compatible with the system fluid, flush Hoses and Fittings to create turbulent flow and remove particulates. Always ensure that the fluid itself is contaminant-free.

Some additional steps that will help keep the Hydraulic Fluid clean:

- **Remove old thread seal tape**. Some ports on the Hydraulic Cylinders are shipped with temporary plugs secured with thread seal tape, so make sure to thoroughly remove any leftover thread seal tape that may inadvertently enter the Hydraulic System.
- **Use liquid thread sealant only**. Teflon paste-type thread sealant or Loctite™ 5452 thread sealant is recommended for all NPT Fittings. Do not overtighten NPT Fittings or they may crack. Never use thread seal tape on JIC Fittings or ORB O-Ring Fittings.
- **Always use clean equipment**. If a dirty bucket or funnel to transfer the Hydraulic Fluid into the Hydraulic Fluid Reservoir is used, the contaminants will likely be introduced into the Fluid. When using cleaning rags, use a lint-free rag.
- **Proper storage**. Keep the Hydraulic Fluid sealed in its container until ready for use; store the Fluid in a clean, dry, and cool area.
- **Cover the Hoses and Fittings**. Before installation, do not leave the ends of the Fittings exposed; the same applies for the Hydraulic Hoses. As a general rule, keep the Hydraulic Hoses and Fittings capped and kept clean in a clean area until ready for use.
- **Filter the new Hydraulic Fluid**. Just because it is new does not necessarily mean it is *clean*. Use an offline filtration cart or kidney loop system to make sure the Hydraulic Fluid is clean before being transferred into the Hydraulic Fluid Reservoir (even using a heavy duty nylon mesh screen is better than trusting what is left at the bottom of the barrel).
- **Avoid mixing different types of Hydraulic Fluid**. If Hydraulic Fluid needs to be replaced, make sure to flush the Hydraulic System of the old Hydraulic Fluid before adding the replacement Fluid; do not mix the two together.

About Thread Sealants

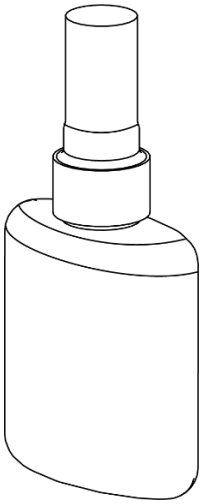

We recommend using a Liquid Thread Sealant (like Loctite™ 5452 or similar PTFE Thread Sealant) to seal the Hydraulic components on the Lift.

Liquid Thread Sealant lubricates and fills the gaps between the Fitting threads, and leaves no particles that could contaminate the Hydraulic Fluid. Other types of sealants (like Teflon Tape) can shred during installation or maintenance and eventually enter the Hydraulic System.

Liquid Thread Sealant can be used with most Hydraulic Fittings, generally for Hydraulic Fittings with NPT connectors.

Apply the thread sealant when the ambient temperature is between +46.5°F to +70°F (+8°C to 21°C).

To apply Thread Sealant:

1. Make sure the Fittings and connectors are clean and dry.

   If adding Thread Sealant to a Fitting or connector that has already been used with a different Sealant, use a wire brush to thoroughly remove the old Sealant before adding more.

2. Apply a small amount of Thread Sealant to the first four threads of the Fitting.

   ⚠ **WARNING** Make sure to wear the proper protective equipment when using Thread Sealant.

   Apply a small amount since the Sealant will spread to the other threads as the Fitting is tightened into place.

   If too much is added, the excess liquid will be pushed out when the Fitting is tightened; use a rag to wipe away any excess.

3. Tighten the Fitting into the connector; do ***not*** overtighten the Fitting.
4. Allow the manufacturer's recommended **24 hours** of curing time before pressurizing the system.

Installing the Hydraulic Hose

The Hydraulic System uses hydraulic pressure from the Power Unit to the Hydraulic Cylinders, which uses that force to raise and lower the Runways.

Note: Tighten all Elbow Fittings so that they are correctly positioned (clocked) to allow adjoining hydraulic or air line hose fittings to properly align.

To install the Hydraulic Hose, use the following components:

- **The Hydraulic Hose**. *5570022, 5570036*. The Hydraulic Hose has a Curved end and a Straight end.
- Cylinder. 5502038
- **JIC to NPT Hydraulic Elbow Fitting**. *5550106*. The JIC end goes to the Hydraulic Hose and the NPT end goes to the Hydraulic Cylinder.
- **JIC to ORB Hydraulic Elbow Fitting**. *5550008*. The JIC end connects to the Hydraulic Hose and the ORB end connects to the Power Unit. *Not connected at this point*.

The following drawing shows the connections to make to the Hydraulic Hose.

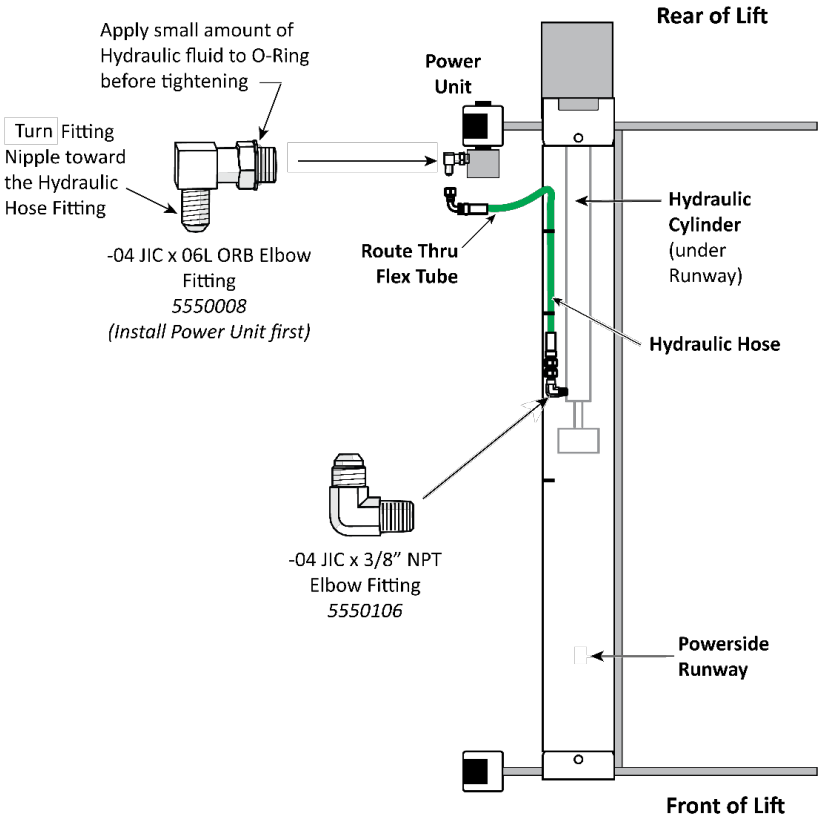

Drawing shows a top view of the Powerside Runway. Not drawn to scale. Not all components shown.

To install the Hydraulic Hose:

5. Locate the Hydraulic Hose and a Hydraulic Elbow Fitting (*5550106*).
6. Prepare the Hydraulic components using the information on p. 47; ***Cleaning Hydraulic Hoses***.

3 On the Hydraulic Cylinder, remove the Shipping Plug ***from the Port at the Piston Rod end.***

4. Attach the NPT end of the Elbow Fitting to the Port and tighten it, while allowing the correct position to align with the soon to be installed hydraulic hose JIC end.

   Use Thread Sealant on NPT Threads only.

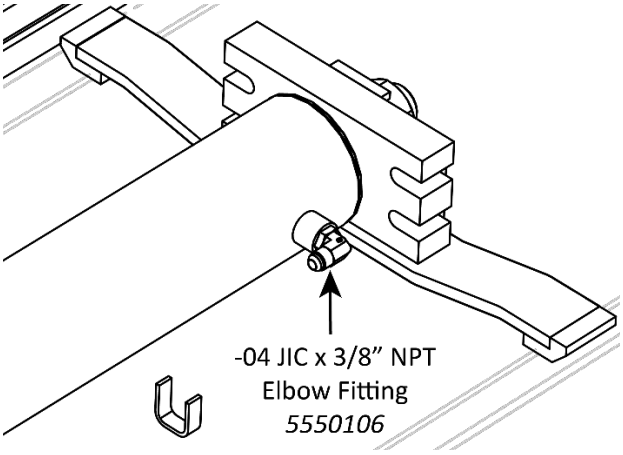

View is from underneath the Powerside Runway. Not all components are shown.

5. Attach the Straight end of the Hydraulic Hose to the JIC end and tighten it.
6. Take the Curved end of the Hydraulic Hose and, starting at the Hydraulic Cylinder, route the Curved end through the Retaining Rings along the inside edge of the Runway and then through the Flex Tube opening.

NOTICE Once completed, the Curved end should exit the Flex Tube opening near the Power Unit.

7. Leave the Curved end of the Hydraulic Hose leaving the Flex Tube opening for now.

Setting Up the Hydraulic Return Line

The Return Line routes excess Hydraulic Fluid from the Hydraulic Cylinder (attached opposite the Port at the Piston Rod end) and transfers it back into the Fluid Reservoir on the Power Unit.

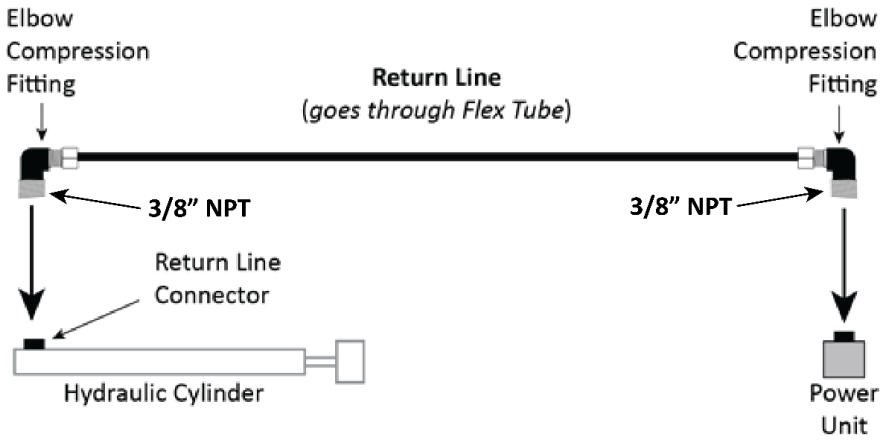

To assemble and install the Return Line, requires the following components:

- **The Return Line**. *5570795*. The Return Line assembly will encompass a single piece of ¼ in., black, polyethylene Tubing with Elbow Compression Fittings on each end.
- **(2X) COMP to NPT Elbow Fittings**. *5550089*. The COMP end connects the Return Line and the NPT end connects to the Power Unit and the Hydraulic Cylinder.

Important: The Return Line uses the same ¼ in., black, polyethylene Tubing as the Air Lines. Be sure not to confuse the two; the Return Line and the Air Lines perform different functions and ***must*** be kept separate from each other.

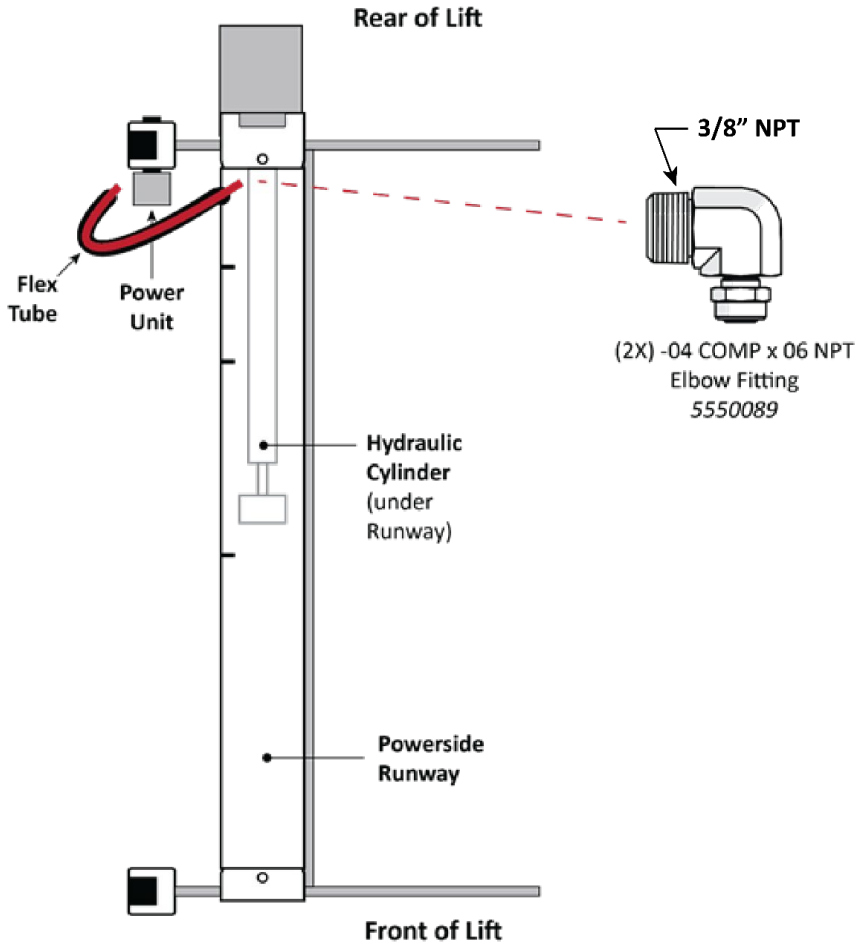

Drawing shows a top view of the Powerside Runway. Not drawn to scale. Not all components shown.

To make and install the Return Line:

1. Measure the distance from the Return Line Port on the Hydraulic Cylinder to the Return Line Port on the Power Unit.
2. Cut a piece of Tubing to the measured length from the roll of Tubing that comes with the Lift.

   Note: It is better to cut the Tubing a little too long rather than a little too short.
3. Route the Tubing from the Hydraulic Cylinder through the Flex Tube opening, and out next to where the Power Unit will be installed.
4. Remove the Shipping Plug from the Return Line Port on the Hydraulic Cylinder, then tighten and connect the Compression Elbow Fitting *(5550089)* into the Port where the Shipping Plug was.
5. ***Note:*** Install all Elbow Fittings so that they are correctly tightened and positioned (clocked) to allow adjoining hose fittings to properly align.

Use Thread Sealant on NPT threads only.

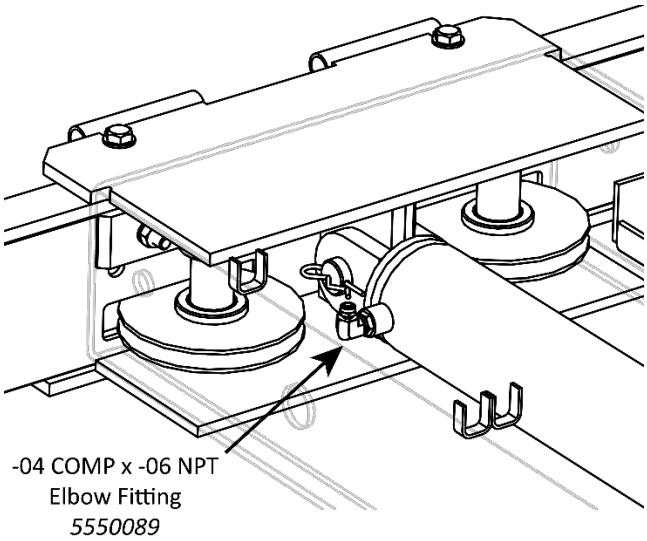

View is from underneath the Powerside Runway, near Cylinder bottom end. Not all components shown.

6. Connect and tighten one end of the Return Line to the COMP end of the Fitting.

   Refer to **Working with Compression Fittings and Tubing** for instructions.

7. Leave the Power Unit end of the Return Line hanging from the Flex Tube opening for now.
8. Repeat Steps for the other Platform.

Installing the Power Unit

This section describes how to ***install***, but not make the connections to, the Power Unit for your Lift. An Electrician is ***not*** needed to install the Power Unit; however, one ***is*** required to connect the Power Unit to its power source.

The Power Unit ***must*** be installed on the Power Post; attach it to one of the two Mounting Brackets, whichever is more convenient for the installation.

⚠ **DANGER** Risk of explosion: The Power Unit has internal arcing or parts that may spark and should not be exposed to flammable vapors. Never expose the Power Unit motor to rain or other damp environments. Damage to the motor caused by water is ***not*** covered by the warranty.

⚠ **CAUTION** The Power Unit is heavy. BendPak recommends one person holds the Power Unit, while another person bolts it into place.

The following drawing shows how to attach the Power Unit to the Power Post.

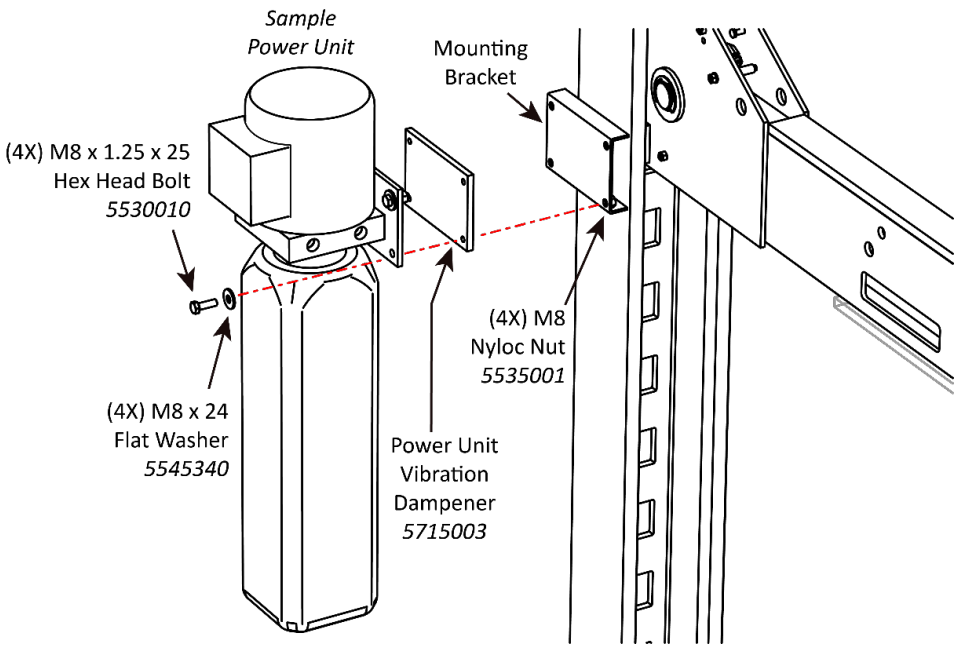

NOTICE Your Lift arrives with a Power Unit sourced from one of a few vendors that meet or exceed our strict requirements. Therefore, the Power Unit that came with your Lift may differ in appearance from the drawings in this manual.

To install the Power Unit:

1. Remove the Power Unit, Vibration Dampener, and supplied hardware from packaging.
2. Line up the holes on the Mounting Plate and Vibration Dampener with the four holes in the Mounting Bracket.

   Both the Vibration Dampener and the Mounting Bracket have four holes, one in each corner. Make sure to use all four holes to hold the Power Unit.
3. Secure the Power Unit and Vibration Dampener to the Mounting Plate using supplied hardware.

Filling the Hydraulic Fluid Reservoir

The Hydraulic Fluid Reservoir requires approximately **3.6 gallons** / **13.5 liters** of Hydraulic Fluid. The Power Unit will ***not*** work correctly until it is filled with the approved Hydraulic Fluid.

Approved fluids are any general purpose ISO-32, ISO-46, or ISO-68 Hydraulic Fluid or approved automatic transmission fluids such as Dexron III, Dexron VI, Mercon V, Mercon LV, or any synthetic Multi-Vehicle automatic transmission fluid.

⚠ **WARNING** Do not run the Power Unit without Hydraulic Fluid; damage may occur.

To fill the Hydraulic Fluid Reservoir:

1. Remove the Reservoir Cap and set it aside.

   Take care to ***keep contaminants out*** of the Hydraulic Fluid Reservoir.
2. Fill the Hydraulic Fluid Reservoir on the Power Unit with the appropriate amount of Hydraulic Fluid.
3. When the Reservoir is full (approximately 1-in. from top), replace the Reservoir Cap.

   Do not connect the Power Unit to a power source at this point.

Hydraulic System Warnings

Before applying power to the Hydraulic System note the following Warnings:

⚠ **WARNING** Failure to observe these warnings can result in serious personal injury including, in rare cases, death.

⚠ **WARNING** The Hydraulic hoses and connections must be inspected before any attempt to raise a Vehicle is made.

⚠ **WARNING** Verify all Hydraulic Hose connections and fittings, including unused auxiliary port plugs on the Power Unit, the Flow Divider, the Cylinders and anywhere else in the Hydraulic System are tightened.

⚠ **WARNING** The Power Unit is a Hydraulic Pump capable of developing pressures in excess of 5,000 psi (345 BAR). A pressure relief valve is used to set the pressure to the desired level. Tampering with, adjusting, modifying, or removing the relief valve is extremely dangerous and is not recommended. Only trained Hydraulics technicians should make adjustments to the relief valve, using calibrated hydraulic pressure gauges to assure the proper pressure setting is achieved.

⚠ **WARNING** Changes to the output pressure may render the power unit incompatible with pressure limitations of other components in the hydraulic circuit. This may cause catastrophic failure of those components, and could result in property damage, serious personal injury, or death.

⚠ **WARNING** The Hydraulic System can contain high pressure which, if suddenly released, can cause serious injury or death.

⚠ **WARNING** Do **not** attempt to connect or disconnect Hydraulic Hoses while the equipment is loaded or while a Vehicle is on the Lift, or the Hydraulic System is under pressure.

⚠ **WARNING** Keep bare hands away from Hydraulic Fluid; always wear gloves when handling Hydraulic Fluid, Cylinders or Hydraulic Hoses.

⚠ **WARNING** When handling Hydraulic Fluid, always observe the safety instructions from the manufacturer.

⚠ **WARNING** **Always** promptly clean any Hydraulic Fluid spills. If a leak is the source of the spill, lockout the Lift to prevent use until the Hydraulic System is repaired.

Completing the Flex Tube Installation

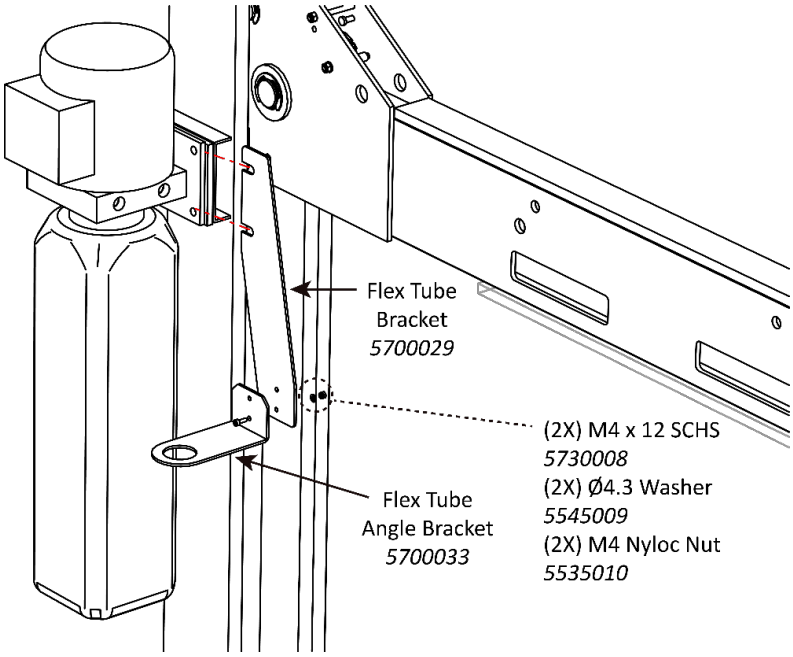

1. Locate the Flex Tube Bracket (5700029) and the Flex Tube ***Angle*** Bracket (5700033) from the Parts Box.
2. Install the Flex Tube Bracket. Location options are between the Mounting Bracket and the Back Plate or between the Back Plate and the retaining Nut.

NOTICE It is acceptable to install the Flex Tube Bracket between the Mounting Bracket and the Back Plate. This allows the Flex Tube ***Angle*** Bracket (which holds the Pushbutton Air Valve and is described in the next section) to be installed between the Back Plate and the retaining Nut. This configuration is common, but not required. BendPak recommends orienting the Flex Tube so that the exiting lines will be adjacent to the Power Unit and the Pushbutton Air Valve's connections.

3. Connect the ***Flex Tube Angle Bracket*** to the ***Flex Tube Bracket*** using two Bolts, Washers, and Nuts.

   The Flex Tube ***Angle*** Bracket can be connected on either side of the Flex Tube Bracket.
4. When the Flex Tube ***Angle*** Bracket is in place, unscrew the Plastic Collar of the Flex Tube.
5. Holding the Flex Tube by the Plastic Collar, put the Threads through the hole on the Flex Tube ***Angle*** Bracket ***from underneath,*** and let the other end hang loosely.
6. Screw the Plastic Nut back onto the Threads and tighten.

   Measure Flex Tube and Cut-to-Length.
7. Move the Lift Platforms to the Top Lock as described in this Manual.
8. Carefully measure, correctly mark, then accurately cut the Flex Tube at the measured length for your Lift. The cut-to-length dimension is 52 (±1) in. / 1,320 (± 25) mm.
9. Loosely install the second Connector on the Flex Tube Angle Bracket.

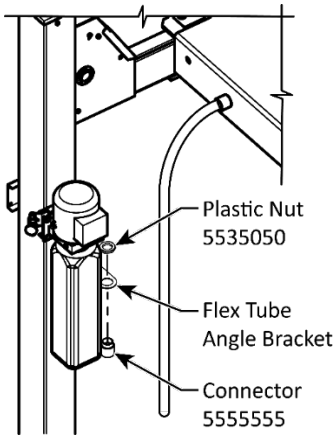

10. Move the free end of the Flex Tube up to the connector on the Flex Tube ***Angle*** Bracket. The Tube should create a gentle radius that does not pinch or collapse the Flex Tube.
11. Install the Flex Tube's cut end into the Connector on the Flex Tube ***Angle*** Bracket. Refer to the figure below:

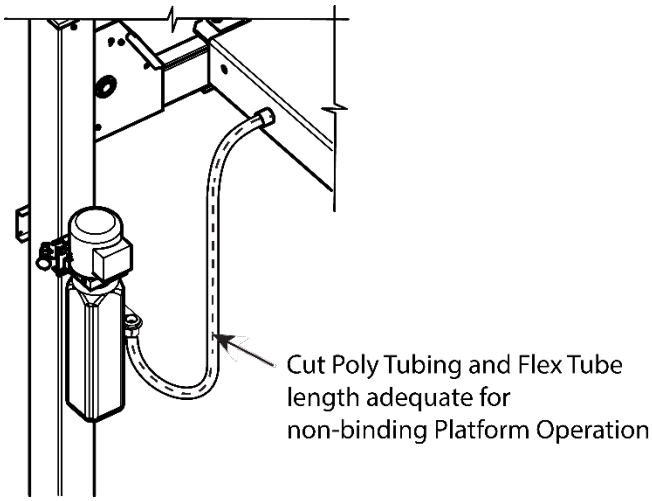

Installing the Pushbutton Air Valve

The Pushbutton Air Valve is used to release the Safety Locks allowing the Runways to lower. It may be installed on either side of the Power Unit, but we recommend placing it on the side facing *away* from the Lift.

On site supplied air pressure; a minimum of 50 to 150 psi / 3 to 25 cfm is required.

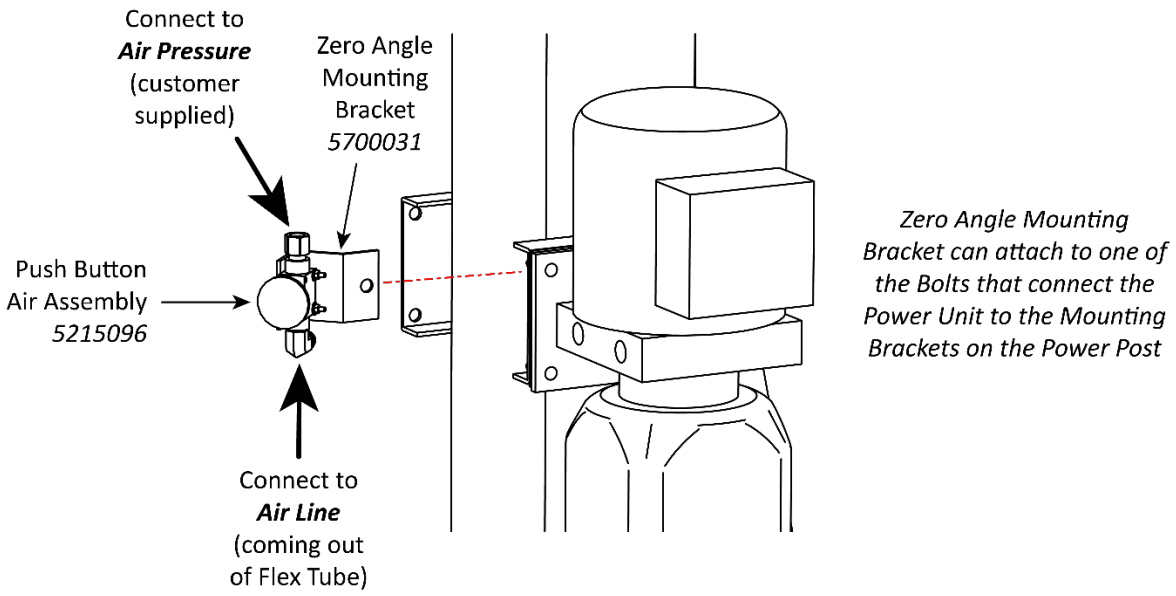

The Figure above details the Pushbutton Air Valve Assembly and its connections to the Mounting Bracket on the Power Post. Not all components shown. Sample Power Unit shown.

To install the Pushbutton Air Valve:

1. Find the necessary components: Flex Tube Angle Bracket and the Pushbutton Air Valve Assembly.
2. Connect the Flex Tube Angle Bracket at the desired location (if it has not already been connected).

   The best location is one that is visible and easily reached by the Lift operator.
3. Connect the Pushbutton Air Valve to the Flex Tube Angle Bracket.

   Use the two holes on the Pushbutton Air Valve on the side away from the actual pushbutton. Do not use the holes next to the pushbutton, the Flex Tube Angle Bracket interferes with the pushbutton's operation.
4. Connect the Air Line Compression Elbow Fitting and the Straight Expander Fitting to the appropriate locations on the Pushbutton Air Valve.

   The Elbow Fitting connects to the opening labelled **CYL**. The Straight Fitting to the opening labelled **IN**. See the drawing above.

   Note: Tighten all Elbow Fittings so that they are correctly positioned (clocked) to allow adjoining hydraulic or air line hose fittings to properly align.
5. Attach the Air Line to the Compression Fitting and the customer-supplied air to the Straight Fitting.

NOTICE: The Return Line also comes out of the Flex Tube and is the same type of tubing as the Air Line. ***Do not attach the Return Line to the Pushbutton Air Valve by mistake***. Double check to make sure the Air Line is attached to the Pushbutton Air Valve.

Connecting the Return Line

One end of the Return Line is already connected to the Hydraulic Cylinder; the other end of the Return Line connects to the Power Unit.

To attach the Return Line to the Power Unit:

1. Remove the Shipping Plug from the Hydraulic Return Port on the Power Unit, then attach an Elbow Compression Fitting (*5550089*) to the Port.

   Use Thread Sealant on NPT Threads only.

   See **Connecting the Power Source** for the possible connector locations.

2. Attach the Return Line (coming out of the Flex Tube) to the other end of the Fitting.

   For information about connection compression fittings, refer to **Working with Compression Fittings and Tubing**.

NOTICE Attach the ***Return Line*** to the ***Power Unit***-NOT the ***Air Line***. ***Do not attach the Air Line to the Power Unit by mistake***.

Connecting the Hydraulic Hose

One end of the Hydraulic Hose is already connected to the Hydraulic Cylinder; the other end of the Hydraulic Hose needs to be connected to the Power Unit.

To connect the Hydraulic Hose to the Power Unit:

1. Locate the Hydraulic Power Port on the Power Unit, remove the Shipping Plug, then attach the Hydraulic Fitting (*5550008*) to the Port (add a drop of hydraulic fluid first to lube O-ring and threads).

   See **Connecting the Power Source** for the possible connector locations.

2. Connect and securely tighten the ORB end of the Fitting to the Hydraulic Power Out on the Power Unit.
3. Connect and securely tighten the JIC end of the Fitting to the Hydraulic Hose.

Contacting the Electrician

As noted, there are installation tasks that ***require*** a licensed Electrician.

⚠ **DANGER** All wiring ***must*** be performed by a licensed Electrician. If someone who is not a licensed Electrician attempts these tasks, they could damage the Lift or be electrocuted, resulting in serious injury or even death.

The Electrician needs to:

- **Connect an electrical power source to the Power Unit**. Refer to **Connecting the Power Source** for more information.
- **Install a Power Disconnect Switch**. Ensures quick and complete interruption of electrical power to the Lift in the event of an electrical circuit fault, emergency situation, or when equipment is undergoing service or maintenance. Place within sight and easy reach of the Lift operator. Refer to **Install a Power Disconnect Switch** for more information.
- **Install a Thermal Disconnect Switch**. Ensures the equipment shuts down in the event of an overload or an overheated motor. Refer to **Install a Thermal Disconnect Switch** for more

information. ***The motor on the Power Unit that comes with the Lift is not thermally protected***.

The Electrician is responsible for providing:

- an appropriate plug to attach to the Power Unit
- an appropriate Power Cord that goes from the power source to the plug on the Power Unit
- a Power Disconnect Switch
- a Thermal Disconnect Switch

Connecting the Power Source

The standard Power Unit for your Lift is 220 VAC, 60 Hz, 1 Ph. The Power Unit must be connected to an appropriate power source.

Refer to **Wiring Diagrams** for wiring information.

⚠ **DANGER** All wiring ***must*** be performed by a licensed Electrician. Do not perform any maintenance or installation on the Lift without first making sure that the main electrical power has been disconnected from the Lift and ***cannot*** be re-energized until all procedures are complete. If your organization has Lockout/Tagout policies, make sure to implement them after connecting to a power source.

Important electrical information:

- Improper electrical installation can damage the motor; this is not covered under warranty.
- Use a separate circuit breaker for each Power Unit.
- Protect each circuit with an appropriate time-delay fuse or circuit breaker for the power unit supplied.

The following figure shows the configuration for the Power Unit. **P1**/**P2** represents the Hydraulic Power Out; **T1**/**T2** or **CV1**/**CV2** commonly represents the Hydraulic Return.

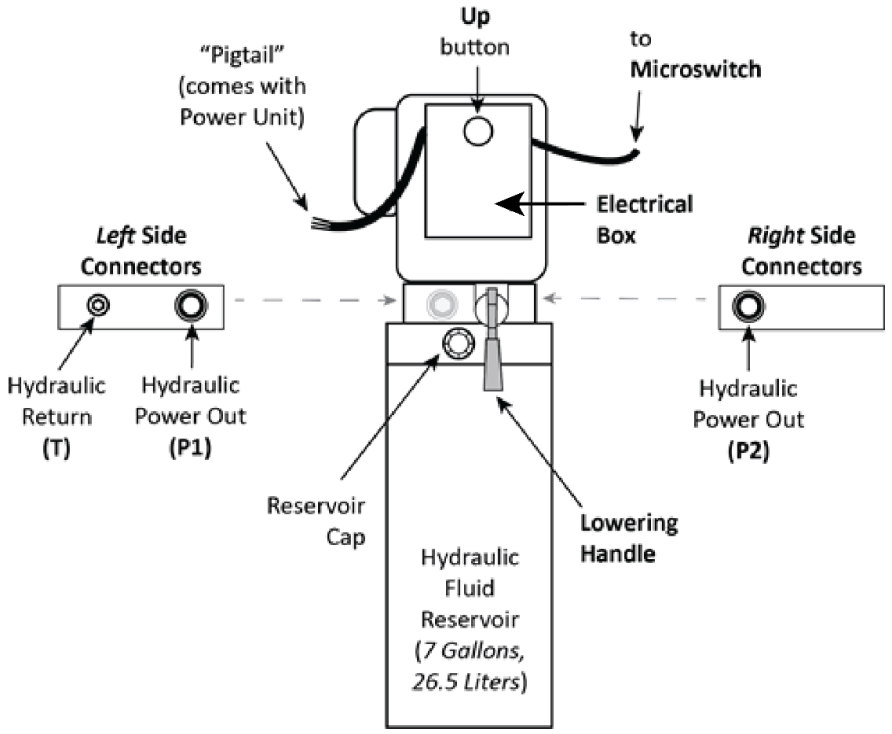

Depending on your Power Unit, the connector locations may differ. Use the drawing below to identify your layout and then attach your Hydraulic Hoses and Return Line appropriately.

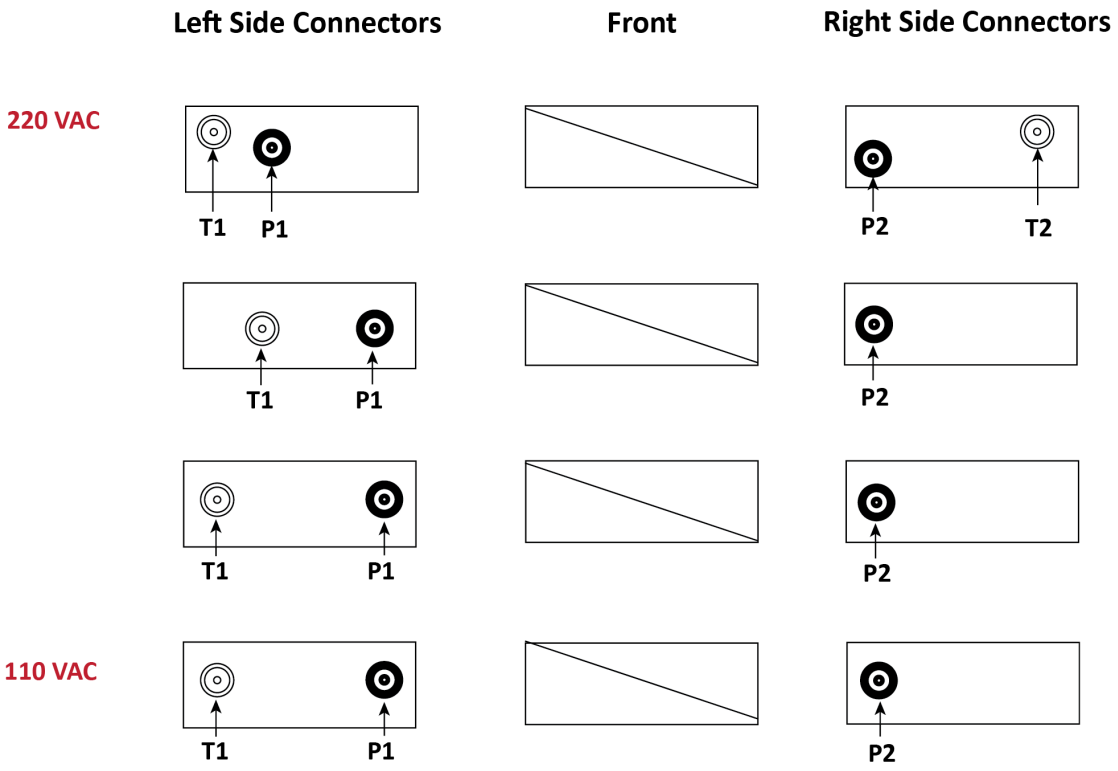

To connect the Lift to a power source:

1. Have a licensed Electrician locate the Pigtail coming out of the Electrical Box on the Power Unit.
2. Open the Electrical Box, *remove* the Pigtail, and then either:
   - Wire the Power Unit directly into the facility's electrical system and protected by an appropriate circuit breaker.
   - Wire a Power Cord (with appropriate plug) inside the Electrical Box to the wiring that was connected to the Pigtail.
   - All wiring in accordance with the national, state, and local electrical codes.

   Do not use the Pigtail.

NOTICE The Power Cord and Plug are ***not*** supplied with the Lift.

See **Wiring Diagrams** for wiring information.

3. Close the Electrical Box.
4. When ready, connect the Plug into the power source.

⚠ **WARNING** Do not run the Lift without an adequate supply of Hydraulic Fluid; otherwise, damage may occur to the Power Unit. All wiring in accordance with national, state, and local electrical codes.

Installing a Power Disconnect Switch

⚠ **WARNING** A main Power Disconnect Switch is ***not*** provided with this equipment.

A Power Disconnect Switch is a National Electrical Code (NEC) requirement. They are designed to interrupt electrical power in the event of an electrical circuit fault, emergency situation, or when equipment is undergoing service or maintenance.

Install a UL Listed Power Disconnect Switch that is properly rated for the incoming power.

⚠ **DANGER** All wiring ***must*** be performed by a licensed, Electrician in accordance with all local and national electrical codes.

Your Power Disconnect Switch must be readily accessible and installed so that it is within easy reach of the Lift operator. It must be clearly and legibly marked to indicate its purpose.

The drawing to the right shows a toggle Power Disconnect Switch between the Lift's power source and its Power Unit. A quick flip of the switch immediately cuts power to the Lift.

Make sure to have a licensed Electrician install the Power Disconnect Switch.

Make sure the electrician selects a ***UL-listed*** Power Disconnect Switch.

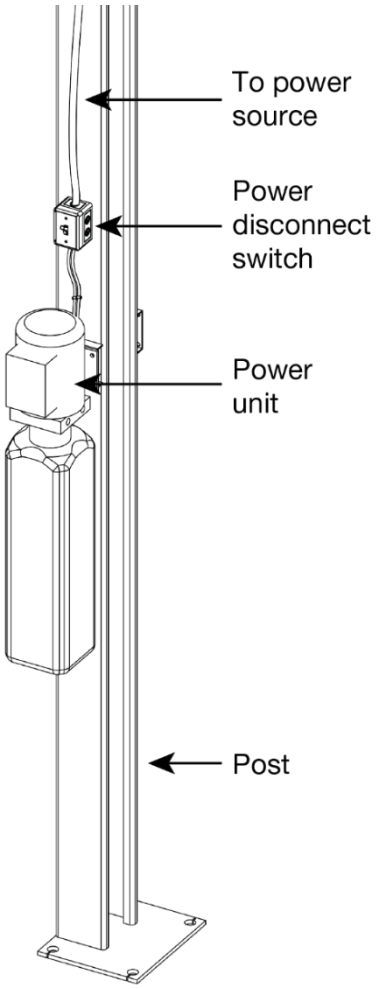

Installing a Thermal Disconnect Switch

⚠ **WARNING** The Lift's motor does ***not*** have thermal overload protection.

Connect a motor Thermal Disconnect Switch or overload device that will make sure the equipment shuts down in the event of an overload or an overheated motor.

⚠ **DANGER** All wiring ***must*** be performed by a licensed Electrician in accordance with all local and national electrical codes.

High electrical current that exceeds the motor's full load amps (FLA) rating may result in permanent damage to the motor.

BendPak strongly recommends ***not*** exceeding the rated duty cycle of the Lift's motor.

Anchoring the Posts

The Lift's four Posts ***must*** be anchored and placed squarely. After confirming measurements, install one Anchor Bolt in each corner of each Base Plate, 4 per Post, 16 Anchor Bolts total.

Important- This means to measure the lift's four post spans as well as measuring diagonally. Diagonally means post measurements in an "X" fashion. Front Post Chalk Lines and final positions MUST agree within an 1/8 in. or 3.2 mm during final anchoring of lift. Double-Check that nothing has moved before and after tightening.

Concrete specifications are:

- **Depth**: 4.25 in. thick
- **PSI**: 3,000 PSI, minimum
- **Cured**: 28 days, minimum

Anchor Bolt specifications are:

- **Length**: 4.75 in.
- **Diameter**: 0.75 in.
- **Anchor torque**: 85 – 95 pound feet

⚠ **WARNING** You ***must*** wear OSHA-approved (publication 3151) personal protective equipment at all times when installing, using, maintaining, or repairing the Lift. Leather gloves, steel-toed work boots, eye protection, back belts, and hearing protection are ***mandatory***.

⚠ **WARNING** Your Concrete and Anchor Bolts ***must*** meet these specifications. Only install your Lift on a Concrete surface. Installing a Lift on asphalt or any other non-concrete surface, or with Concrete or Anchor Bolts that do not meet required specifications, may lead to product damage, Vehicle damage, personal injury, or even death.

⚠ **CAUTION** BendPak Lifts are supplied with installation instructions and concrete anchors that meet the criteria set by the current version of the American National Standard "Automotive Lifts – Safety Requirements for Construction, Testing, and Validation", ANSI/ALI ALCTV. You are responsible for any special regional structural and/or seismic anchoring requirements specified by any other agencies and/or codes such as the Uniform Building Code (UBC) and/or International Building Code (IBC). Be sure to check your floor for the possibility of it being a ***post-tension slab***. In this case, contact the building architect before drilling. Using ground penetrating radar may help you find the tensioned steel.

⚠ **WARNING** Cutting through a tensioned cable can result in injury or death. Do not drill into a post-tension slab unless the building architect confirms you are not going to hit tensioned steel, or you have located it using ground penetrating radar. If colored sheath comes up during drilling, stop drilling immediately.

⚠ **WARNING** Use only the Anchor Bolts delivered with the Lift. If components from a different source are used, you void your warranty and compromise the safety of everyone who installs or operates the Lift.

Lift buyers are responsible for conforming to all regional, structural, and seismic anchoring requirements specified by any other agencies and/or codes, such as the Uniform Building Code and/or International Building Code.

To anchor the Posts:

1. Locate the following hardware: four Anchor Bolts, four Nuts, and four washers ***per Post***.
2. Using the Base Plates as guides, drill the correct diameter holes—one hole in each corner of the Base Plate, equaling four holes total per Base Plate.

Important: ***Do not drill all the way through the concrete***; otherwise, the holding strength of the Anchor Bolt is compromised. Wrap masking tape around the drill bit to mark the correct depth.

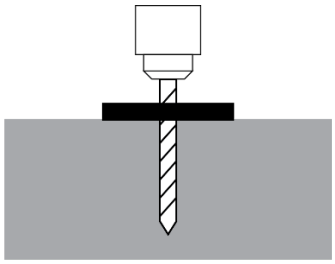

Go in straight, in the center of the hole; do not allow the drill to wobble.

Use a masonry bit (conforming to ANSI B212.15).

The diameter of the drill bit must be the same as the diameter of the Anchor Bolt. As an example; a ¾ in. diameter Anchor Bolt, use a ¾ in. diameter drill bit.

3. Vacuum or blow out with compressed air, each hole clean. Wearing eye protection required.

Important: The holding strength of an Anchor Bolt is partially based on how cleanly the Expansion Sleeve presses against the Concrete. If the hole is dirty, the Expansion Sleeve does not grip as strongly, which means less holding strength. If the hole is too wide, the Expansion Sleeve does not press against the Concrete with as much force, again resulting in less holding strength.

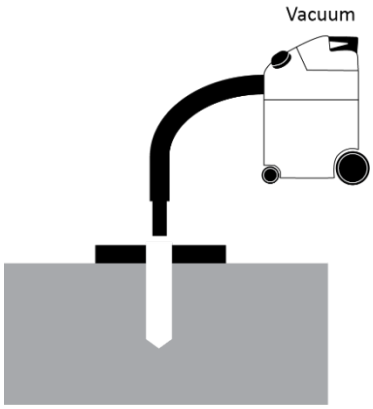

BendPak recommends using a vacuum to clean the hole. Or compressed air; to ***make sure to thoroughly clean each hole***.

Do ***not*** ream the hole. Do ***not*** make the hole any wider than the drill bit did.

4. Make sure the Washer and Nut are in place, then insert the Anchor Bolt into the hole.
5. Hammer or mallet the Anchor Bolt the rest of the way down into the hole.

   Stop when the Washer is snug against the Base Plate.

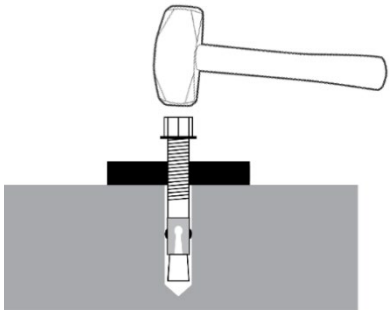

The Expansion Sleeve of the Anchor Bolt may prevent the Anchor Bolt from passing through the hole in the Base Plate; this is normal. Use a hammer or mallet to get the Expansion Sleeve through the Base Plate and into the hole.

Even using a hammer or mallet, the Anchor Bolt should only go into the hole part of the way; this is normal. If the Anchor Bolt goes all the way in with little or no resistance, the hole is too wide.

6. Once past the hole in the Base Plate, the Anchor Bolt eventually stops going down into the hole as the Expansion Sleeve contacts the sides of the hole; this is normal.
7. Plumb each Post; install any needed Shims.

   Do not shim a Post more than ½ in. with the provided Shims. A maximum of 2 in. is possible by ordering optional Shim Plates. Contact BendPak at **(800) 253-2363**, extension 191 to order. Please have the model and serial number of your Lift available.

   Be patient and focus while plumbing and shimming the Posts; ***it is important to make the Lift as level as possible***.
8. Tighten each Nut slowly in steps to the recommended installation, 85 – 95 lb.-ft, with a Torque Wrench.

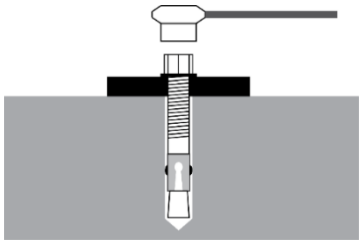

Important: Do ***not*** use an impact wrench to torque the Anchor Bolts.

Tightening the Nut forces the Wedge up, while forcing out the Expansion Sleeve and pressing it tightly against the Concrete.

Final Leveling

The following procedure describes how to level the Lift and when to perform final ladder adjustment tightening to each Post. Proper leveling allows for the four Safety Locks on each Platform to engage at very close to the same time.

To perform final leveling:

1. Raise both Platforms to the first Lock position (the primary Safety Locks, not the Slack Safety Locks).
2. Use a Transit Level or other leveling mechanism to evaluate how level the Posts and Runways are to each other.
3. If a Runway needs to be adjusted, use the Top Nut and Stop Nut on the Top Cap of each Post to make adjustments to the Ladder in that Post. This alters both the levelness of the Runway, and when all Safety Locks engage.
4. Raise each Platform to about mid-height (approximately 60 inches), listening as the Safety Locks engage.

   If the Safety Locks are engaging at the same time, no further adjustments are necessary.

   If the Safety Locks are *not* engaging at the same time, check the leveling again, make necessary adjustments, and then raise the Lift again and listen as the Safety Locks engage.
5. Leave the first adjusted Platform engaged on a Safety Lock.
6. Repeat Steps 1 through 5 for the adjacent (second) Platform.

   Important: After all leveling is completed, firmly secure the Backing Nuts at the top of each Post.

Installing Accessories

The accessories available for the Lift includes:

- **Runway Covers** Installed underneath the Runways. Covers the Cables and Hydraulic Cylinder.
- **Tire Stops** Positioned at the Front of the Lift. Stops the front Tires of the Vehicle where placed.
- **Drive-up Ramps** Easy to install, 2 additional platform approaches and made from rugged, lightweight aluminum. Install at the Rear of the Lift to allow vehicles to be easily driven on and off the Runways.
- **Gusset Covers** Shields and protects.
- **Aluminum Decks** Installs between runways and shields vehicles parked underneath.
- **Anti-Slip Tape** Easy to install tape that adheres to runway surfaces to improve grip.

Runway Covers

Each Runway has three Covers that install on the underside. These cover the Lifting Cables and Hydraulic Cylinder on the Powerside Runways; there is nothing underneath the Offside Runways.

To install the Runway Covers:

1. Locate the Runway Covers, then push the Covers up into place so that they sit on the inside Rails of the Powerside Runway.

   Sideview. Runway Covers are pushed up into place under the Runway.

2. Adjust the Covers until the Lifting Cables and the Hydraulic Cylinder are covered.
3. Repeat Steps 1 and 2 for the remaining Runways.

Tire Stops

Each Platform has two Tire Stops to be installed at Front of Lift, to halt a vehicle's forward movement.

To install the Tire Stops:

1. Locate the two Tire Stops, Pins, and Rotor Clips needed.
2. Place a Tire Stop in position through the Runway tubes (located at the front of each Runway) then slide the Pin through the Tire Stop and Runway tubes, and secure the Tire Stop in place.

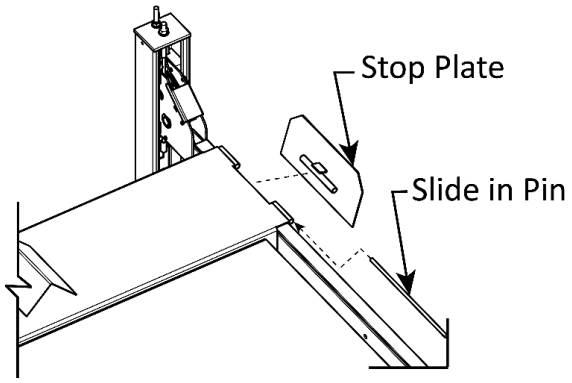

   The following graphics show how to install the Tire Stops for both Platforms.

   Overhead view. Some components not shown.

3. Repeat Steps 1 and 2 for the remaining three Tire Stops.

   Make sure to chock the Vehicle's Rear Tires when positioning in place on the Runways.

Drive-up Aluminum Ramps

Aluminum Drive-up Ramps install at the Rear of the Runways, allowing for easy drive-up onto the Platforms.

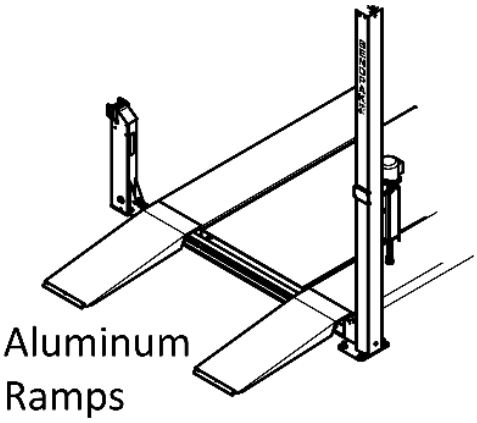

Note: Ramps are long and awkward; consider having two people help to install them. One to hold each Ramp, the other to put the components into place.

To install the Drive-up Ramps:

1. Find the required components, two Ramps, two Pins, and four Rotor Clips.
2. Put a Drive-up Ramp in position between the Runway tubes.
3. Insert the Pin through the Drive-up Ramp and Runway tubes.
4. Secure the Drive-up Ramp in place with a Rotor Clip on each end of the Pin; repeat for the opposite Drive-up Ramp.

Gusset Covers

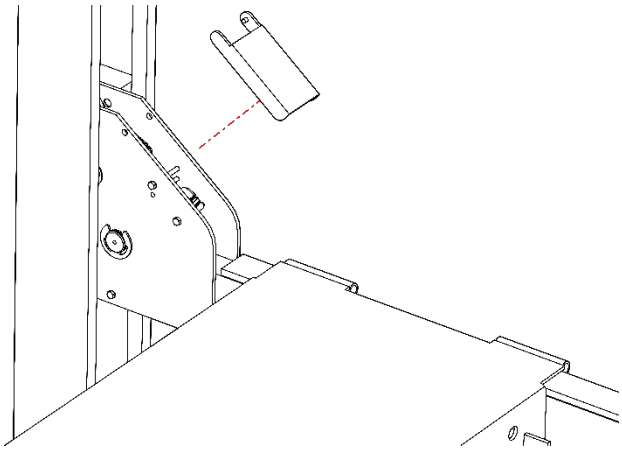

Each Gusset includes a cover to protect the Safety Release Mechanism and Sheave.

1. To install, simply snap each Gusset Cover into place as shown above.

Aluminum Solid Deck Kit

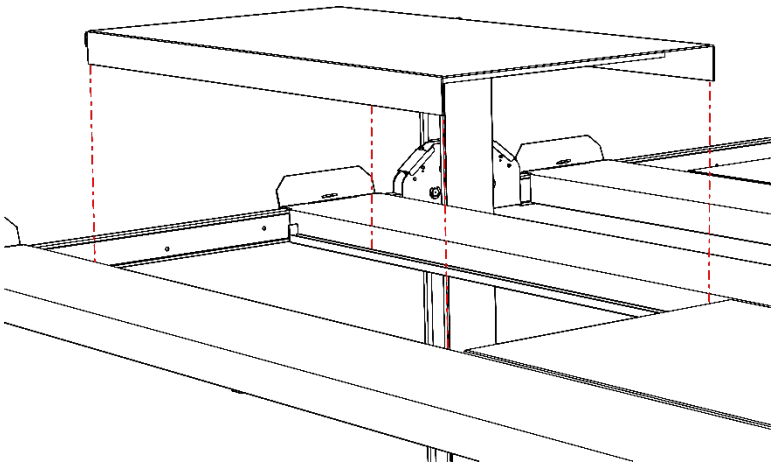

Included Aluminum Solid Deck kit protects vehicles parked underneath from oil or debris that may fall from the car parked above. The width of the Aluminum Decks are sized to fit the PL-12000 installed at the Wide setting.

Simply install to securely rest on each Runway's inner Utility Rail (as shown above).

⚠ **CAUTION** Aluminum Deck is *not suitable for jacking*

Applying Anti-Slip Tape

Anti-Slip Tape (5930195) is provided to service both runways on PL-12000DP/DPS four-post lifts that were produced *without* the non-skid, sandy grit runways. The supplied Anti-Slip Tape is used to increase the friction (grip) between the runway's metal parking surface, and Vehicles and/or Personnel upon the runways. The Anti-Slip Tape is constructed of a #20 Grit abrasive surface with a solvent acrylic adhesive backing.

The Anti-Slip Tape is supplied as two rolls; each measuring 6 in. x 24 ft. (152 mm x 7.3 m). The two rolls (together totaling 48 ft. / 14.6 m) allow applying Anti-Slip tape sections equally to both of the PL-12000DP/DPS Lift's platforms (one roll for 2 runways). BendPak suggests cutting each 24 foot tape roll, into 4 matching 72 in. (1,829 mm) lengths. The 2 rolls provide eight, 72 in. sections, which allow the installer to uniformly apply tape to all 4 runways/both platforms.

IMPORTANT! A clean surface is key to a good installation. If the runway is in poor condition with holes, or inferior surfaces, the Anti-Slip Tape will not adhere well. Lift Runways must also be clean, dry, and smooth free from dirt, oil, fuel, grease, water, or foreign materials. Apply above 0°C / 32°F.

To apply the Anti-Slip Tape:

1. Thoroughly wash, rinse, and dry the runway with a solution of soap and water to remove oils, dirt, fuel, or other contamination. Dry the runway with a clean cloth and allow to dry thoroughly.
2. Cut the Anti-Slip Tape into four equal lengths. Suggested lengths are 72 in. each (1,829 mm).
3. Again, verify the Runway is dry and clean, and temps are above freezing.

4. Measure and mark the runways with pencil guidelines or masking tape to outline the tape installation area on the ramps. Refer to the figure below for a suggested layout.

IMPORTANT! Do not install this Tape directly on the edge of a Runway. Apply at least 1 in. (25 mm) away from edges. Wash your hands. The Anti-Slip Tape's adhesive side is protected by a paper or plastic film. It is best to remove this film a few inches at a time to apply. Handle the tape by its edges. Minimize contact between adhesive and your hands.

IMPORTANT! BendPak recommends two people work together to install. One person removes the backing and applies the Tape to the Runway, second holds the Tape in place over the guidelines marked on the Runway.

5. Lay one piece of the Anti-Slip Tape on the runway and peel back about 2 in. (50 mm) of the protective film. Apply the adhesive side to the Runway inside the guidelines created in step 4.
6. Slowly remove the film and press the exposed Tape's adhesive side to the Runway. Work slowly and apply 2 to 5 in. at a time.

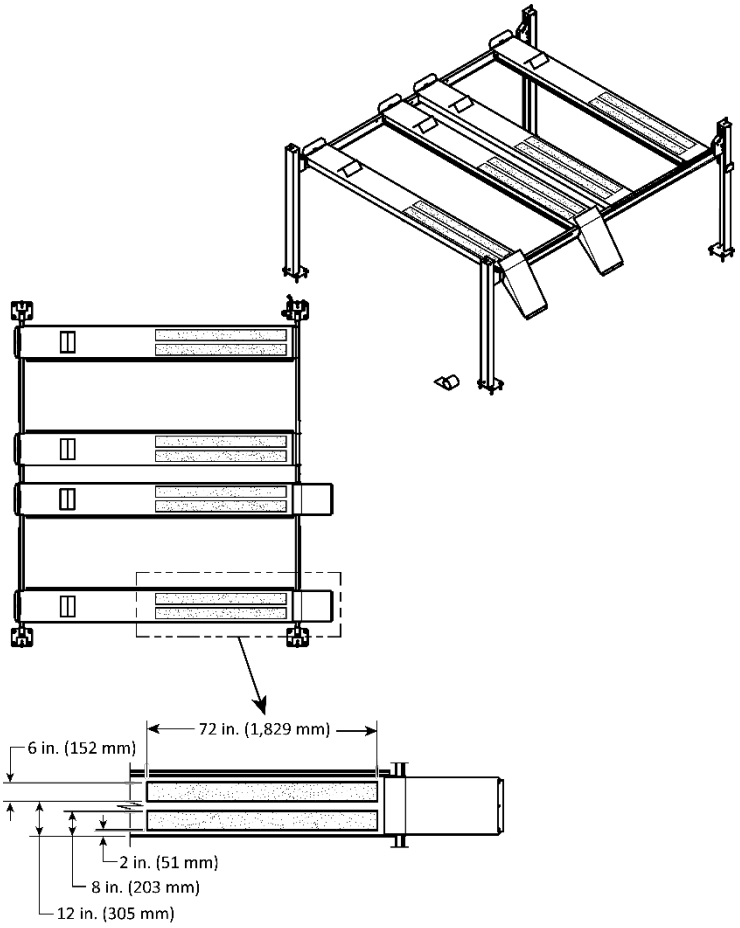

7. After applying the Tape, use a heavy rubber roller to press the Tape onto the Runway and to ensure firm contact with the adhesive.
8. Apply the Anti-Slip Tape to the remaining area of the Lift's runways similar to the figure below.

Operational Test

BendPak recommends performing an Operational Test of your Lift with a typical Vehicle ***before*** starting normal usage (a Vehicle is not required, but is recommended).

⚠ **WARNING** To reduce the risk of property damage, personal injury, or loss of life, ***NEVER*** park any vehicle on the Lift's runways without first placing two suitable wheel chocks behind each rear tire so that the vehicle cannot roll backward from Lift. Vehicles parked on Lift ***MUST*** also be placed in Park or First Gear (Manual Transmission) with the Parking Brake fully applied.

Performing an Operational Test will demonstrate how to operate the Lift and helps remove residual air from the Hydraulic System.

During the Operational Test, watch the operating components and check for proper installation and operation. For issues that continue, refer to **Troubleshooting**.

Note: Residual air in the Hydraulic System can cause the Lift to shake, move erratically, or squeak; this is sometimes normal during initial use. The cause may be the remaining air in the system. If so, the condition should diminish as the Lift uses a self-bleeding system.

To perform an Operational Test:

⚠ **WARNING** Only leave the Lift either fully lowered or engaged on Safety Locks. ***If you leave the Lift raised but not engaged on Safety Locks, the Lift Platform is not secure***. It could descend, possibly damaging a Vehicle, the Lift, and injuring anyone under the Platform.

1. Check the area around and above the Lift for obstructions; move anything that may be relocated.
2. If running the test with a typical Vehicle, drive it onto the desired Platform.
3. Press and hold **Up**. The selected Platform starts rising.
4. When the Platform is about a foot from the ground, release **Up**. The Platform stops rising.
5. Press and hold **Down**. The Platform starts lowering.
6. When the Platform gets to the ground, it will stop lowering automatically. Release **Down**.
7. Wait for one minute.

⚠ **CAUTION** The Power Unit's motor is **not** constant duty; it cannot be run continuously.

8. Repeat the process, this time raising the Platform to the first Safety Lock.
9. If the Platform is working without shaking, moving erratically, or squeaking, there is no need to repeat the procedure.

   If the Platform is shaking, moving erratically, or squeaking, this is common during the start-up period. Repeat the procedure one or two more times, with a one-minute break between.
10. Perform the same test with the next Platform.
11. Check the Hydraulic Fluid reservoir on the Power Unit.

NOTICE Bleeding the Hydraulic System may significantly lower the amount of Hydraulic Fluid in the reservoir. Add additional Hydraulic Fluid, if necessary.

If there are issues that continue, refer to **Troubleshooting** for more information.

Final Checklist Before Operation

Make sure the following has been done before using the Lift:

- Review the **Installation Checklist** to make sure all steps have been performed.
- Make sure the Power Unit is getting power from the power source.
- Check the Hydraulic Fluid reservoir; it must be full of approved Hydraulic Fluid or automatic transmission fluid. **The *motor may be harmed by operating without adequate fluid.***
- Check the Hydraulic System for leaks. Verify all Hydraulic Hose connections, Hydraulic Fittings, and Auxiliary Port Plugs on the Lift and Power Unit are tight.
- Check the Platform Sections to verify they are tightly bolted and in place.
- Make sure all Posts are properly anchored, shimmed, level, and stable.
- Make sure all Cables are taut, correctly routed, and properly positioned in their Sheaves, and lubricated.
- Verify that all Safety Locks are working normally.
- Make sure a copy of the *Installation and Operation Manual* is left with the Lift.
- If it has not been done already, perform an operational test of the Lift. Refer to **Performing an Operational Test**.

Operation

This section describes how to operate your Lift.

BendPak recommends reading *Lifting It Right* from the Automotive Lift Institute prior to putting your Lift into normal operation. It is a guide to the considerations required for the safe operation of automotive Lifts. It was included with your Lift.

⚠ **DANGER** Note that using an "automotive lift," to lift a Vehicle is a serious endeavor with life-threatening risks. Pay attention. Automotive Lifts are dangerous tools when used by inexperienced or impaired operators. ***Do not assume-Check before use***.

Safety Considerations

Do the following before raising or lowering a Vehicle:

⚠ **WARNING** Only leave the Lift either fully lowered or engaged on Safety Locks. ***If you leave the Lift raised but not engaged on Safety Locks, the Lift Platform is not secure***. It could descend, possibly damaging a Vehicle, the Lift, and injuring anyone under the Platform.

- **Check the Lift**. Walk all the way around the Lift, checking for any missing, heavily worn, or damaged parts. Always verify that all Hydraulic connections including Fittings, Hoses, and Auxiliary Ports are secure. Do not operate the Lift if issues emerge; instead, take it out of service, then contact the dealer, email **support@bendpak.com**, or call **(800) 253-2363**.
- **Check the area**. Keep the area around the Lift clean and free of obstructions; anything that may cause a problem for the Lift. Do not forget to check ***above*** the Lift. If an obstruction is found, move it out of the way. Resolve any issues before using the Lift. Do not allow anyone or anything within 30 feet of the Lift while it is operating.
- **Check the operators**. Make sure that everyone who is going to operate the Lift has been trained in its use, has read the Labels on the unit, and has read the Manual. Only the operator at the Console should be within 30 feet of the Lift when it is in motion.

  Do not allow children to operate the Lift. Do not allow anyone under the influence of drugs or alcohol to operate the Lift. Do not allow any unauthorized personnel to operate the Lift.

  When the Lift is moving, the Operator must be paying full attention to the Lift and the area around it. The Operator must not be multi-tasking, talking to another, or be distracted in any other way.
- **Practice safety**. Make sure everyone who is going to be walking near the Lift is aware of its general operating capabilities and takes appropriate safety measures. Only put Vehicles on the Platforms. ***When raising a Vehicle, do not leave the lift until platforms are on the Safety Locks***. When lowering the Lift, do not leave until it is safely on the ground.
- **Check the vehicle**. Never exceed the Lift's weight rating. Do not allow people inside a Vehicle that is going to be raised. Remove from the Vehicle anything that might be needed later while it is up on the Lift. Make sure the Vehicle is properly parked, is not off-balance on either end, and safety chocks are behind rear tires.

Raising and Lowering Vehicles

Keep the following in mind when operating your Lift:

- **Be safe**. Make sure to check for people, pets, other vehicles, toolboxes, and objects that might be in the path of the Lift as it is raised or lowered. Watch the Lift carefully as it raises and lowers.

⚠ **DANGER** Pay careful attention when raising or lowering the Platforms. If a person or pet becomes stuck under the Platform, they could be injured or, in rare cases, killed.

- **Platforms operate independently**. Each Platform on the Lift operates independently.
- **Vehicles must be on the Platform**. Vehicles need to be centered on the Platform; width wise. All four wheels must also be fully on the Platform, not the approach ramp or side structures.
- **Power Disconnect button**. If something unexpected happens, use the **Power Disconnect button** to immediately stop the Lift from moving.
- **Get needed items from the Vehicle before lifting**. Save time, check for items first.

To Raise a Vehicle:

1. Make sure the Platform is on the ground. If it is not, move it *all the way down to the ground*.
2. Drive a Vehicle onto the Platform.

   Make sure all four wheels are fully on the Platform, not on the ramp or the side structure. Make sure the Vehicle is centered on the Platform, width wise.

   Put the Vehicle into Park and engage the Parking Brake. Manual transmission, placed in First gear. For all vehicles, chock the rear wheels to ensure the vehicle cannot roll backward.
3. On the Power Unit, press and hold **Up**.
4. When the desired height is reached, release **Up**, then press and hold **Down** for two or three seconds to lower the platform onto a Safety Lock.
5. Check around the Vehicle and the Platform to make sure everything looks safe. If an issue occurs, address it before proceeding.

   If not using the Lift actively, turn the ***Power Disconnect*** to **Off.**

⚠ **CAUTION** The ***Power Disconnect must*** be in the **OFF** position when the Lift is not in use.

To Lower a Vehicle:

1. Make sure the Platform is clear underneath.
2. **Power Disconnect** is turned to **ON**.
3. On the Power Unit, press and hold **Up** for 4 or 5 seconds, then press and hold **Down**.

Note: Pressing and holding **Up** for four or five seconds is required to move the platform off the Safety Locks.

4. Press and hold down the safety lock release button, while holding the Down lever.
5. Once the Platform completely returns to the ground, release **Down**.
6. If not using the Lift any further, turn the **ON/OFF Switch** to **OFF**.
7. Make sure it is safe to drive the Vehicle off the Lift.
8. Drive the Vehicle off of the Platform.

Maintenance

⚠ **DANGER** Before performing any maintenance on your Lift, make sure it is completely disconnected from power. Do not reconnect it until all maintenance procedures are safely finished. The Lift uses electrical energy; if your organization has Lockout/Tagout policies, make sure to implement them ***before*** performing any maintenance. If you come into contact with high voltage/current, you may be injured or killed.

If worn, damaged, or broken parts need replacement, ***ONLY*** use parts from (or approved by) the original equipment manufacturer (OEM) or parts that meet the OEM's specifications.

⚠ **WARNING** If non-approved parts are installed, including those that do not meet the specifications of the original equipment manufacturer, you void your warranty and compromise the safety of everyone who installs or uses the Lift.

To maintain your Lift:

- **Daily**: Keep the Lift clean. Wipe up any spills, clean any dirt.
- **Daily**: Make a visual inspection of all moving parts and check for damage or excessive wear. Replace any damaged or worn parts before using the Lift.

⚠ **DANGER** Do not use the Lift if the Lifting Cables are damaged or extremely worn. If a Vehicle is raised and damage or extreme wear is noticed, very carefully lower the Vehicle to the ground; if this can be done safely. If it cannot be done safely, evacuate the area and make arrangements with trained lift service personnel to lower the Vehicle. When the Lift is on the ground, take it out of service, disconnect it from power, and make arrangements with trained lift service personnel to fix the damage and/or wear.

- **Daily**: Make sure the Safety Lock is working correctly.

⚠ **WARNING** Do ***not*** use a Platform if its Safety Lock is damaged or excessively worn.

- **Weekly**: Check all Controls, including the Emergency Stop, to make sure all are functioning.
- **Weekly**: Check all Labels on the Lift. Replace them if they are illegible or missing.
- **Monthly**: Check Hydraulic Fluid levels. Refill if low.
- **Monthly**: Grease all lubrication points on the Lift.
- **Monthly**: Lubricate the wire rope (Cables). Use a wire-rope lubricant such as 90-WT gear oil or ALMASOL® Wire Rope Lubricant.
- **Monthly**: Check Cable connections, bolts, and pins for proper mounting and torque.
- **Every two months**: Check all Anchor Bolts to make sure they are correctly tightened. If they are not, retighten them.
- **As needed**. Take the Lift out of service and then replace the Lifting Cables if there are signs of damage or extreme wear.

⚠ **WARNING** Do not operate the Lift if there are maintenance issues; instead, take the Lift out of service, then contact the dealer, visit **bendpak.com/support**, email **support@bendpak.com**, or call **(800) 253-2363**.

Lubricating the Lift

To properly maintain your lift and to provide years of service, it's important to periodically inspect and lubricate key areas as needed. There are several lubrication points on the Lift.

- **Inside of the Crosstube Gussets**. Inside each post where the Crosstube Gusset rides, for a total of eight areas. (Lube with white lithium grease monthly).
- **Under the Cable Sheaves**. Sheave pins under the Powerside Runway (apply red lithium grease during assembly and as required thereafter). Put a small amount of red lithium grease on each lubrication point before you use the Lift and monthly after putting the Lift into service. The following graphic shows the lubrication points on the lift.

Below Graphic for Illustration Purposes Only

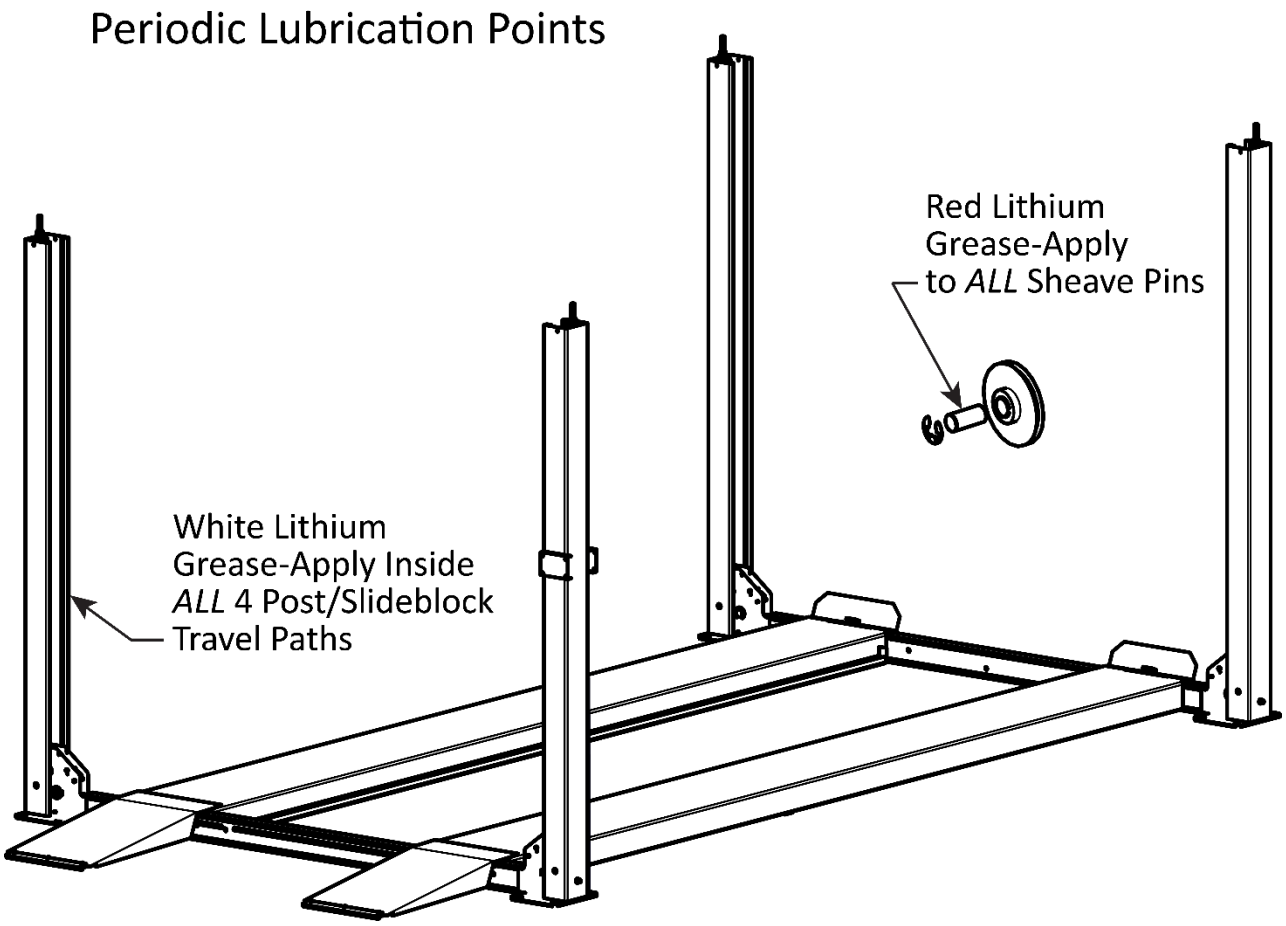

Wire Rope Inspection and Maintenance

The Lift's wire rope should be inspected regularly:

- Lifting Cables should be replaced when there are visible signs of damage or extreme wear. ***Do not use the Lift if it has damaged or worn cables; if so, take it out of service!***

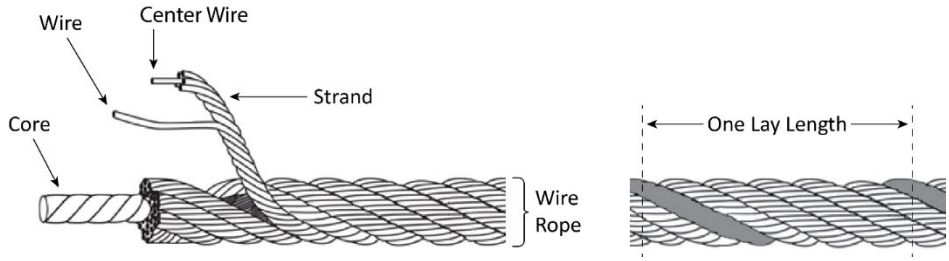

- Wire rope should be maintained in a well-lubricated condition at all times.

  Wire rope is only fully protected when each wire strand is lubricated both internally and externally. Excessive wear shortens the life of wire rope. Use a wire-rope lubricant that penetrates to the core of the rope and provides long-term lubrication between each individual strand, such as 90-WT gear oil or ALMASOL® Wire Rope Lubricant. To make sure that the inner layers of the rope remain well lubricated, lubrication should be done at least every three months during normal operation.

- All Sheaves and guide rollers that contact moving wire rope should be given regular visual checks for surface wear and lubricated to make sure they run freely. This should be done every three months during normal operation.

  For all sheave axles, use standard wheel bearing grease. For all Sheaves and/or guide rollers, use 90-WT gear oil or a similar heavy lubricant, applied by any method including pump/spray dispensing, brush, hand, or swabbing.

- How often should you inspect?

  Wire rope should be visually inspected at least once each day when in use, as suggested by American Petroleum Institute's Recommended Practice 54 guidelines. Any wire rope that meets the criteria for removal must be immediately replaced.

- When should you replace wire rope due to broken wires?

  Wire rope should be removed from service if you see six randomly distributed broken wires within any one lay length (where a single strand makes a full turn around the rope) or three broken wires in one strand within one lay length.

- Are there other reasons to replace your wire rope?

  Yes. Corrosion that pits the wires and/or connectors, evidence of kinking, crushing, cutting, bird-caging, or a popped core, wear that exceeds 10% of a wire's original diameter, or heat damage.

- How do you find broken wires?

  a. Relax your rope to a stationary position and move the pick-up points off the Sheaves. Clean the surface of the rope with a cloth — a wire brush, if necessary — so you can see any breaks.

  b. Flex the rope to expose any broken wires hidden in the valleys between the strands.

  c. Visually check for any broken wires. One way to check for crown breaks is to run a cloth along the rope to check for possible snags. With an awl, probe between wires and strands and raise any wires that appear loose.

Fastener Torque Table

FASTENER TORQUE CHART

	Bolt Grade (SAE)	SAE Grade 0-1-2			SAE Grade 5			SAE Grade 8			Socket Head Cap Screw SAE Grade		
	Bolt Class (Metric)	4.6	Metric Class 4.6		8.8	Metric Class 8.8		10.9	Metric Class 10.9		12.9	Metric Class 12.9	
Bolt Size (SAE)	Bolt Size (Metric)	Tightening Torque			Tightening Torque			Tightening Torque			Tightening Torque		
		Lubricated (ft-lbs)	Zinc Plated (ft-lbs)	Plain & Dry (ft-lbs)	Lubricated (ft-lbs)	Zinc Plated (ft-lbs)	Plain & Dry (ft-lbs)	Lubricated (ft-lbs)	Zinc Plated (ft-lbs)	Plain & Dry (ft-lbs)	Lubricated (ft-lbs)	Zinc Plated (ft-lbs)	Plain & Dry (ft-lbs)
1/4-20	M6 x1.0	2.3	2.6	3.0	5.8	6.6	7.7	8.3	9.4	11.1	9.7	11.0	13.0
5/16-18	M8 x 1.25	3.8	4.3	5.0	9.7	11.0	13.0	13.9	15.8	18.5	16.3	18.4	21.7
3/8-16	M10 x 1.50	10.8	12.3	14.4	27.9	31.6	37.2	39.9	45.2	53.2	46.7	52.9	62.2
7/16-14	N/A	24.0	27	30.0	35.0	42	50.0	55.0	59	70.0	61.0	68	76.0
1/2-13	M12 x 1.75	18.9	21.4	25.2	48.7	55.1	64.9	69.6	78.9	92.8	81.4	92.2	108.5
9/16-12	M14 x 2.00	30.2	34.2	40.2	77.8	88.1	103.7	111.3	126.1	148.4	130.0	147.4	173.4
5/8-11	M16 x 2.00	47	53	62	121	137	161	173	196	230	202	229	269
3/4-10	M18 x 2.50	65	73	86	167	189	222	239	270	318	279	316	372
7/8-9	M22 x 2.50	136	155	182	320	365	430	460	515	600	510	575	640

WARNING! Prior to Installation, inspect all accompanying manuals, parts lists and catalogs to ensure you have all the necessary parts. Identify all fasteners and their proper torque settings as illustrated on this chart. Proper torquing practices cannot be over emphasized. Torque values are provided as a convenient method of achieving correct pre-loading of highly stressed fasteners. If the fasteners are not properly plated, the fastener threads are not clean and free of deformation, or are not properly lubricated, the correct fastener pre-load will not be achieved even though the given torque value is reached. For this reason, it is critical that all fasteners be inspected for proper plating, thread form and correctly lubricated prior to torquing. Failure to verify a fastener's serviceability or to correctly lubricate the fastener prior to assembly and torquing will result in the fastener not being properly pre-loaded and subsequent failure of the fastener may occur. The torque values can only be achieved if the nut (or tapped hole) has a proof load greater than or equal to the bolt's minimum ultimate tensile strength. Clamp loads estimated as 75% of proof load for specified bolts. Torque values are listed in foot-pounds. Torque wrenches should be calibrated on an annual basis. Never use an impact driver on a torque multiplier.

Troubleshooting

This section describes how to troubleshoot the Lift.

Important: If the Lift is not functioning correctly, take it out of service until it is fixed. All repair work ***must*** be done by qualified personnel. If issues continue, take the Lift out of service, then contact the dealer, visit **bendpak.com/support**, email **support@bendpak.com**, or call **(800) 253-2363 x196**.

⚠ **WARNING** The Lift uses electrical energy; if your organization has Lockout/Tagout policies, ensure to implement them ***before*** performing any maintenance or troubleshooting.

Lift does not raise or does not lower, once raised.	Check the Hydraulic Fluid level in the reservoir. Make sure there is no air in the Hydraulic System. Inspect Hydraulic Lines for pinching or leaking. Check that the Power Unit is getting power. If the Hydraulic Fluid is dirty, replace it with clean fluid. Make sure Lift is not overloaded.
Platforms move erratically or squeak when in use.	Move the platforms up and down a few times to flush any residual air from the Hydraulic System.
Lift does not stay up.	Check for leaking Hydraulic Fluid. Make sure the Lift remains on Safety Locks.
Motor not running.	Check the connection to the power source; make sure it is plugged in and of the appropriate voltage. Compare the wiring diagram to the lift's wiring.
Hydraulic Fluid is dirty.	Replace the dirty fluid with clean, approved Hydraulic Fluid: any general purpose ISO-32, ISO-46, or ISO-68 hydraulic oil; Dexron III, Dexron VI, Mercon V, Mercon LV, Shell Tellus S4 / S3 / S2; or a synthetic, multi-vehicle automatic transmission fluid.
Lift makes odd noises.	Lubricate the bushings on the Sheaves on the sides of the crossbeams using white lithium grease. If the Lift is new, a break-in period may be needed; run the Lift several times each day. If the noises persist, contact BendPak Support.

If issues continue with the Lift, take it out of service, then contact the dealer, go to **bendpak.com/support**, email **support@bendpak.com**, or call **(800) 253-2363**.

Disposing of Hydraulic Fluid

Hydraulic Fluid ***cannot*** be disposed of by placing it into the trash or dumping it onto any ground area or waterway. It has toxic ingredients that are harmful to any environment, animal, or person.

Instead, either recycle it or drop it off at a hazardous waste collection facility.

Rags and/or granular absorbents that have soaked up Hydraulic Fluid should also be treated like hazardous waste and be disposed of at a hazardous waste collection facility.

To find an appropriate facility:

- Local automotive parts stores, auto care facilities, or automobile dealerships may accept fluid for recycling or, in some cases, for disposal. Contact them for more information.
- Cities, counties, and states often support both recycling facilities and hazardous waste collection facilities. Contact them to see if and where they have these programs.
- For large amounts of fluid, consider contacting a commercial waste disposal company.
- In all cases, the best approach is to find an appropriate facility and contact them — in advance — to ask them: what kinds of fluids they accept, what kind of containers it must be in, what hours they are open, their location, and any other information specific to their facility.
- To find an appropriate facility, visit the website **earth911.com**.

Wiring Diagrams

⚠ WARNING All electrical work ***must*** be performed by a ***Licensed Electrician*** in accordance with all applicable local and national electrical codes. ***Damage caused by improper electrical installation may void your warranty***.

⚠ WARNING An Electrical Disconnect Switch and a Thermal Disconnect must be provided and installed by a licensed, Electrician.

⚠ WARNING Failure to connect the Motor frame to equipment Ground by using the grounding cord, green screw, or green wire provided, may result in serious electric shock.

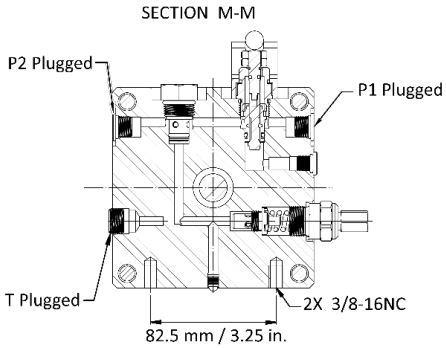

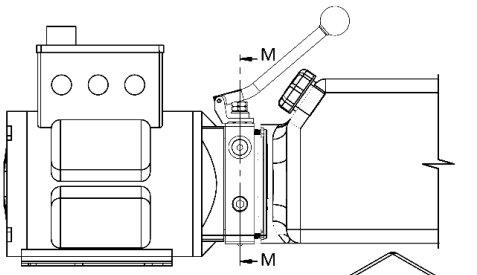

5585705
Electrical Schematic
208-230 VAC, 1 Ph., 50/60 Hz., 2HP

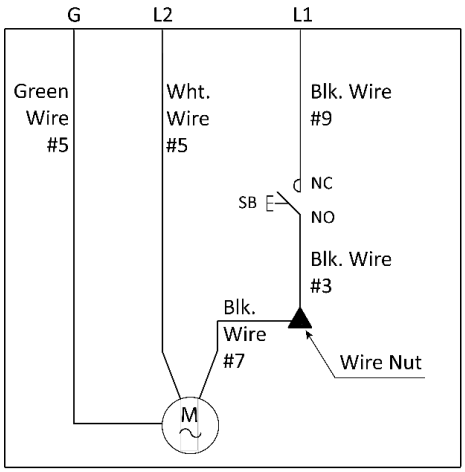

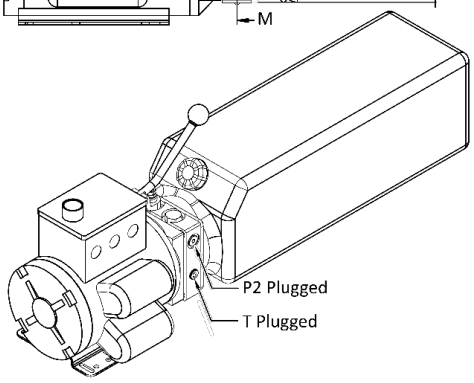

5585005
Electrical Schematic
208-230 VAC, 1 Ph., 50/60 Hz., 3HP

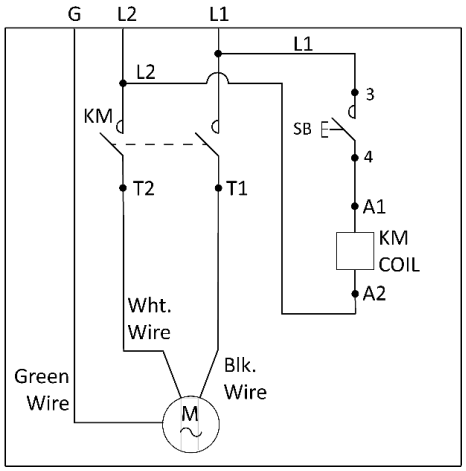

LABELS

PN 5905311

A

CLEAR ADHESIVE
DOES NOT PRINT YELLOW.

Total of 8

PN 5905556

B

PN 5905103

C

PN 5905612

D

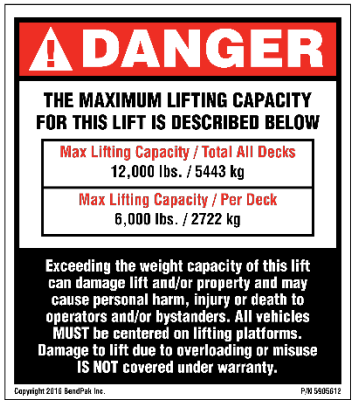

PN 5905613

E

PN 5905940

F

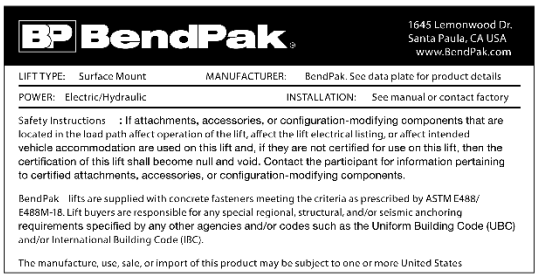

BendPak

1645 Lemonwood Dr.
Santa Paula, CA USA
www.BendPak.com

LIFT TYPE: Surface Mount MANUFACTURER: BendPak. See data plate for product details

POWER: Electric/Hydraulic INSTALLATION: See manual or contact factory

Safety Instructions : If attachments, accessories, or configuration-modifying components that are located in the load path affect operation of the lift, affect the lift electrical listing, or affect intended vehicle accommodation are used on this lift and, if they are not certified for use on this lift, then the certification of this lift shall become null and void. Contact the participant for information pertaining to certified attachments, accessories, or configuration-modifying components.

BendPak lifts are supplied with concrete fasteners meeting the criteria as prescribed by ASTM E488/E488M-18. Lift buyers are responsible for any special regional, structural, and/or seismic anchoring requirements specified by any other agencies and/or codes such as the Uniform Building Code (UBC) and/or International Building Code (IBC).

The manufacture, use, sale, or import of this product may be subject to one or more United States

PN 5905377

G

NOTICE

If attachments, accessories, or configuration modifying components used on this lift are located in the load path and affect operation of the lift, affect the lift electrical listing, or affect intended vehicle accommodation; and if they are not certified for use on this lift, then the certification of this lift shall become null and void. Contact the participant for information pertaining to certified attachments, accessories, or configuration modifying components.

www.autolift.org ©2011 by ALI, Inc. ALI / WLSIA01

PN 5905138

H

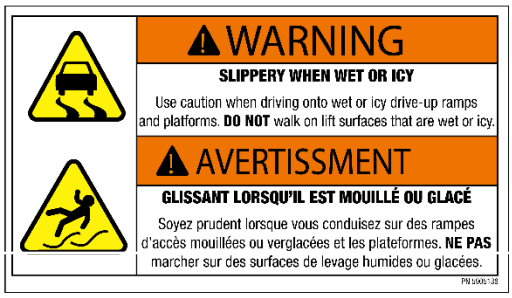

WARNING

SLIPPERY WHEN WET OR ICY

Use caution when driving onto wet or icy drive-up ramps and platforms. **DO NOT** walk on lift surfaces that are wet or icy.

AVERTISSMENT

GLISSANT LORSQU'IL EST MOUILLÉ OU GLACÉ

Soyez prudent lorsque vous conduisez sur des rampes d'accès mouillées ou verglacées et les plateformes. **NE PAS** marcher sur des surfaces de levage humides ou glacées.

PN 5905138

J

PN 5906044

K

PN 5905775

CALIFORNIA PROPOSITION 65

WARNING

WARNING!This product can expose you to chemicals including styrene and vinyl chloride which are on the list of over 900 chemicals identified by the State of California to cause cancer, birth defects or reproductive harm. ALWAYS use this product in accordance with the manufacturer's instructions.

For more information, go to www.p65warnings.ca.gov.

PN 5905775

Views of Powerside Post

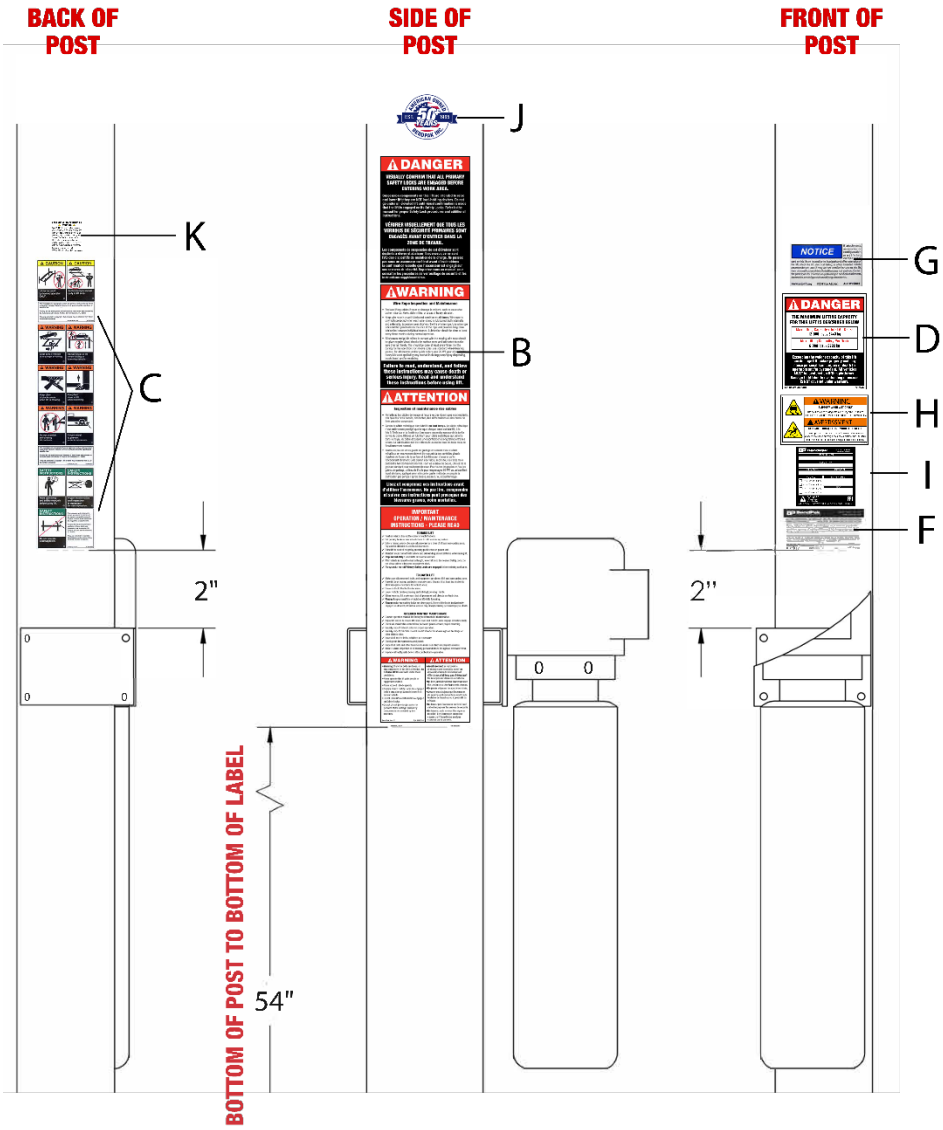

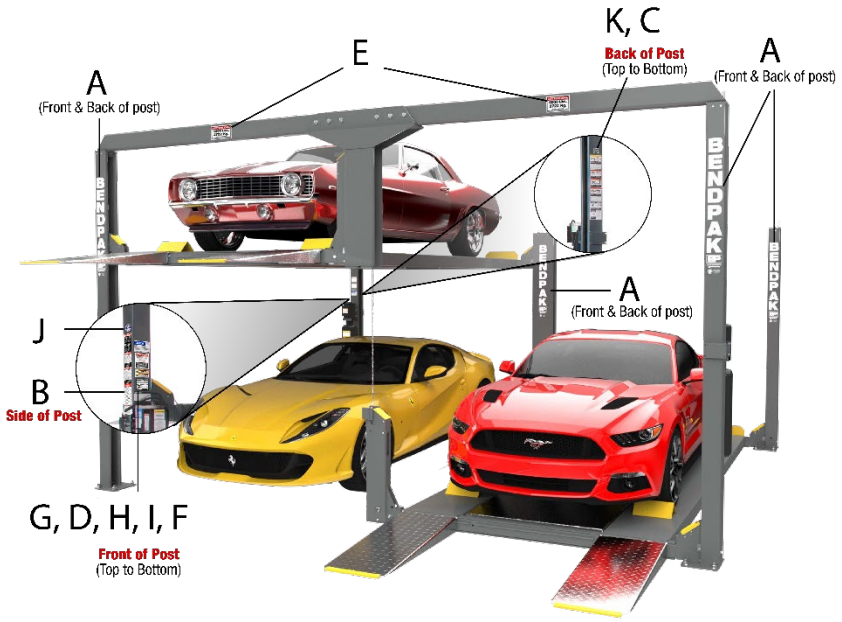

Parts Drawings

PL-12000DP

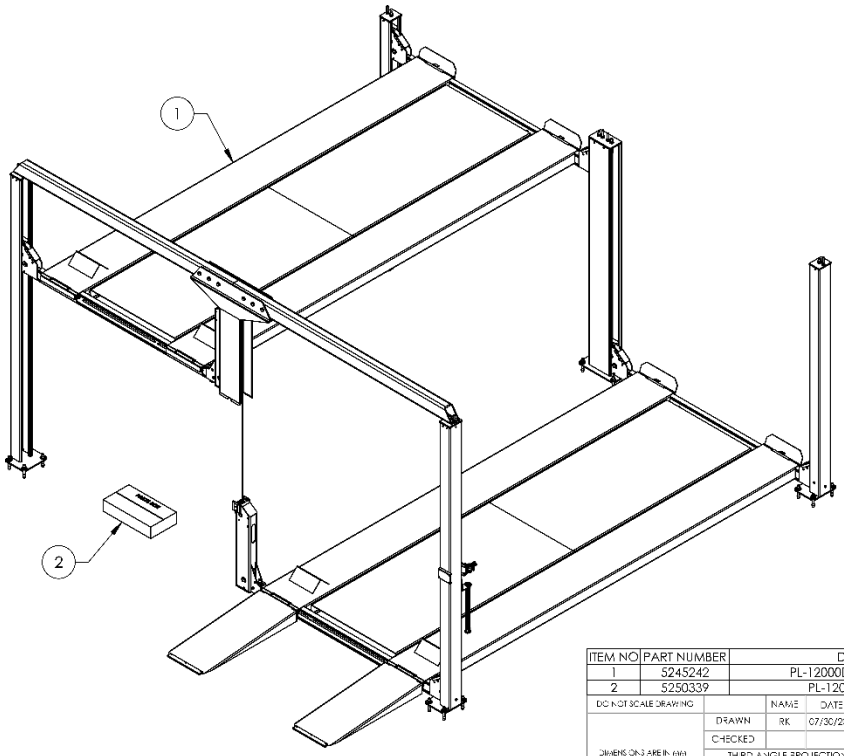

ITEM NO	PART NUMBER	DESCRIPTION	QTY	REV
1	5245242	PL-12000DP SUPERSTRUCTURE	1	F
2	5250339	PL-12000DP PARTS BOX	1	E

DO NOT SCALE DRAWING

	NAME	DATE
DRAWN	RK	07/30/2021
CHECKED		

BendPak
1645 LEMONWOOD DR.
SANTA PAULA, CA 93060

DIMENSIONS ARE IN: MM

THIRD ANGLE PROJECTION

TITLE: PL-12000DP PRODUCTION LIFT VER A

SIZE A | DWG. NO. 5260663 | REV G

SCALE: 1:40 | SHEET 1 OF 5

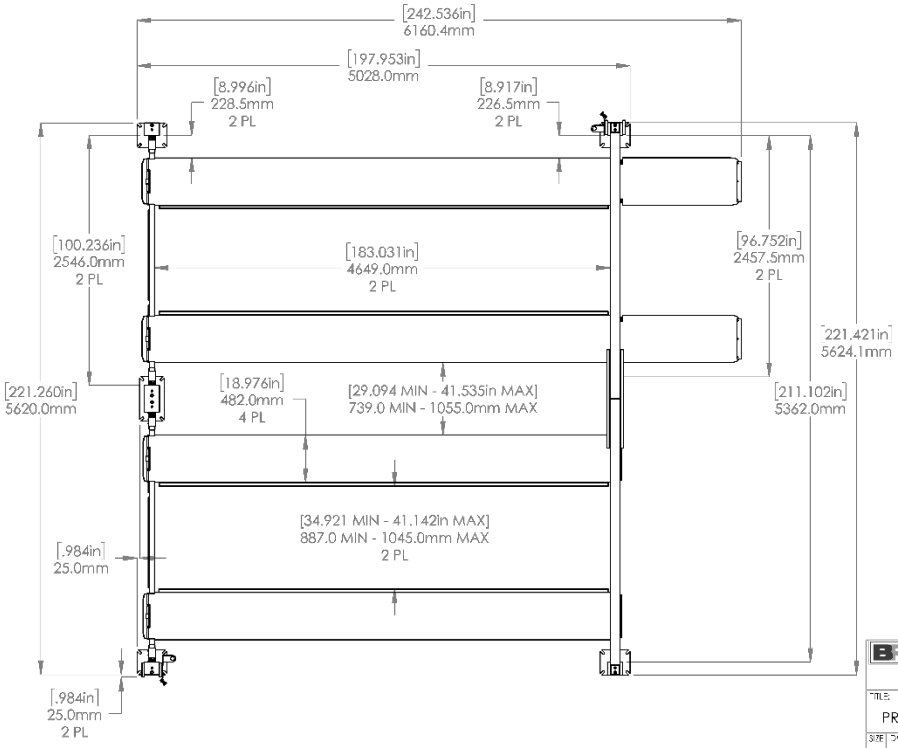

BendPak
1645 LEMONWOOD DR.
SANTA PAULA, CA 93060

TITLE: PL-12000DP PRODUCTION LIFT VER A

SIZE A | DWG. NO. 5260663 | REV G

SCALE: 1:42 | SHEET 2 OF 5

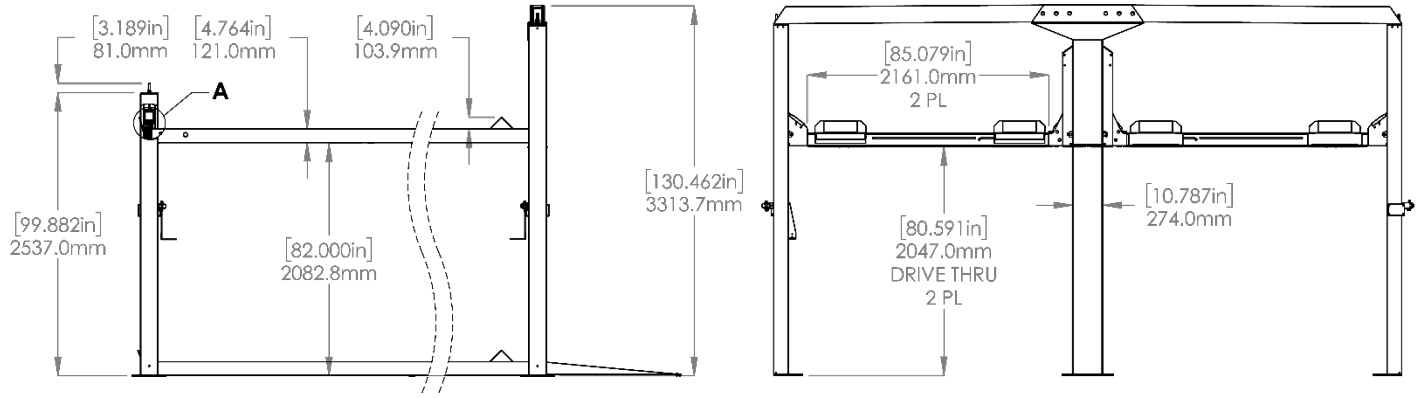

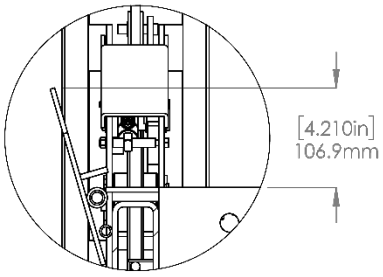

DETAIL A
SCALE 1 : 6

BendPak
1645 LEMONWOOD DR.
SANTA PAULA, CA 93060
TITLE: PL-12000DP PRODUCTION LIFT VER A
SIZE A | DWG. NO. 5260663 | REV G
SCALE: 1:50 | SHEET 3 O

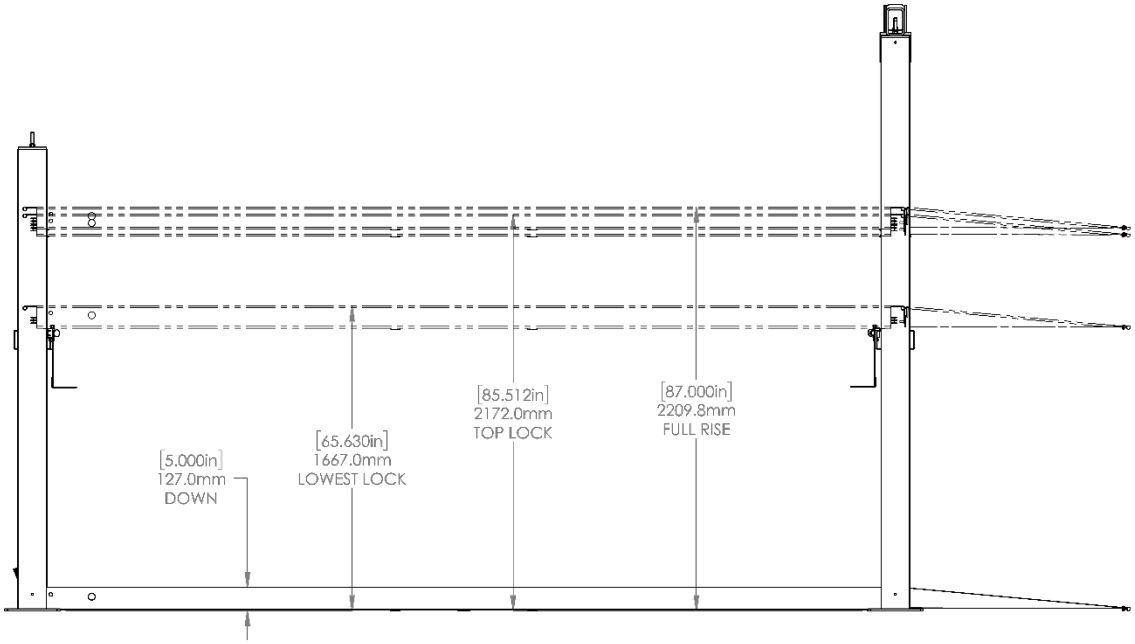

BendPak
1645 LEMONWOOD DR.
SANTA PAULA, CA 93060
TITLE: PL-12000DP PRODUCTION LIFT VER A
SIZE A | DWG. NO. 5260663 | REV G
SCALE: 1:25 | SHEET 4 OF 5

5174107 - PACKAGE 1				
ITEM NO.	PART NUMBER	DESCRIPTION	QTY.	REV
1	5216155	HD-7/9/973P, PL-12000 CROSSTUBE ASSEMBLY, SMALL WINDOW	1	A
2	5216156	HD-9/973P, PL-12000 CROSSTUBE ASSEMBLY, LARGE WINDOW	1	A
3	5216188	PL 12000DP POWER SIDE RAMP ASSEMBLY	1	A
4	5600205	HD-9/7500BLX OFF SIDE RAMP WELDMENT	1	K
5	5601741	PL-12000DP TOP TUBE WELDMENT, RIGHT	1	C
6	5601769	PL-12000DP TOP TUBE WELDMENT, LEFT	1	B
7	5601743	PL-12000DP DOUBLE POST WELDMENT, FULL	1	B
8	5601736	PL-12000DP REAR SAFETY LADDER WELDMENT, TALL	2	C
9	5601738	PL-12000DP CENTER SAFETY LADDER WELDMENT, SHORT	2	B
10	5545025	WASHER, M16 x 30mm FLAT	8	-
11	5535008	NUT M16 x 2 NL	16	-
12	5600890	HD 7/7500/9, PL 12000 TIRE STOP PLATE WELDMENT	4	F
13	5174705	HD-7/9 EXTENDED ALUMINUM APPROACH RAMP KIT	1	D

5174108 - PACKAGE 2				
ITEM NO.	PART NUMBER	DESCRIPTION	QTY.	REV
1	5601134	HD-7/9/7500 POWER SIDE POST WELDMENT	1	B
2	5601739	PL-12000DP POST WELDMENT, TALL	1	A
3	5601740	PL-12000DP POWER POST WELDMENT, TALL	1	A
4	5601133	HD 7/9/7500 OFF SIDE POST WELDMENT	1	B
5	5216082	PL-12000DP REAR CROSSTUBE ASSEMBLY, SMALL WINDOW	1	E
6	5216083	PL-12000DP REAR CROSSTUBE ASSEMBLY, LARGE WINDOW	1	E
7	5216188	PL-12000DP POWER SIDE RAMP ASSEMBLY	1	A
8	5600205	HD-9/7500BLX OFF SIDE RAMP WELDMENT	1	K
9	5601737	PL-12000DP SAFETY LADDER WELDMENT	4	C
10	5716116	PLASTIC RAMP COVER, 1100mm	8	A
11	5716117	PLASTIC RAMP COVER, 1110mm	8	A
12	5250339	PL-12000DP PARTS BOX	1	E

5174109 - PACKAGE 3				
ITEM NO	PART NUMBER	DESCRIPTION	QTY	REV
1	5601742	PL-12000DP SHORT POST WELDMENT	1	C
2	5210208	HD-7/9/HDSO-14 WIDE ALUMINUM SOLID DECK KIT	2	E

BendPak
1645 LEMONWOOD DR.
SANTA PAULA, CA 93060

TITLE: PL-12000DP PRODUCTION LIFT VER A

SIZE A | DWG. NO. 5260663 | REV G

SCALE: -- | SHEET 5 OF 5

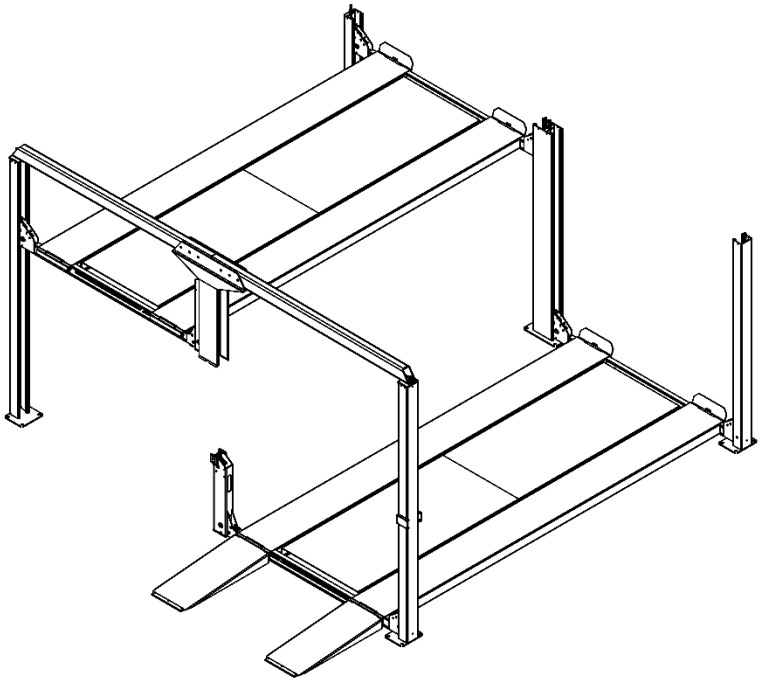

ITEM NO	PART NUMBER	DESCRIPTION	QTY	REV
1	5601134	HD-7/9/7500 POWER SIDE POST WELDMENT	1	B
2	5601739	PL-12000DP POST WELDMENT, TALL	1	A
3	5601740	PL-12000DP POWER POST WELDMENT, TALL	1	A
4	5601133	HD-7/9/7500 OFF SIDE POST WELDMENT	1	B
5	5216155	HD-7/9/973P, PL-12000 CROSSTUBE ASSEMBLY, SMALL WINDOW	1	A
6	5216156	HD-9/973P, PL-12000 CROSSTUBE ASSEMBLY, LARGE WINDOW	1	A
7	5216082	PL-12000DP REAR CROSSTUBE ASSEMBLY, SMALL WINDOW	1	E
8	5216083	PL-12000DP REAR CROSSTUBE ASSEMBLY, LARGE WINDOW	1	E
9	5216188	PL-12000DP POWER SIDE RAMP ASSEMBLY	2	A
10	5600205	HD-9/7500BLX OFF SIDE RAMP WELDMENT	2	K
11	5601741	PL-12000DP TOP TUBE WELDMENT, RIGHT	1	C
12	5601769	PL-12000DP TOP TUBE WELDMENT, LEFT	1	B
13	5601742	PL-12000DP SHORT POST WELDMENT	1	C
14	5601743	PL-12000DP DOUBLE POST WELDMENT, FULL	1	B
15	5601736	PL-12000DP REAR SAFETY LADDER WELDMENT, TALL	2	C
16	5601737	PL-12000DP SAFETY LADDER WELDMENT	4	C
17	5601738	PL-12000DP CENTER SAFETY LADDER WELDMENT, SHORT	2	B
18	5545025	WASHER, M16 x 30mm FLAT	8	-
19	5535008	NUT M16 x 2 NL	16	-
20	5716116	PLASTIC RAMP COVER, 1100mm	8	A
21	5716117	PLASTIC RAMP COVER, 1110mm	8	A
22	5210208	HD-7/9/HDSO-14 WIDE ALUMINUM SOLID DECK KIT	2	E
23	5600890	HD-7/7500/9, PL-12000 TIRE STOP PLATE WELDMENT	4	F
24	5174705	HD-7/9 EXTENDED ALUMINUM APPROACH RAMP KIT	1	D

WHERE USED
PL-12000DP

NEXT ASSEMBLY
5260663

DO NOT SCALE DRAWING

	NAME	DATE
DRAWN	TM	10/06/2021
CHECKED		

DIMENSIONS ARE IN MM

THIRD ANGLE PROJECTION

PROPRIETARY AND CONFIDENTIAL
THE INFORMATION CONTAINED IN THIS DRAWING IS THE SOLE PROPERTY OF BENDPAK INC. ANY REPRODUCTION IN PART OR AS A WHOLE WITHOUT THE WRITTEN PERMISSION OF BENDPAK INC. IS PROHIBITED.

BendPak
1645 LEMONWOOD DR.
SANTA PAULA, CA 93060

TITLE: PL-12000DP SUPERSTRUCTURE

SIZE A | DWG. NO. 5245242 | REV F

SCALE: 1:55 | SHEET 1 OF 2

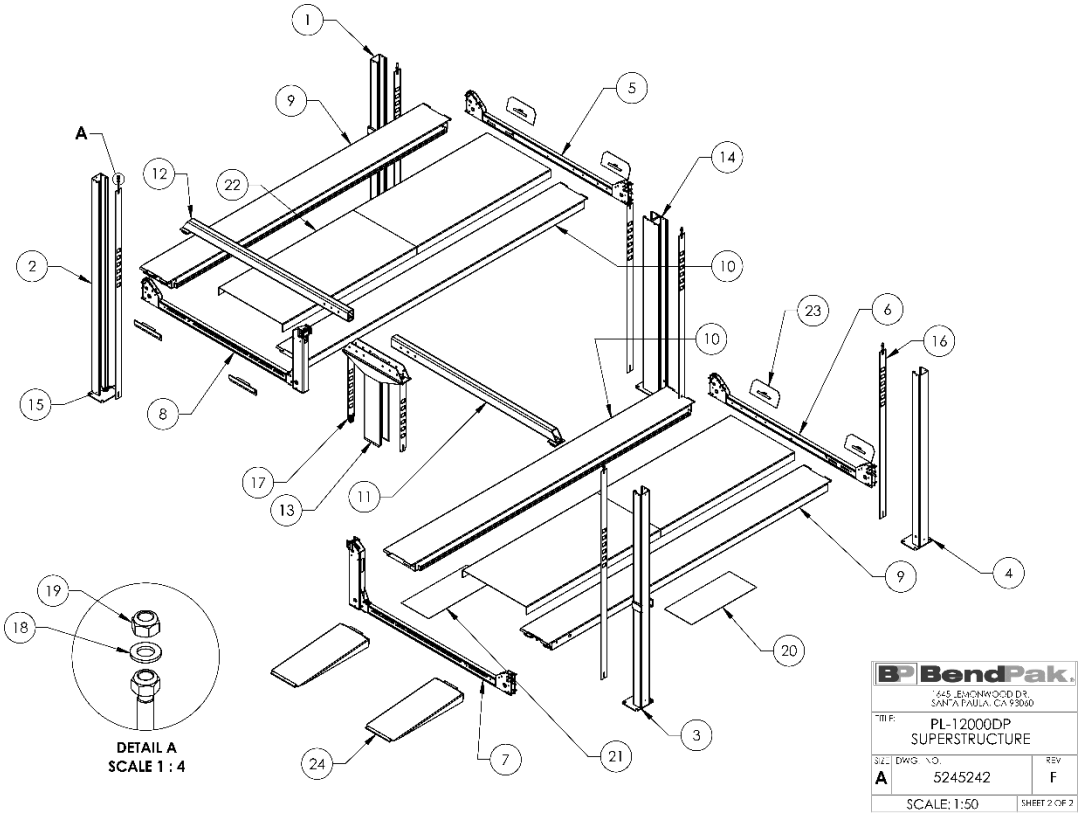

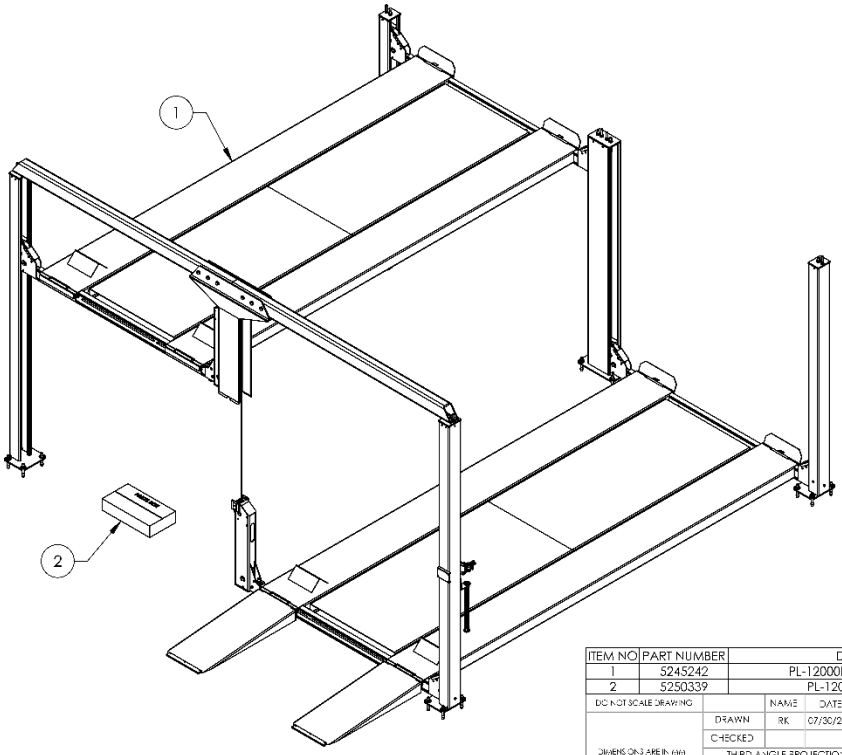

ITEM NO	PART NUMBER	DESCRIPTION	QTY	REV
1	5245242	PL-12000DP SUPERSTRUCTURE	1	F
2	5250339	PL-12000DP PARTS BOX	1	E

DO NOT SCALE DRAWING

	NAME	DATE
DRAWN	RK	07/30/202
CHECKED		

DIMENSIONS ARE IN mm

THIRD ANGLE PROJECTION

PROPRIETARY AND CONFIDENTIAL

BendPak.
1645 LEMONWOOD DR.
SANTA PAULA, CA 93060

TITLE:
PL-12000DP
PRODUCTION LIFT VER A

SIZE A | DWG. NO. 5260663 | REV G

SCALE: 1:40 | SHEET 1 OF 5

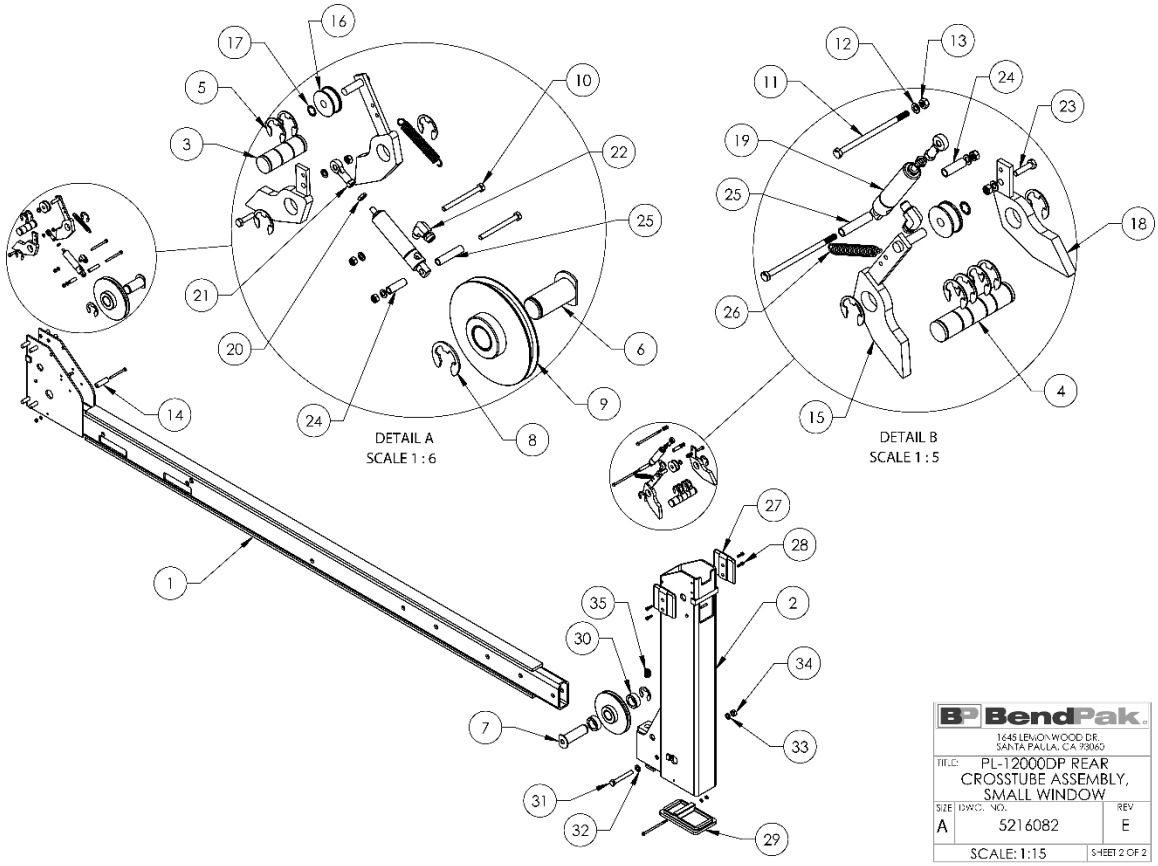

BendPak
1645 LEMONWOOD DR.
SANTA PAULA, CA 93060

TITLE: PL-12000DP REAR CROSSTUBE ASSEMBLY, SMALL WINDOW

SIZE	DWG. NO.	REV
A	5216082	E
SCALE: 1:15		SHEET 2 OF 2

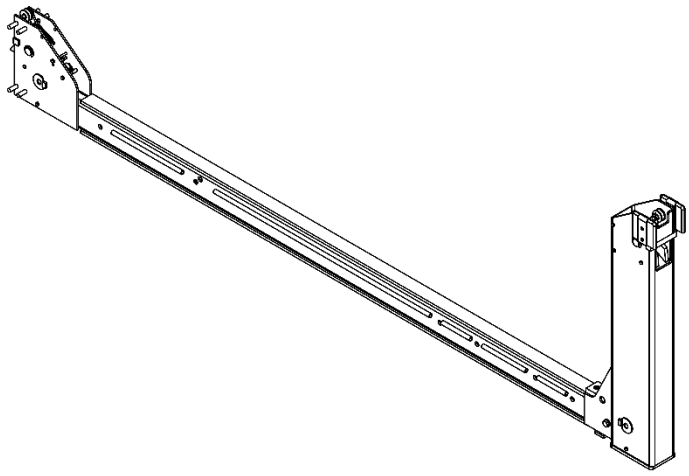

ITEM NO	PART NUMBER	DESCRIPTION	QTY	REV
1	5601735	PL-12000DP REAR CROSSTUBE WELDMENT, LARGE WINDOW	1	D
2	5601770	PL-12000DP REAR CROSSTUBE WELDMENT END, TALL	1	C
3	5746008	D4-12, HD/HDS-7/7500/9/14, HDSO-14 SAFETY PIN	1	D
4	5746648	PL-12000DP REAR CROSSTUBE END SAFETY PIN	1	A
5	5540275	E RING Ø25mm OD DIN 6799 0250	10	-
6	5600160	HD-7/7500/9 CROSSTUBE SHEAVE SHAFT WELDMENT	1	G
7	5601773	PL-12000DP REAR CROSSTUBE END SHEAVE SHAFT WELDMENT	1	A
8	5540010	E RING Ø32mm OD DIN 6799	2	-
9	5215122	HD-7/7500/9 SINGLE SHEAVE ROLLER ASSEMBLY	2	E
10	5530005	HHB M6 x 1 x 70	3	-
11	5530439	HHB M6 x 1.0 x 110 PT, CL 8.8	3	A
12	5545005	WASHER, M6 x 12mm FLAT	8	-
13	5535357	NUT M6 x 1.0, NL CL8	8	-
14	5755157	D4-12, HD-7/7500/9 CROSSTUBE SPACER Ø16 x Ø10 x 50	1	A
15	5600044	4 POST LIGHT DUTY SLACK SAFETY WELDMENT	2	F
16	5575420	HD-7/7500/9 SAFETY ROLLER	2	C
17	5505030	PUSH-ON CLIP Ø10mm SS	2	-
18	5600760	D4-12, HD/HDS LIGHT DUTY SAFETY WELDMENT	2	C
19	5502195	AIR CYLINDER, Ø19mm x 25 STROKE	2	-
20	5535230	NUT 1/4-28 JN	2	-
21	5505625	FEMALE ROD END M6 x 33	2	-
22	5550087	FTG ELB -04 COMP x -02 NPT	2	-
23	5530756	HHB M6 x 1.0 x 25mm	2	-
24	5755180	AIR CYLINDER SPACER 30mm	2	A
25	5755181	AIR CYLINDER SPACER 45mm	2	A
26	5540065	SPRING Ø13mm x 90mm, SLACK SAFETY	2	A
27	5716077	PL-12000DP POLYETHYLENE SLIDE BLOCK	2	C
28	5400957	SHCS M6 x 1.0 x 20 FT, CL 12.9	4	-
29	5716079	PL-12000DP REAR CROSSTUBE END POLYETHYLENE BOTTOM COVER	1	B
30	5565067	PL-12000DP REAR CROSSTUBE END SHEAVE SPACER	2	A
31	5535354	NUT, M12 x1.75	1	-
32	5545201	WASHER, M12 SPRING LOCK	1	-
33	5545347	WASHER M12 x 24mm FLAT, CL 8.8	1	-
34	5530009	HHB M12 x 1.75 x 90 CL8.8	1	-
35	5530463	SSS M20 x 2.5 x 25 FLAT	1	-

WHERE USED
PL-12000DP
PL-12000DPS

NOTE: UNLESS OTHERWISE SPECIFIED ___.
1. REFER TO MODEL FOR ADDITIONAL INFORMATION
2. SEE SHIPPING INSTRUCTIONS FOR FINAL PACKAGING
3. ASSEMBLE ITEMS AS SHOWN

DO NOT SCALE DRAWING

	NAME	DATE
DRAWN	TM	07/07/2022
CHECKED	OR	09/21/2022

DIMENSIONS ARE IN MM

THIRD ANGLE PROJECTION

PROPRIETARY AND CONFIDENTIAL
THE INFORMATION CONTAINED IN THIS DRAWING IS THE SOLE PROPERTY OF BENDPAK INC. ANY REPRODUCTION IN PART OR AS A WHOLE WITHOUT THE WRITTEN PERMISSION OF BENDPAK INC. IS PROHIBITED.

BendPak
1645 LEMONWOOD DR.
SANTA PAULA, CA 93060

TITLE: PL-12000DP REAR CROSSTUBE ASSEMBLY, LARGE WINDOW

SIZE	DWG. NO.	REV
A	5216083	E
SCALE: 1:15		SHEET 1 OF 2

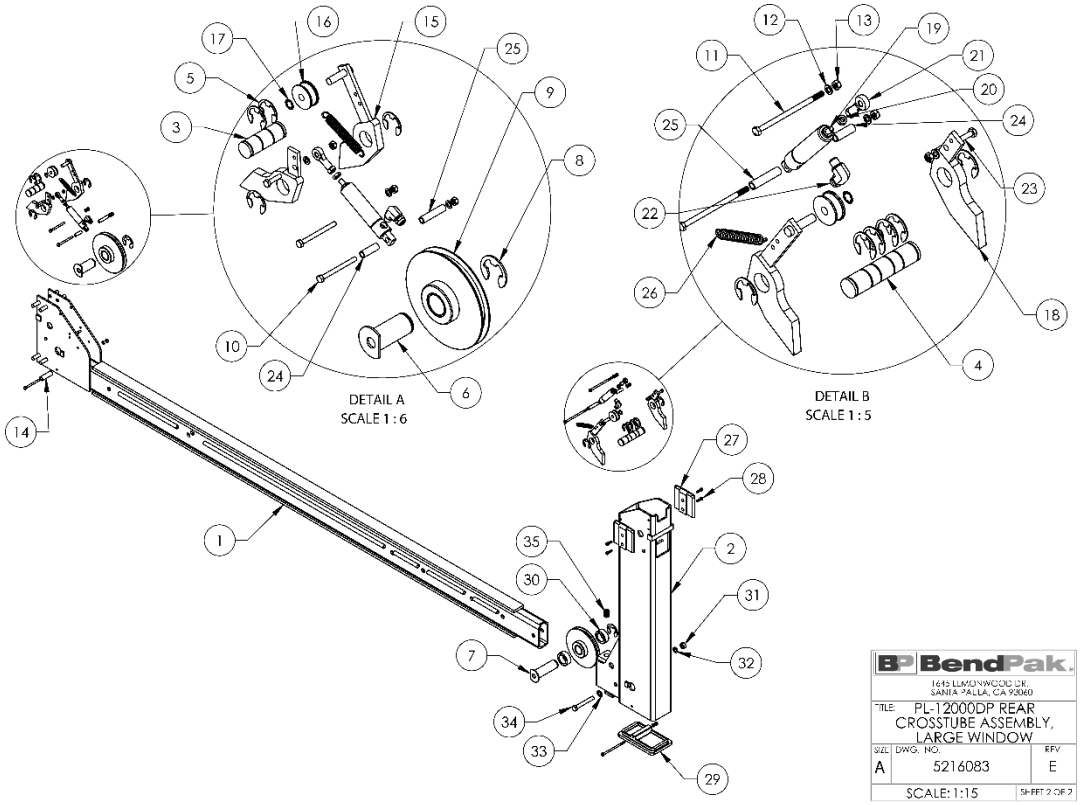

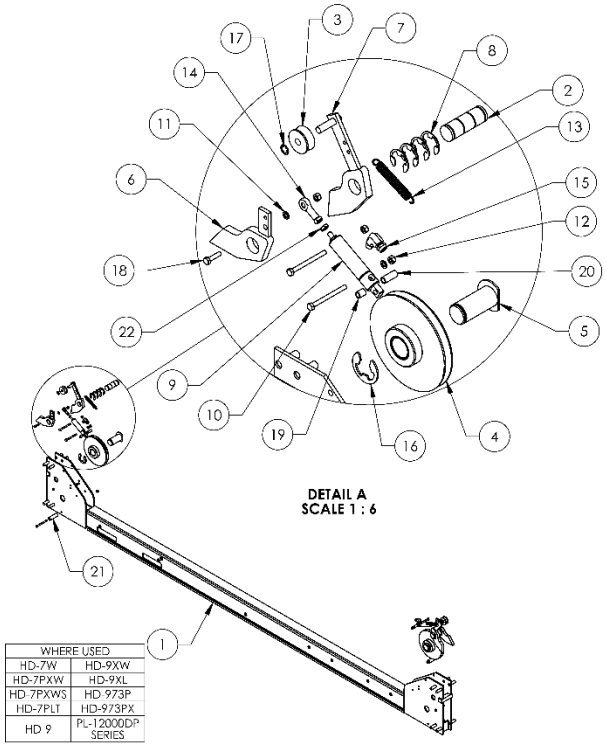

WHERE USED	
HD-7W	HD-9XW
HD-7PXW	HD-9XL
HD-7PXWS	HD-973P
HD-7PLT	HD-973PX
HD 9	PL-12000DP SERIES

ITEM NO	PART NUMBER	DESCRIPTION	QTY	REV
1	5601822	HD-7/9/973P CROSSTUBE WELDMENT, SMALL WINDOW	1	A
2	5746008	D4 12, HD/HDS 7/7500/9/14, HDSO 14 SAFETY PIN	2	D
3	5575420	HD-7/7500/9 SAFETY ROLLER	2	C
4	5215122	HD-7/7500/9 SINGLE SHEAVE ROLLER ASSEMBLY	2	E
5	5600160	HD-7/7500/9 CROSSTUBE SHEAVE SHAFT WELDMENT	2	G
6	5600760	D4-12, HD/HDS LIGHT DUTY SAFETY WELDMENT	2	C
7	5600044	4 POST LIGHT DUTY SLACK SAFETY WELDMENT	2	F
8	5540275	E RING Ø25mm OD DIN 6799 0250	8	-
9	5502195	AIR CYLINDER, Ø19mm x 25 STROKE	2	-
10	5530005	HHB M6 x 1 x 70	6	-
11	5545005	WASHER, M6 x 12mm FLAT	4	-
12	5535357	NUT M6 x 1.0 NL	8	-
13	5540065	SPRING Ø13mm x 90mm, SLACK SAFETY	2	A
14	5505625	FEMALE ROD END M6 x 33	2	-
15	5550087	FTG ELB -04 COMP x -02 NPT	2	-
16	5540010	E RING Ø32mm OD DIN 6799	2	-
17	5505030	PUSH-ON CLIP Ø10mm SS	2	-
18	5530756	HHB M6 x 1.0 x 25mm	2	-
19	5755136	AIR CYLINDER SPACER 12mm	2	A
20	5755137	AIR CYLINDER SPACER 25mm	2	A
21	5755157	D4 12, HD 7/7500/9 CROSSTUBE SPACER Ø16 x Ø10 x 50	2	A
22	5535230	NUT 1/4-28 JN	2	-

DO NOT SCALE DRAWING		NAME	DATE
	DRAWN	IM	04/29/2022
	CHECKED	OR	06/13/2022

DIMENSIONS ARE IN MM

THIRD ANGLE PROJECTION

PROPRIETARY AND CONFIDENTIAL
THE INFORMATION CONTAINED IN THIS DRAWING IS THE SOLE PROPERTY OF BENDPAK INC. ANY REPRODUCTION IN PART OR AS A WHOLE WITHOUT THE WRITTEN PERMISSION OF BENDPAK INC. IS PROHIBITED.

BendPak
1645 LIMONWOOD DR.
SANTA PAULA, CA 93060

TITLE: HD-7/9/973P, PL-12000 CROSSTUBE ASSEMBLY, SMALL WINDOW

SIZE A
DWG. NO. 5216155
REV A

SCALE: 1:20
SHEET 1 OF 1

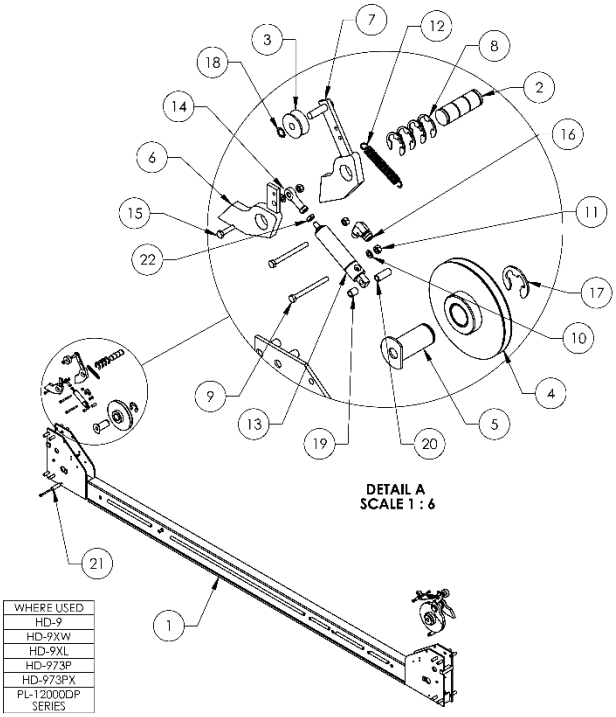

WHERE USED
HD-9
HD-9XW
HD-9XL
HD-973P
HD-973PX
PL-12000DP SERIES

ITEM NO	PART NUMBER	DESCRIPTION	QTY	REV
1	5601821	HD-9/973P CROSSTUBE WELDMENT, LARGE WINDOW	1	A
2	5746008	D4-12, HD/HDS-7/7500/9/14, HDSO-14 SAFETY PIN	2	D
3	5575420	HD-7/7500/9 SAFETY ROLLER	2	C
4	5215122	HD-7/7500/9 SINGLE SHEAVE ROLLER ASSEMBLY	2	E
5	5600160	HD-7/7500/9 CROSSTUBE SHEAVE SHAFT WELDMENT	2	G
6	5600760	D4-12, HD/HDS LIGHT DUTY SAFETY WELDMENT	2	C
7	5600044	4 POST LIGHT DUTY SLACK SAFETY WELDMENT	2	F
8	5540275	E RING Ø25mm OD DIN 6799 0250	8	-
9	5530005	HHB M6 x 1 x 70	6	-
10	5545005	WASHER, M6 x 12mm FLAT	4	-
11	5535357	NUT M6 x 1.0 NL	8	-
12	5540065	SPRING Ø13mm x 90mm, SLACK SAFETY	2	A
13	5502195	AIR CYLINDER, Ø19mm x 25 STROKE	2	-
14	5505625	FEMALE ROD END M6 x 33	2	-
15	5530756	HHB M6 x 1.0 x 25mm	2	-
16	5550087	FTG ELB -04 COMP x -02 NPT	2	-
17	5540010	E RING Ø32mm OD DIN 6799	2	-
18	5505030	PUSH-ON CLIP Ø10mm SS	2	-
19	5755136	AIR CYLINDER SPACER 12mm	2	A
20	5755137	AIR CYLINDER SPACER 25mm	2	A
21	5755157	D4-12, HD-7/7500/9 CROSSTUBE SPACER Ø16 x Ø10 x 50	2	A
22	5535230	NUT 1/4 28 JN	2	-

DO NOT SCALE DRAWING		NAME	DATE	BendPak.
	DRAWN	TM	04/29/2022	1695 LEMONWOOD DR. SANTA PAULA, CA 93060
	CHECKED	OR	6/10/2022	
DIMENSIONS ARE IN MM	THIRD ANGLE PROJECTION			TITLE: HD-9/973P, PL-12000 CROSSTUBE ASSEMBLY, LARGE WINDOW
				SIZE A — DWG. NO 5216156 — REV A
				SCALE: 1:20 — SHEET 1 OF 1

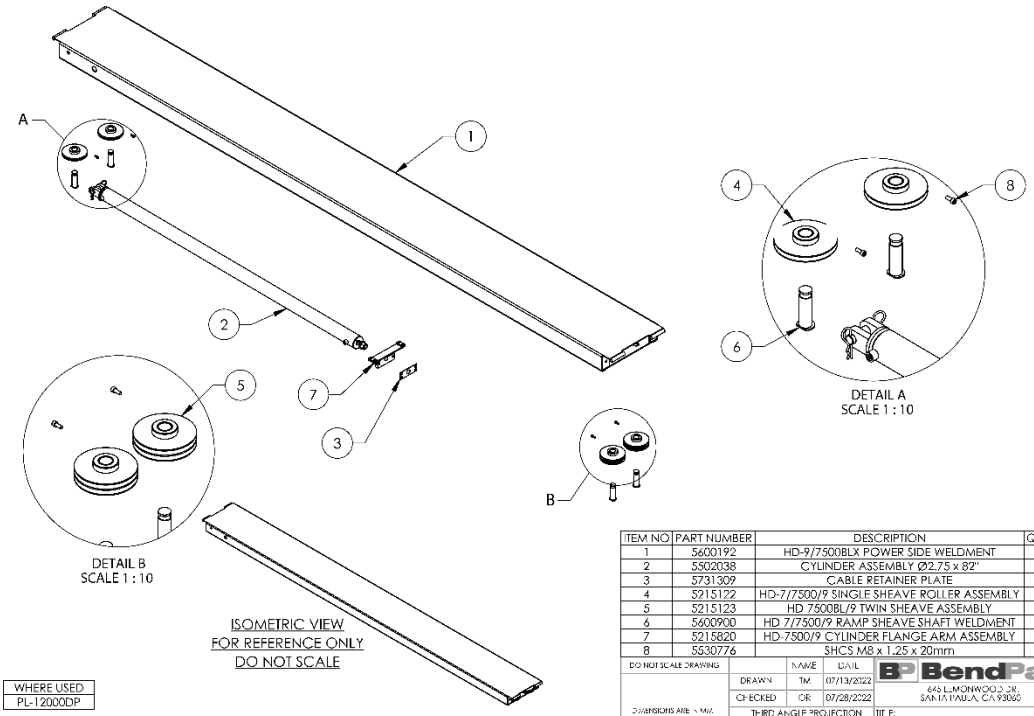

WHERE USED
PL-12000DP

ITEM NO	PART NUMBER	DESCRIPTION	QTY	REV
1	5600192	HD-9/7500BLX POWER SIDE WELDMENT	1	K
2	5502038	CYLINDER ASSEMBLY Ø2.75 x 82"	1	D
3	5731309	CABLE RETAINER PLATE	1	A
4	5215122	HD-7/7500/9 SINGLE SHEAVE ROLLER ASSEMBLY	2	E
5	5215123	HD 7500BL/9 TWIN SHEAVE ASSEMBLY	2	E
6	5600900	HD 7/7500/9 RAMP SHEAVE SHAFT WELDMENT	4	E
7	5215820	HD-7500/9 CYLINDER FLANGE ARM ASSEMBLY	1	B
8	5530776	SHCS M8 x 1.25 x 20mm	4	-

DO NOT SCALE DRAWING		NAME	DATE	BendPak.
	DRAWN	TM	07/13/2022	645 LEMONWOOD DR. SANTA PAULA, CA 93060
	CHECKED	OR	07/28/2022	
DIMENSIONS ARE IN MM	THIRD ANGLE PROJECTION			TITLE: PL-12000DP POWER SIDE RAMP ASSEMBLY
				SIZE A — DWG. NO. 5216188 — REV A
				SCALE: 1:25 — SHEET 1 OF 2

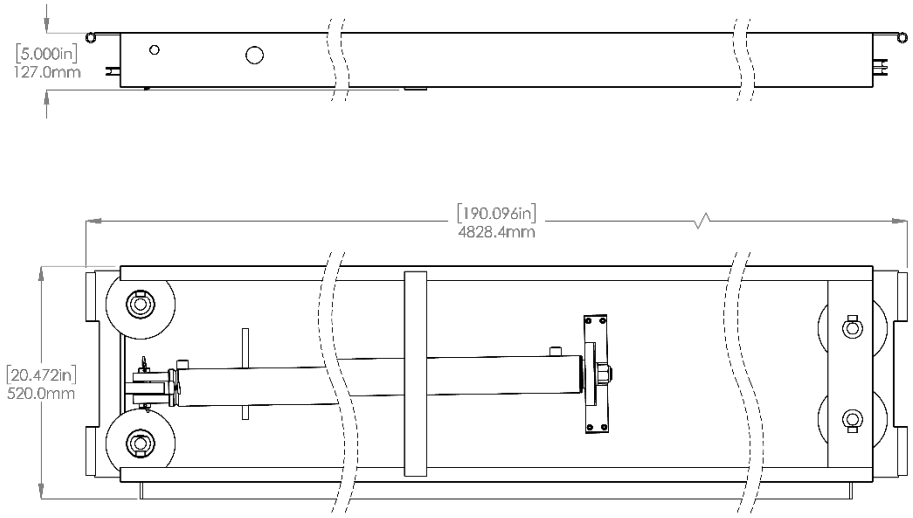

BendPak. 1645 LEMONWOOD DR. SANTA PAULA, CA 93060		
TITLE: PL-12000DP POWER SIDE RAMP ASSEMBLY		
SIZE A	DWG. NO. 5216188	REV A
SCALE: 1:10		SHEET 2 OF 2

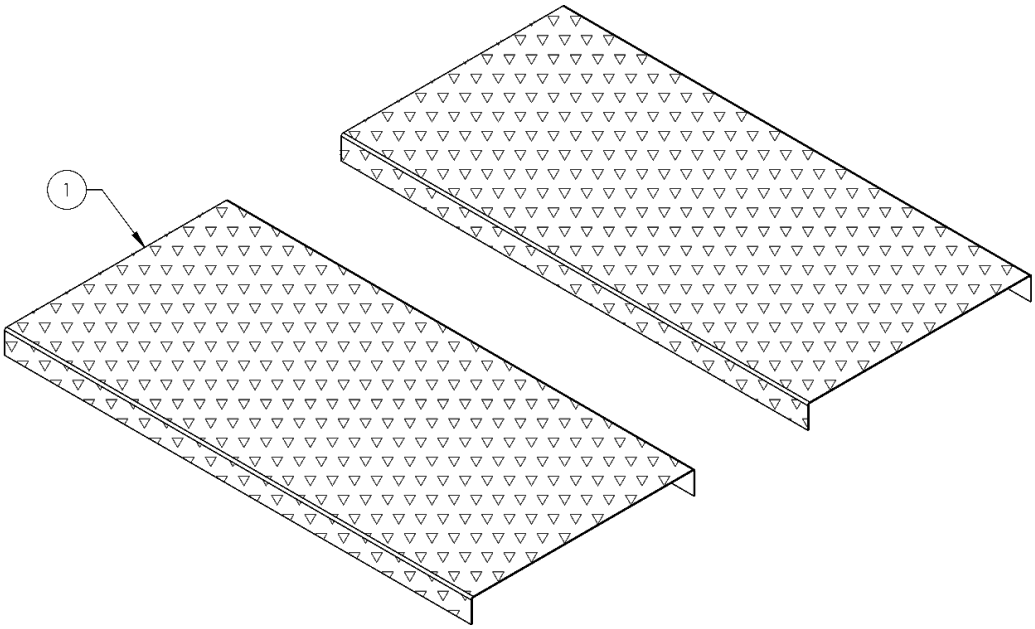

WHERE USED
HD-7MZ
HD-7PXW
HD-9AE
HD-9XW
HD-9XL
HD-9SWX
HDSO-14 SERIES
PL-12000DP

ITEM NO	PART NUMBER	DESCRIPTION	QTY	REV
1	5600712	HD-7/9/HDSO-14 WIDE ALUMINUM SOLID DECK WELDMENT	2	C

DO NOT SCALE DRAWING		NAME	DATE
	DRAWN	TM	07/19/2011
	CHECKED	OR	04/20/2020
DIMENSIONS ARE IN MM	THIRD ANGLE PROJECTION		

PROPRIETARY AND CONFIDENTIAL
THE INFORMATION CONTAINED IN THIS DRAWING IS THE SOLE PROPERTY OF BENDPAK INC. ANY REPRODUCTION IN PART OR AS A WHOLE WITHOUT THE WRITTEN PERMISSION OF BENDPAK INC. IS PROHIBITED.

BendPak. 1645 LEMONWOOD DR. SANTA PAULA, CA 93060	
TITLE: HD-7/9/HDSO-14 WIDE ALUMINUM SOLID DECK KIT	
SIZE A	DWG. NO. 5210208	REV E
SCALE: 1:18	SHEET 1 OF 1

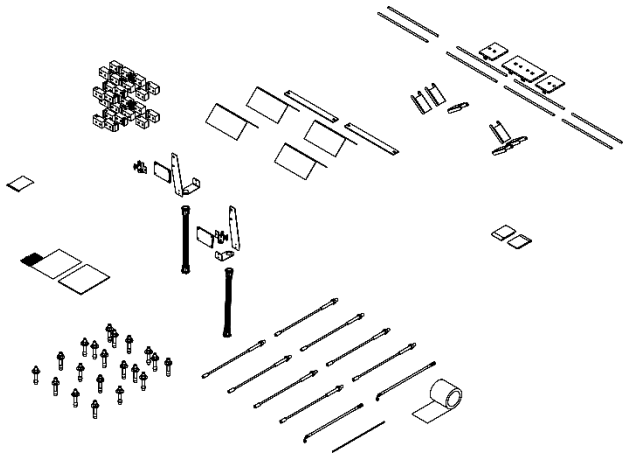

ITEM NO	PART NUMBER	DESCRIPTION	QTY	REV
1	5174102	PL-12000DP PARTS BAG	1	C
2	5600405	HD-7/9/7500, PL-12000 TOP PLATE WELDMENT	2	C
3	5601732	PL-12000DP DOUBLE TOP PLATE WELDMENT, CENTER/FRONT	1	B
4	5745014	HD 7/7500/9, PL 12000 DRIVE UP RAMP PIN	8	B
5	5716005	CROSSTUBE POLYETHYLENE SLIDE BLOCK	24	M
6	5215096	PUSH BUTTON AIR ASSEMBLY	2	G
7	5715003	POWER UNIT VIBRATION DAMPENER	2	B
8	5595712	CABLE ASSEMBLY Ø10 x 3900mm ST	1	B
9	5595714	CABLE ASSEMBLY Ø10 x 5515mm ST	1	C
10	5595627	CABLE ASSEMBLY Ø10 x 8031mm ST	1	C
11	5595718	CABLE ASSEMBLY Ø10 x 9637mm ST	1	B
12	5595713	CABLE ASSEMBLY Ø10 x 3283mm ST	1	B
13	5595715	CABLE ASSEMBLY Ø10 x 4892mm ST	1	D
14	5595717	CABLE ASSEMBLY Ø10 x 8665mm ST	1	C
15	5595719	CABLE ASSEMBLY Ø10 x 10257mm ST	1	C
16	5570022	HYDRAULIC HOSE ASSEMBLY Ø6.4 x 3380mm	2	G
17	5216139	FLEX TUBE KIT, UP TO 2000mm	2	A
18	5570795	1/4" POLY-FLO TUBING	33500mm*	-
19	5700029	HD SERIES FLEX TUBE BRACKET PLATE	2	F
20	5700033	HD/HDS FLEX TUBE ANGLE	2	E
21	5700072	WHEEL CHOCK	4	B
22	5530456	AB 3/4" x 4 - 3/4"	20	-
23	5900033	HD-9SW/SWX INSTALLATION MANUAL	1	-
24	5716630	HD-7/7500/9 CROSSTUBE COVER, PLASTIC	6	A
25	5716080	PL-12000DP REAR CROSSTUBE END TOP COVER, PLASTIC	2	A
26	5735663	HD-9 RAMP STRAP, BOLT ON	2	B
27	5210241	4 POST LIGHT DUTY CE PARTS BAG	1	A
28	5930195	ANTI-SLIP TAPE, 6" x 24ft	1	-

WHERE USED
PL-12000DP

JO NO SCALE DRAWING

DIMENSIONS ARE IN MM

	NAME	DATE
DRAWN	TM	10/08/2021
CHECKED		

THIRD ANGLE PROJECTION

PROPRIETARY AND CONFIDENTIAL
THE INFORMATION CONTAINED IN THIS DRAWING IS THE SOLE PROPERTY OF BENDPAK INC. ANY REPRODUCTION IN PART OR AS A WHOLE WITHOUT THE WRITTEN PERMISSION OF BENDPAK INC. IS PROHIBITED.

BendPak
1645 LEMONWOOD DR.
SANTA PAULA, CA 93060

TITLE: PL-12000DP PARTS BOX

SIZE	DWG. NO.	REV
A	5250339	E

SCALE: 1:30 SHEET 1 OF 2

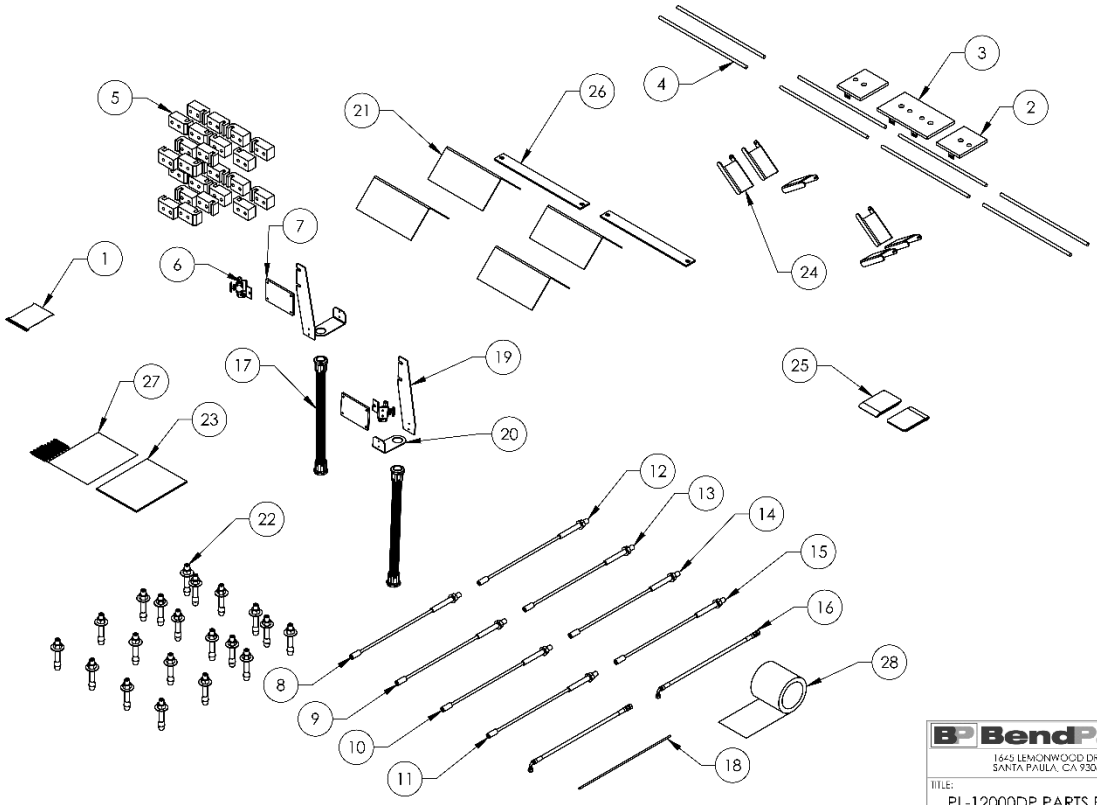

BendPak
1645 LEMONWOOD DR.
SANTA PAULA, CA 93060

TITLE: PL-12000DP PARTS BOX

SIZE	DWG. NO.	REV
A	5250339	E

SCALE: 1:18 SHEET 2 OF 2

ITEM NO	PART NUMBER	DESCRIPTION	QTY	REV
1	5535001	NUT M8 x 1.25 NL	8	-
2	5545340	WASHER M8 x24 FLAT	8	-
3	5530010	HHB M8 x 1.25 x 25mm ZPL	8	-
4	5550395	FTG TEE -04 COMP x -04 COMP x -04 COMP	10	-
5	5550089	FTG ELB -04 COMP x -06 NPT	4	-
6	5550106	FTG ELB -04JIC x 3/8" NPT	2	-
7	5550008	FTG ELB -04 JIC -06L ORB	2	-
8	5545009	WASHER, M4 x 9mm FLAT	4	-
9	5530008	SHCS M4 x 0.7 x 12 BOC	4	-
10	5535010	NUT M4 x 0.7, NL CL8	4	-
11	5545535	C WASHER SHIM FOR LIFTS	20	-
12	5580012	LIQUID PTFE THREAD SEALANT 50ml	1	-
13	5545341	WASHER M10 x Ø20 FLAT	12	
14	5530021	HHB M10 x 1.5 x 30mm ZPL	1	-
15	5535013	NUT M10 x 1.5 NL	6	-
16	5746381	HD-7/7500/ 9 SPACER, SAFETY LADDER, 17.5mm LG	6	B
17	5530167	HHB M10 x 1.5 x 45mm	4	-
18	5530767	HHB M10 x 1.5 x 70	1	-
19	5530756	HHB M6 x 1.0 x 25mm	16	-
20	5535357	NUT M6 x 1.0, NL CL8	16	-
21	5545347	WASHER M12 x 24mm FLAT, CL 8.8	20	-
22	5535012	NUT M12 x 1.75 NL	4	-
23	5530009	HHB M12 x 1.75 x 90 CL8.8	16	-
24	5545201	WASHER, M12 SPRING LOCK	16	-
25	5535354	NUT, M12 x1.75	16	-
26	5505031	ROTOR CLIP Ø12mm SS	16	-
27	5530375	HHB M12 x 1.75 x 25 CL12.9	4	-
28	5530438	HHB M20 x 2.5 x 150 PT, CL 8.8	6	-
29	5545343	WASHER, M20 FLAT	6	-
30	5535017	NUT M20 x 2.5 NL	6	-

DO NOT SCALE DRAWING		NAME	DATE	BendPak.
	DRAWN	TM	10/08/2021	1645 LEMONWOOD DR. SANTA PAULA, CA 93060
	CHECKED	OR	08/11/2022	
DIMENSIONS ARE IN MM	THIRD ANGLE PROJECTION			TITLE: PL-12000DP PARTS BAG
	PROPRIETARY AND CONFIDENTIAL THE INFORMATION CONTAINED IN THIS DRAWING IS THE SOLE PROPERTY OF BENDPAK INC. ANY REPRODUCTION IN PART OR AS A WHOLE WITHOUT THE WRITTEN PERMISSION OF BENDPAK INC. IS PROHIBITED.			SIZE A · DWG. NO. 5174102 · REV C
				SCALE: 1:60 · SHEET 1 OF 1

WHERE USED
PL-12000DP
PL-12000DPS

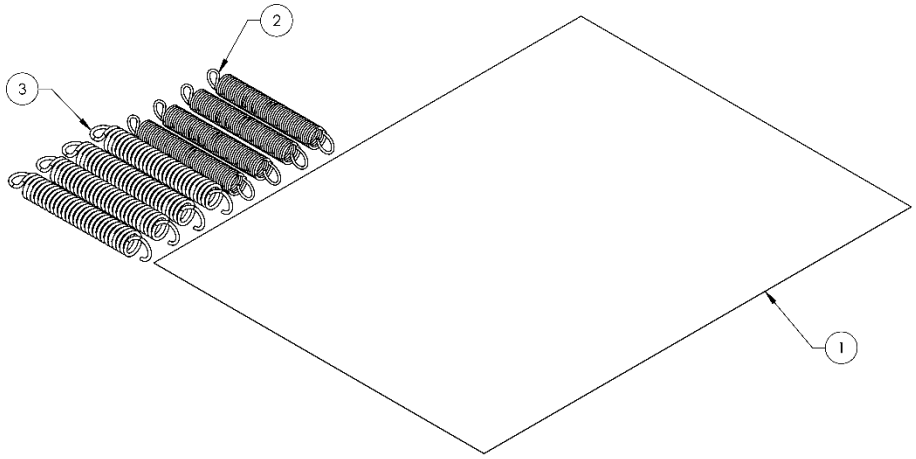

ITEM NO	PART NUMBER	DESCRIPTION	QTY	REV
1	5900247	SAFETY CE KIT INSTALLATION SHEET	1	-
2	5540070	SPRING Ø11mm x 84mm, AIR CYLINDER	4	C
3	5540065	SPRING Ø13mm x 90mm, SLACK SAFETY	4	A

DO NOT SCALE DRAWING		NAME	DATE	BendPak.
	DRAWN	TM	07/08/2020	1645 LEMONWOOD DR. SANTA PAULA, CA 93060
	CHECKED	OR	08/28/2020	
DIMENSIONS ARE IN MM	THIRD ANGLE PROJECTION			TITLE: 4 POST LIGHT DUTY CE PARTS BAG
	PROPRIETARY AND CONFIDENTIAL THE INFORMATION CONTAINED IN THIS DRAWING IS THE SOLE PROPERTY OF BENDPAK INC. ANY REPRODUCTION IN PART OR AS A WHOLE WITHOUT THE WRITTEN PERMISSION OF BENDPAK INC. IS PROHIBITED.			SIZE A · DWG. NO. 5210241 · REV A
				SCALE: 1:2 · SHEET 1 OF 1

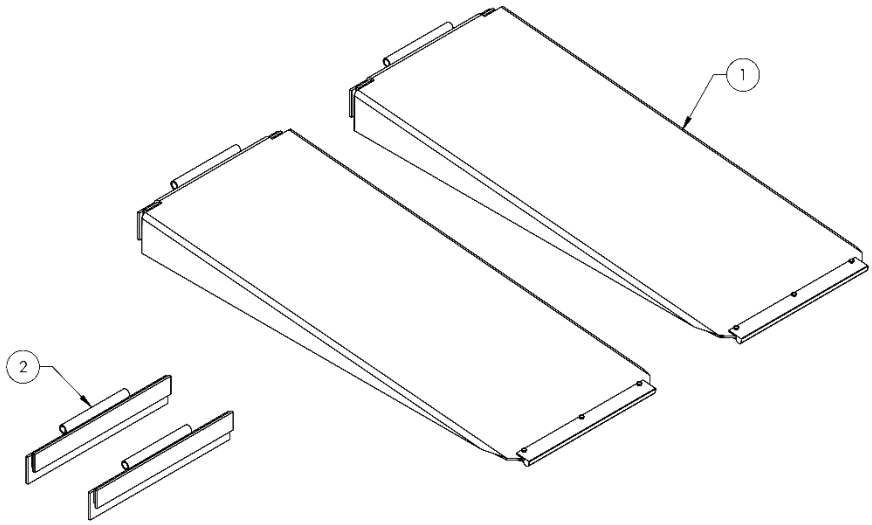

WHERE USED
HD-7 SERIES
HD-9
HD-9XL
HD-9XW
HD-9ST
HD 9STX
PL-12000DP SERIES

ITEM NO	PART NUMBER	DESCRIPTION	QTY	REV
1	5174700	HD-7/9 EXTENDED ALUMINUM APPROACH RAMP ASSEMBLY	2	C
2	5600722	HD-9 DRIVE UP TIE PLATE WELDMENT	2	A

DO NOT SCALE DRAWING

	NAME	DATE
DRAWN	TM	04/08/2013
CHECKED		

DIMENSIONS ARE IN MM

THIRD ANGLE PROJECTION

PROPRIETARY AND CONFIDENTIAL
THE INFORMATION CONTAINED IN THIS DRAWING IS THE SOLE PROPERTY OF BENDPAK INC. ANY REPRODUCTION IN PART OR AS A WHOLE WITHOUT THE WRITTEN PERMISSION OF BENDPAK INC. IS PROHIBITED.

BendPak.
1645 LEMONWOOD DR.
SANTA PAULA, CA 93060

TITLE: HD-7/9 EXTENDED ALUMINUM APPROACH RAMP KIT

SIZE	DWG. NO.	REV
A	5174705	D

SCALE: 1:10 SHEET 1 OF 1

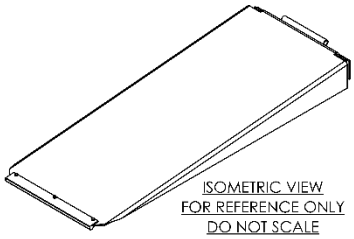

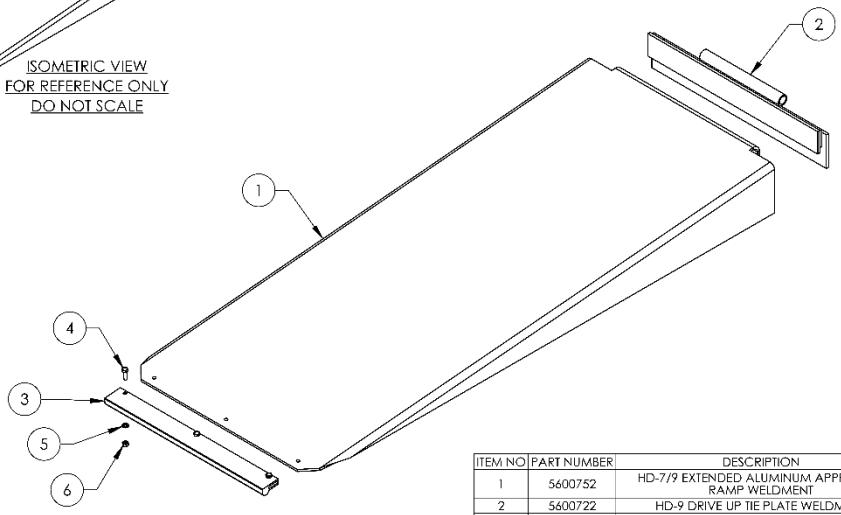

WHERE USED
HD-7 SERIES
HD-9
HD-9XL
HD-9XW
HD-9ST
HD-9STX
PL-12000DP SERIES

ITEM NO	PART NUMBER	DESCRIPTION	QTY	REV
1	5600752	HD-7/9 EXTENDED ALUMINUM APPROACH RAMP WELDMENT	1	C
2	5600722	HD-9 DRIVE UP TIE PLATE WELDMENT	1	A
3	5716054	APPROACH RAMP EDGE GUARD	1	A
4	5530093	HHB M6 x 1.0 x 20mm	3	-
5	5545005	WASHER, M6 x 12mm FLAT	3	-
6	5535357	NUT M6 x 1.0, NL CL8	3	-

DO NOT SCALE DRAWING

	NAME	DATE
DRAWN	TM	04/08/2013
CHECKED	OR	04/20/2020

DIMENSIONS ARE IN MM

THIRD ANGLE PROJECTION

PROPRIETARY AND CONFIDENTIAL
THE INFORMATION CONTAINED IN THIS DRAWING IS THE SOLE PROPERTY OF BENDPAK INC. ANY REPRODUCTION IN PART OR AS A WHOLE WITHOUT THE WRITTEN PERMISSION OF BENDPAK INC. IS PROHIBITED.

BendPak.
645 LEMONWOOD DR.
SANTA PAULA, CA 93060

TITLE: HD-7/9 EXTENDED ALUMINUM APPROACH RAMP ASSEMBLY

SIZE	DWG. NO.	REV
A	5174700	C

SCALE: 1:8 SHEET 1 OF 1

PL-12000DPS

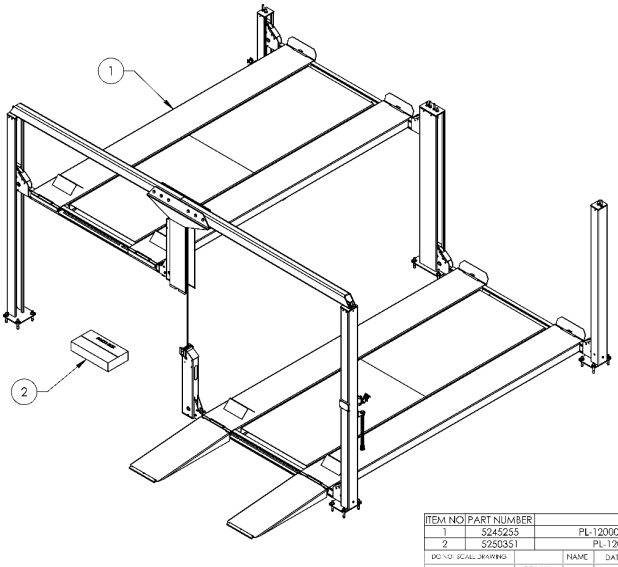

ITEM NO	PART NUMBER	DESCRIPTION	QTY	REV
1	5245255	PL-12000DPS SUPERSTRUCTURE	1	C
2	5250351	PL-12000DPS PARTS BOX	1	C

DO NOT SCALE DRAWING

	NAME	DATE
DRAWN	TM	07/13/2022
CHECKED		

THIRD ANGLE PROJECTION

DIMENSIONS ARE IN MM

PROPRIETARY AND CONFIDENTIAL
THE INFORMATION CONTAINED IN THIS DRAWING IS THE SOLE PROPERTY OF BENDPAK INC. ANY REPRODUCTION IN PART OR AS A WHOLE WITHOUT THE WRITTEN PERMISSION OF BENDPAK INC. IS PROHIBITED.

BP BendPak
1645 LENOXWOOD DR.
SANTA PAULA, CA 93060

TITLE: PL-12000DPS PRODUCTION LIFT VER A

SIZE A | DWG. NO. 5260688 | REV D

SCALE: 1:40 | SHEET 1 OF 5

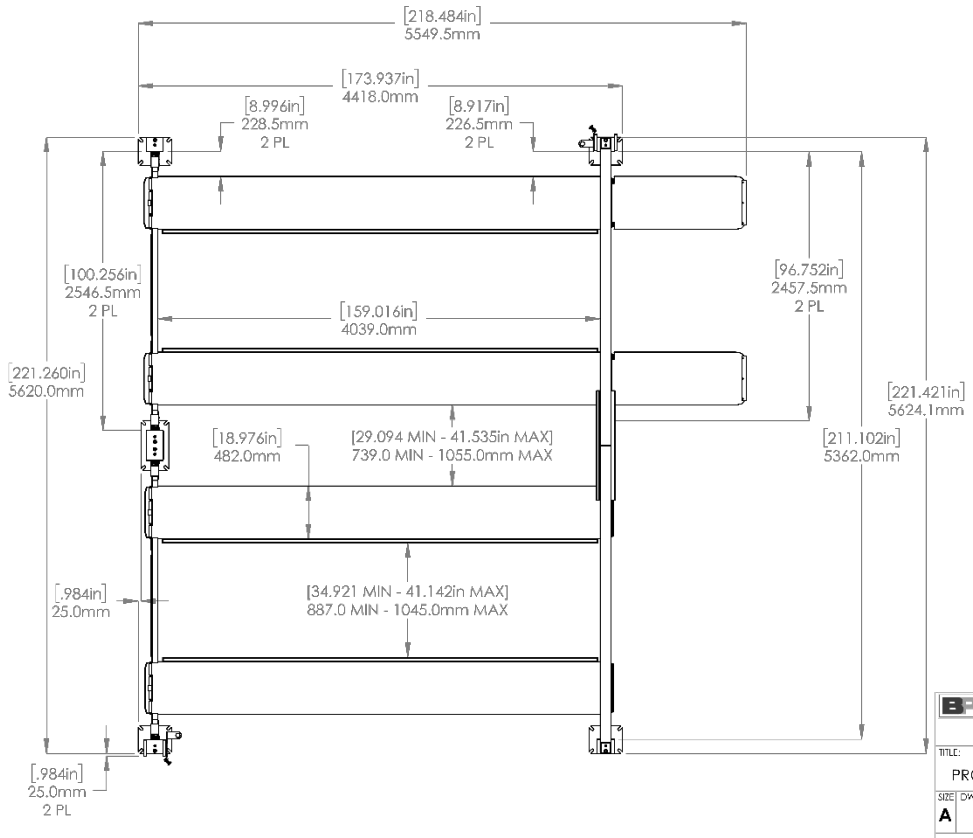

BP BendPak
1645 LENOXWOOD DR.
SANTA PAULA, CA 93060

TITLE: PL-12000DPS PRODUCTION LIFT VER A

SIZE A | DWG. NO. 5260688 | REV D

SCALE: 1:40 | SHEET 2 OF 5

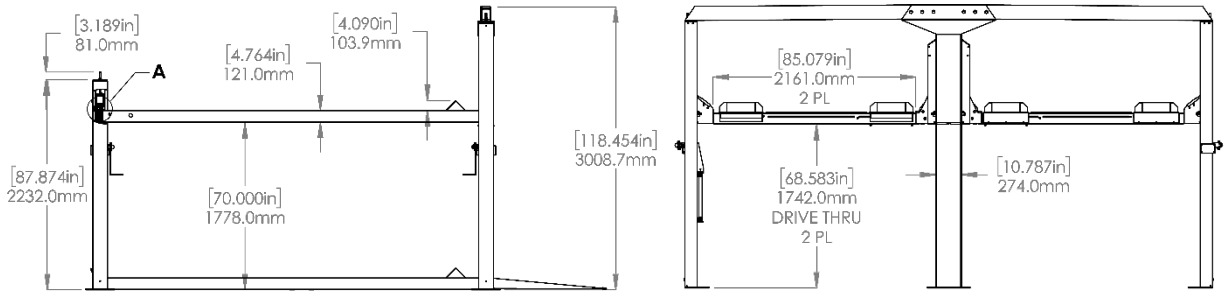

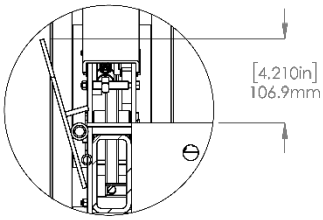

DETAIL A
SCALE 1 : 6

BendPak
1649 LEMONWOOD DR.
SANTA PAULA, CA 93060

TITLE: PL-12000DPS PRODUCTION LIFT VER A		
SIZE A	DWG. NO. 5260688	REV D
SCALE: 1:50		SHEET 3 OF 5

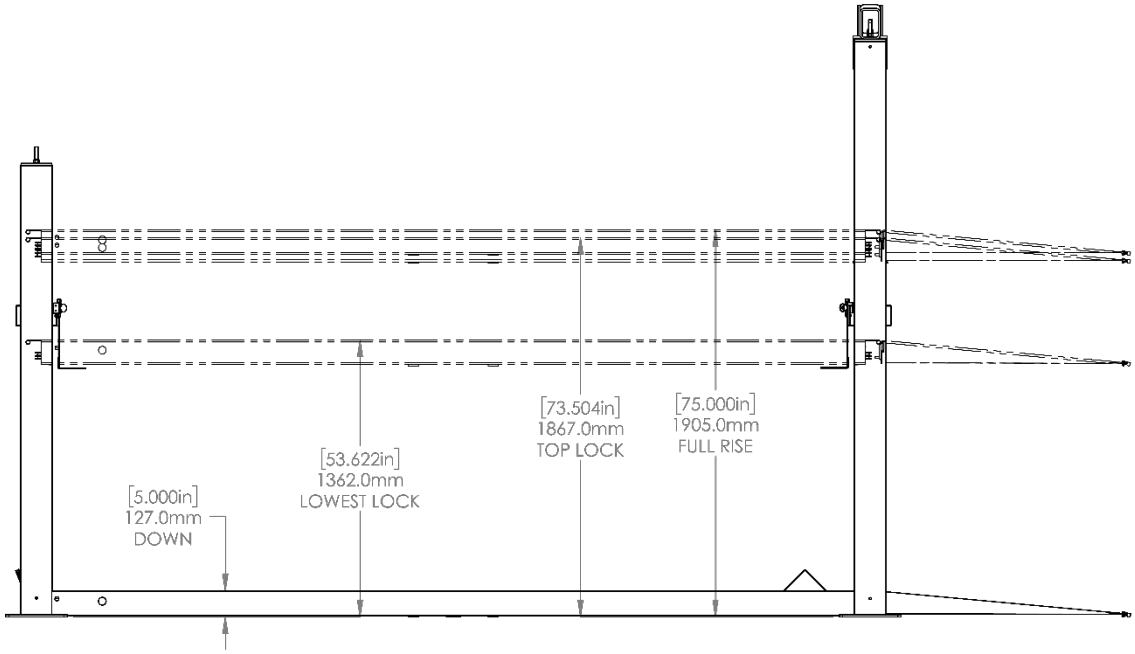

BendPak
1645 LEMONWOOD DR.
SANTA PAULA, CA 93060

TITLE: PL-12000DPS PRODUCTION LIFT VER A		
SIZE A	DWG. NO. 5260688	REV D
SCALE: 1:25		SHEET 4 OF 5

5174119 - PACKAGE 1				
ITEM NO.	PART NUMBER	DESCRIPTION	QTY.	REV
1	5216155	HD-7/9/973P, PL-12000 CROSSTUBE ASSEMBLY, SMALL WINDOW	1	A
2	5216156	HD-9/973P, PL-12000 CROSSTUBE ASSEMBLY, LARGE WINDOW	1	A
3	5216185	PL-12000DPS POWER SIDE RAMP ASSEMBLY	1	A
4	5600203	HD-9/7500BL, PL-12000DPS OFF SIDE RAMP WELDMENT	1	H
5	5601741	PL 12000DP TOP TUBE WELDMENT, RIGHT	1	C
6	5601769	PL-12000DP TOP TUBE WELDMENT, LEFT	1	B
7	5601858	PL-12000DPS DOUBLE POST WELDMENT, FULL	1	A
8	5601862	PL-12000DPS REAR SAFETY LADDER WELDMENT, TALL	2	A
9	5601738	PL-12000DP CENTER SAFETY LADDER WELDMENT, SHORT	2	B
10	5545025	WASHER, M16 x 30mm FLAT	8	-
11	5535008	NUT M16 x 2 NL	16	-
12	5600890	HD-7/7500/9, PL-12000 TIRE STOP PLATE WELDMENT	4	F
13	5174705	HD-7/9 EXTENDED ALUMINUM APPROACH RAMP KIT	1	D

5174120 - PACKAGE 2				
ITEM NO.	PART NUMBER	DESCRIPTION	QTY.	REV
1	5601136	HD-9/7500BL, PL-12000DPS POWER SIDE POST WELDMENT	1	A
2	5601860	PL-12000DPS POST WELDMENT, TALL	1	A
3	5601859	PL-12000DPS POWER POST WELDMENT, TALL	1	A
4	5601135	HD-9/7500BL PL-12000DPS OFF SIDE POST WELDMENT	1	A
5	5216082	PL-12000DP REAR CROSSTUBE ASSEMBLY, SMALL WINDOW	1	E
6	5216083	PL-12000DP REAR CROSSTUBE ASSEMBLY, LARGE WINDOW	1	E
7	5216185	PL-12000DPS POWER SIDE RAMP ASSEMBLY	1	A
8	5600203	HD 9/7500BL, PL 12000DPS OFF SIDE RAMP WELDMENT	1	H
9	5601861	PL-12000DPS SAFETY LADDER WELDMENT	4	A
10	5716118	PLASTIC RAMP COVER, 950mm	8	A
11	5716119	PLASTIC RAMP COVER, 1000mm	8	A
12	5250351	PL-12000DPS PARTS BOX	1	C

5174121 - PACKAGE 3				
ITEM NO.	PART NUMBER	DESCRIPTION	QTY.	REV
1	5601742	PL-12000DP SHORT POST WELDMENT	1	C
2	5210209	HD-7/9, PL-12000 WIDE ALUMINUM SOLID DECK KIT	2	D

BendPak.
1645 LEMONWOOD DR.
SANTA PAULA, CA 93060

TITLE: PL-12000DPS PRODUCTION LIFT VER A

SIZE	DWG. NO.	REV
A	5260688	D

SCALE: -- SHEET 5 OF 5

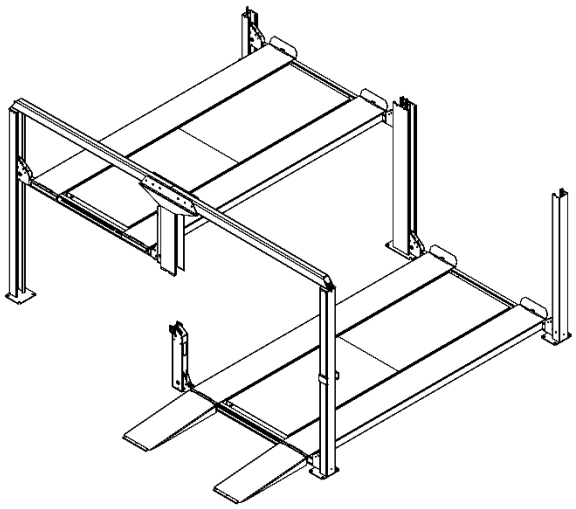

ITEM NO	PART NUMBER	DESCRIPTION	QTY	REV
1	5601136	HD-9/7500BL, PL-12000DPS POWER SIDE POST WELDMENT	1	A
2	5601860	PL-12000DPS POST WELDMENT, TALL	1	A
3	5601859	PL-12000DPS POWER POST WELDMENT, TALL	1	A
4	5601135	HD-9/7500BL PL-12000DPS OFF SIDE POST WELDMENT	1	A
5	5216155	HD-7/9/973P, PL-12000 CROSSTUBE ASSEMBLY, SMALL WINDOW	1	A
6	5216156	HD-9/973P, PL-12000 CROSSTUBE ASSEMBLY, LARGE WINDOW	1	A
7	5216082	PL-12000DP REAR CROSSTUBE ASSEMBLY, SMALL WINDOW	1	E
8	5216083	PL-12000DP REAR CROSSTUBE ASSEMBLY, LARGE WINDOW	1	E
9	5216185	PL-12000DPS POWER SIDE RAMP ASSEMBLY	2	A
10	5600203	HD 9/7500BL, PL 12000DPS OFF SIDE RAMP WELDMENT	2	H
11	5601741	PL-12000DP TOP TUBE WELDMENT, RIGHT	1	C
12	5601769	PL-12000DP TOP TUBE WELDMENT, LEFT	1	B
13	5601742	PL-12000DP SHORT POST WELDMENT	1	C
14	5601858	PL-12000DPS DOUBLE POST WELDMENT, FULL	1	A
15	5601862	PL-12000DPS REAR SAFETY LADDER WELDMENT, TALL	2	A
16	5601861	PL-12000DPS SAFETY LADDER WELDMENT	4	A
17	5601738	PL-12000DP CENTER SAFETY LADDER WELDMENT, SHORT	2	B
18	5545025	WASHER, M16 x 30mm FLAT	8	-
19	5535008	NUT M16 x 2 NL	16	-
20	5716118	PLASTIC RAMP COVER, 950mm	8	A
21	5716119	PLASTIC RAMP COVER, 1000mm	8	A
22	5210209	HD-7/9, PL-12000 WIDE ALUMINUM SOLID DECK KIT	2	D
23	5600890	HD-7/7500/9, PL-12000 TIRE STOP PLATE WELDMENT	4	F
24	5174705	HD-7/9 EXTENDED ALUMINUM APPROACH RAMP KIT	1	D

WHERE USED
PL-12000DPS

DO NOT SCALE DRAWING

	NAME	DATE
DRAWN	TM	07/13/2022
CHECKED		

DIMENSIONS ARE IN MM

THIRD ANGLE PROJECTION

PROPRIETARY AND CONFIDENTIAL
THE INFORMATION CONTAINED IN THIS DRAWING IS THE SOLE PROPERTY OF BENDPAK INC. ANY REPRODUCTION IN PART OR AS A WHOLE WITHOUT THE WRITTEN PERMISSION OF BENDPAK INC. IS PROHIBITED.

BendPak.
1645 LEMONWOOD DR.
SANTA PAULA, CA 93060

TITLE: PL-12000DPS SUPERSTRUCTURE

SIZE	DWG. NO.	REV
A	5245255	C

SCALE: 1:55 SHEET 1 OF 2

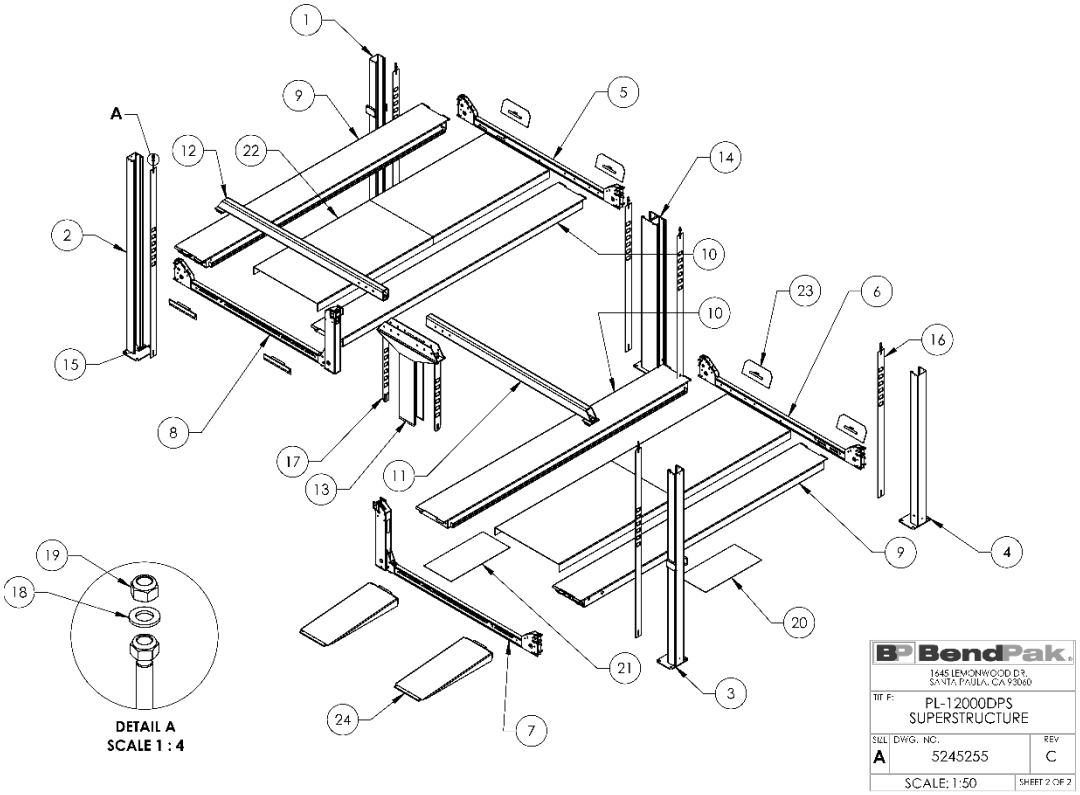

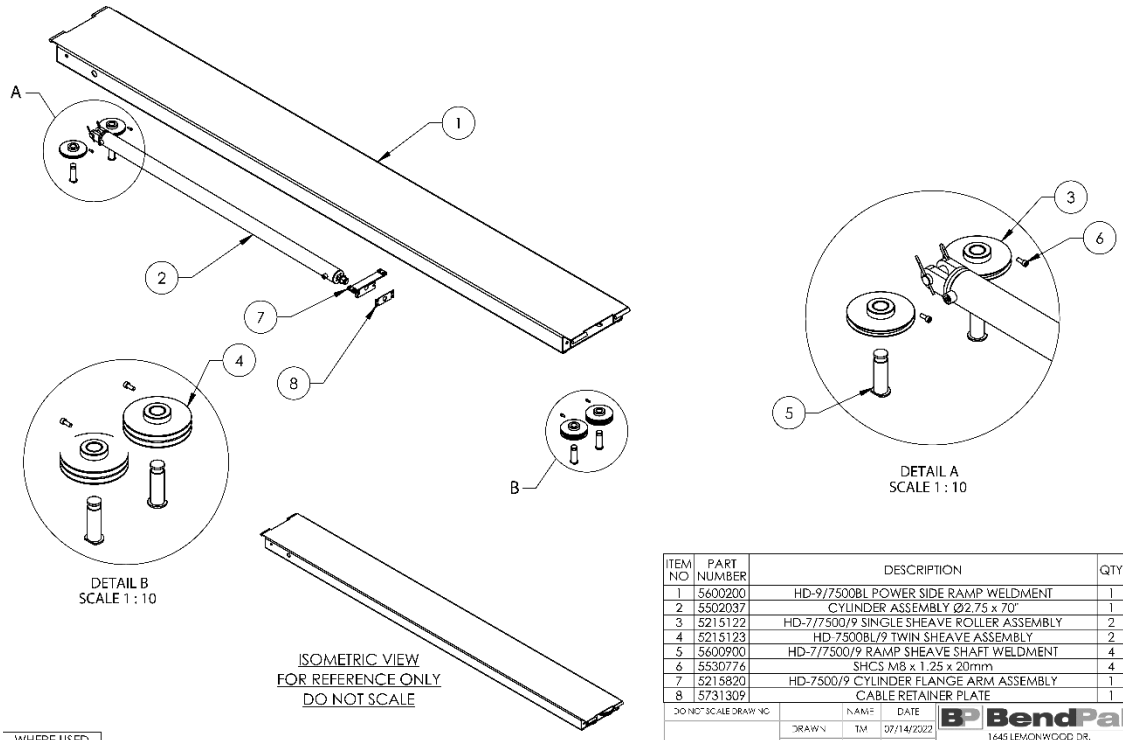

ITEM NO	PART NUMBER	DESCRIPTION	QTY	REV
1	5600200	HD-9/7500BL POWER SIDE RAMP WELDMENT	1	G
2	5502037	CYLINDER ASSEMBLY Ø2.75 x 70"	1	D
3	5215122	HD-7/7500/9 SINGLE SHEAVE ROLLER ASSEMBLY	2	E
4	5215123	HD-7500BL/9 TWIN SHEAVE ASSEMBLY	2	E
5	5600900	HD-7/7500/9 RAMP SHEAVE SHAFT WELDMENT	4	E
6	5530776	SHCS M8 x 1.25 x 20mm	4	-
7	5215820	HD-7500/9 CYLINDER FLANGE ARM ASSEMBLY	1	B
8	5731309	CABLE RETAINER PLATE	1	A

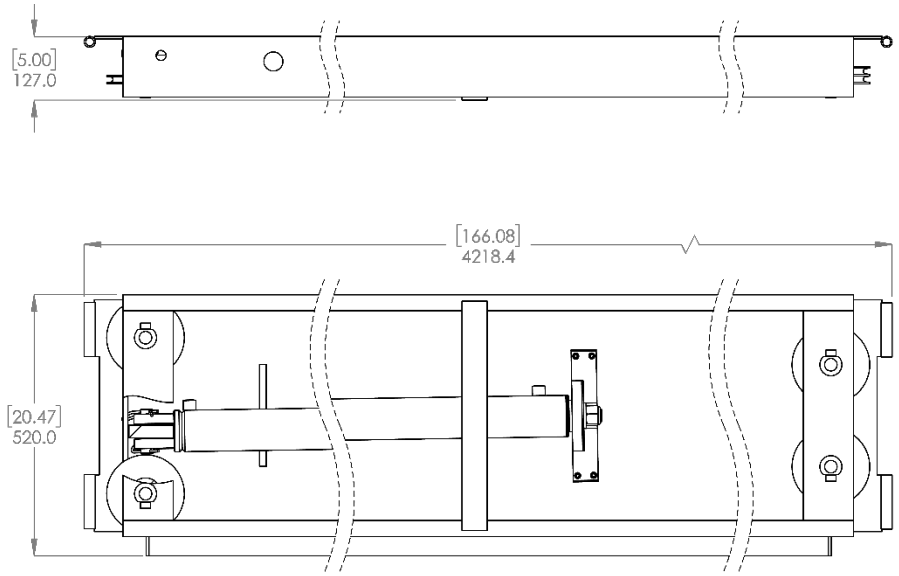

BendPak. 1645 LEMONWOOD DR. SANTA PAULA, CA 93060		
TITLE: PL-12000DPS POWER SIDE RAMP ASSEMBLY		
SIZE A	DWG. NO. 5216185	REV A
SCALE: 1:10		SHEET 2 OF 2

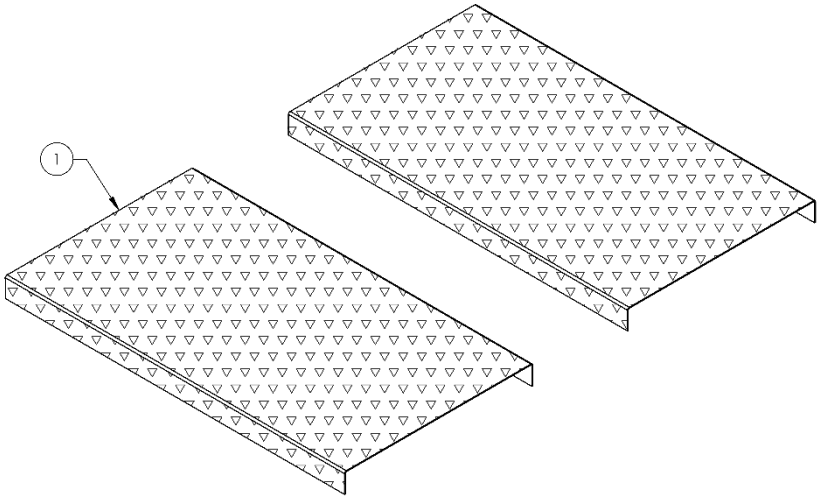

WHERE USED
HD-7W
HD-9
HD-9SW
HD-9SW-E
PL-12000DPS

ITEM NO	PART NUMBER	DESCRIPTION	QTY	REV
1	5600713	HD-7/9 WIDE ALUMINUM SOLID DECK WELDMENT	2	C

DO NOT SCALE DRAWING		NAME	DATE	BendPak. 645 LEMONWOOD DR. SANTA PAULA, CA 93060
DIMENSIONS ARE IN MM	DRAWN	TM	08/08/2011	
	CHECKED	OR	04/20/2020	
	THIRD ANGLE PROJECTION			TITLE: HD-7/9, PL-12000 WIDE ALUMINUM SOLID DECK KIT
	PROPRIETARY AND CONFIDENTIAL THE INFORMATION CONTAINED IN THIS DRAWING IS THE SOLE PROPERTY OF BENDPAK INC. ANY REPRODUCTION IN PART OR AS A WHOLE WITHOUT THE WRITTEN PERMISSION OF BENDPAK INC IS PROHIBITED.			SIZE A / DWG. NO. 5210209 / REV D
				SCALE: 1:18 / SHEET 1 OF 1

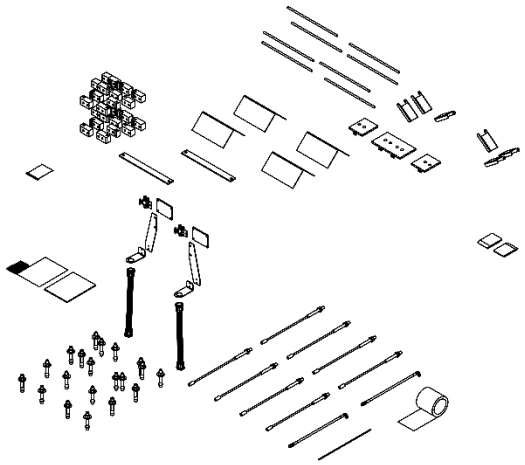

ITEM NO	PART NUMBER	DESCRIPTION	QTY	REV
1	5174102	PL-12000DP PARTS BAG	1	C
2	5600405	HD-7/9/7500, PL-12000 TOP PLATE WELDMENT	2	C
3	5601732	PL-12000DP DOUBLE TOP PLATE WELDMENT, CENTER/FRONT	1	B
4	5745014	HD-7/7500/9, PL-12000 DRIVE UP RAMP PIN	8	B
5	5716005	CROSSTUBE POLYETHYLENE SLIDE BLOCK	24	M
6	5215096	PUSH BUTTON AIR ASSEMBLY	2	G
7	5715003	POWER UNIT VIBRATION DAMPENER	2	B
8	5595748	CABLE ASSEMBLY Ø10 x 2990mm ST	1	A
9	5595751	CABLE ASSEMBLY Ø10 x 4610mm ST	1	B
10	5595624	CABLE ASSEMBLY Ø10 x 7123mm ST	1	B
11	5595736	CABLE ASSEMBLY Ø10 x 8722mm ST	1	B
12	5595741	CABLE ASSEMBLY Ø10 x 2368mm ST	1	B
13	5595739	CABLE ASSEMBLY Ø10 x 3977mm ST	1	C
14	5595737	CABLE ASSEMBLY Ø10 x 7750mm ST	1	C
15	5595735	CABLE ASSEMBLY Ø10 x 9262mm ST	1	C
16	5570036	HD 9STX/9XW HYD. HOSE ASSY Ø6.4 x 3683mm	2	E
17	5216139	FLEX TUBE KIT, UP TO 2000mm	2	A
18	5570795	1/4" POLY-FLO TUBING	30500mm*	-
19	5700029	HD-SERIES FLEX TUBE BRACKET PLATE	2	F
20	5700033	HD/HDS FLEX TUBE ANGLE	2	E
21	5700072	WHEEL CHOCK	4	B
22	5530456	AB 3/4" x 4 - 3/4"	20	-
23	5900033	HD-9SW/SWX INSTALLATION MANUAL	1	-
24	5716630	HD-7/7500/9 CROSSTUBE COVER, PLASTIC	6	A
25	5716080	PL-12000DP REAR CROSSTUBE END TOP COVER, PLASTIC	2	A
26	5735663	HD-9 RAMP STRAP, BOLT ON	2	B
27	5210241	4 POST LIGHT DUTY CE PARTS BAG	1	A
28	5930195	ANTI-SLIP TAPE, 6" x 24ft	1	-

WHERE USED
PL-12000DPS

DO NOT SCALE DRAWING

	NAME	DATE
DRAWN	TM	07/13/2022
CHECKED		

DIMENSIONS ARE IN MM

THIRD ANGLE PROJECTION

PROPRIETARY AND CONFIDENTIAL
THE INFORMATION CONTAINED IN THIS DRAWING IS THE SOLE PROPERTY OF BENDPAK INC. ANY REPRODUCTION IN PART OR AS A WHOLE WITHOUT THE WRITTEN PERMISSION OF BENDPAK INC. IS PROHIBITED.

BendPak.
1645 LEMONWOOD DR.
SANTA PAULA, CA 93060

TITLE: PL-12000DPS PARTS BOX

SIZE	DWG. NO.	REV
A	5250351	C

SCALE: 1:30 SHEET 1 OF 2

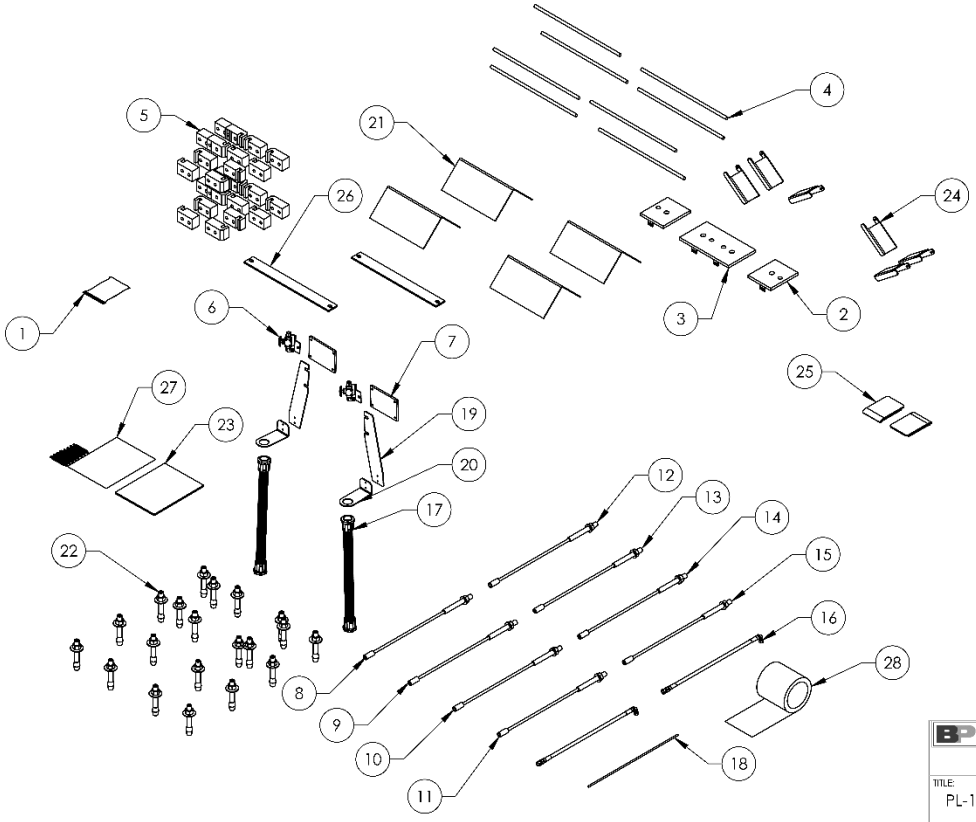

BendPak.
1645 LEMONWOOD DR.
SANTA PAULA, CA 93060

TITLE: PL-12000DPS PARTS BOX

SIZE	DWG. NO.	REV
A	5250351	C

SCALE: 1:18 SHEET 2 OF 2

ITEM NO	PART NUMBER	DESCRIPTION	QTY	REV
1	5535001	NUT M8 x 1.25 NL	8	-
2	5545340	WASHER M8 x24 FLAT	8	-
3	5530010	HHB M8 x 1.25 x 25mm ZPL	8	-
4	5550395	FTG TEE -04 COMP x -04 COMP x -04 COMP	10	-
5	5550089	FTG ELB -04 COMP x -06 NPT	4	-
6	5550106	FTG ELB -04JIC x 3/8" NPT	2	-
7	5550008	FTG ELB -04 JIC -06L ORB	2	-
8	5545009	WASHER, M4 x 9mm FLAT	4	-
9	5530008	SHCS M4 x 0.7 x 12 BOC	4	-
10	5535010	NUT M4 x 0.7, NL CL8	4	-
11	5545535	C WASHER SHIM FOR LIFTS	20	-
12	5580012	LIQUID PTFE THREAD SEALANT 50ml	1	-
13	5545341	WASHER M10 x Ø20 FLAT	12	-
14	5530021	HHB M10 x 1.5 x 30mm ZPL	1	-
15	5535013	NUT M10 x 1.5 NL	6	-
16	5746381	HD-7/7500/ 9 SPACER, SAFETY LADDER, 17.5mm LG	6	B
17	5530167	HHB M10 x 1.5 x 45mm	4	-
18	5530767	HHB M10 x 1.5 x 70	1	-
19	5530756	HHB M6 x 1.0 x 25mm	16	-
20	5535357	NUT M6 x 1.0, NL CL8	16	-
21	5545347	WASHER M12 x 24mm FLAT, CL 8.8	20	-
22	5535012	NUT M12 x 1.75 NL	4	-
23	5530009	HHB M12 x 1.75 x 90 CL8.8	16	-
24	5545201	WASHER, M12 SPRING LOCK	16	-
25	5535354	NUT, M12 x1.75	16	-
26	5505031	ROTOR CLIP Ø12mm SS	16	-
27	5530375	HHB M12 x 1.75 x 25 CL12.9	4	-
28	5530438	HHB M20 x 2.5 x 150 PT, CL 8.8	6	-
29	5545343	WASHER, M20 FLAT	6	-
30	5535017	NUT M20 x 2.5 NL	6	-

WHERE USED
PL-12000DP
PL-12000DPS

DO NOT SCALE DRAWING

DIMENSIONS ARE IN MM

	NAME	DATE
DRAWN	TM	10/08/2021
CHECKED	OR	08/1 /2022

THIRD ANGLE PROJECTION

PROPRIETARY AND CONFIDENTIAL
THE INFORMATION CONTAINED IN THIS DRAWING IS THE SOLE PROPERTY OF **BENDPAK INC.** ANY REPRODUCTION IN PART OR AS A WHOLE WITHOUT THE WRITTEN PERMISSION OF **BENDPAK INC.** IS PROHIBITED.

BendPak
1645 LEMONWOOD DR.
SANTA PAULA, CA 93060

TITLE: PL-12000DP PARTS BAG

SIZE	DWG. NO.	REV
A	5174102	C

SCALE: 1:60 SHEET 1 OF 1

Maintenance Log

Maintenance Log

Automotive Lift Institute (ALI) Store

You probably checked the **ALI's Directory of Certified Lifts** (www.autolift.org/ali-directory-of-certified-lifts/) before making your most recent Lift purchase, but did you know the **ALI Store** (www.autolift.org/ali-store/) offers a wide variety of professional, easy-to-use, and reasonably priced training and safety materials that will make your garage a safer place to work?

The ALI Store is your trusted source for workplace safety!

Visit today and get the training and materials needed to work safely: www.autolift.org/ali-store/.

Lifting It Right Online Certificate Course. Make *sure* you and your people are lifting vehicles the right way.

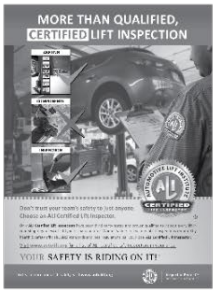

ALI Lift Inspector Certification Program Registration. Become a ALI Certified Lift Inspector.

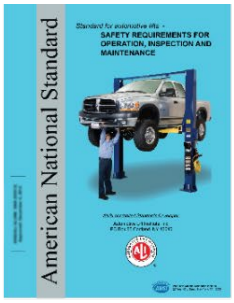

ANSI/ALI ALOIM Standard for Automotive Lifts. Safety Requirements for Operation, Inspection, and Maintenance.

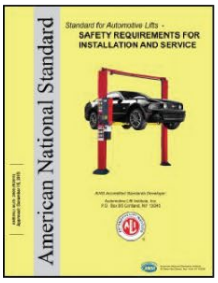

ANSI/ALI ALIS Standard. Safety Requirements for Installation and Service.

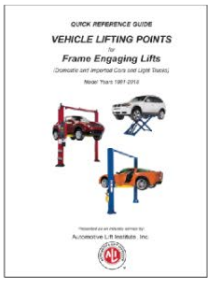

Guide to Identifying Vehicle Lifting Points for Frame-Engaging Lifts. Don't eyeball your lifting points, ***know*** where they are.

Lift Operator Safety Materials. Five safety documents in a single package.

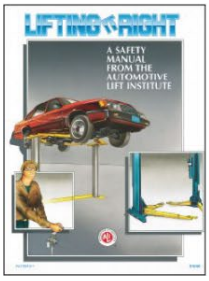

Lifting It Right. A hardcopy version of the *Lifting It Right* safety manual from the Automotive Lift Institute.

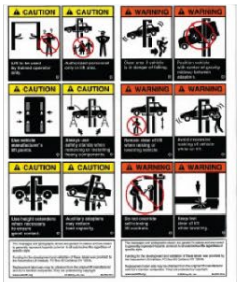

Uniform Warning Labels and Placards for 2-Posts. Labels in Mandarin, French Canadian, and Spanish are also available.

Safety Tips Card. Reminds your people of 13 key safety tips to follow daily.

1645 Lemonwood Drive
Santa Paula, CA, 93060 USA

© 2023 BendPak Inc. All rights reserved.

bendpak.com