# EASYPRESS®

## Electronic pressure regulators

Domestic use

### PERFORMANCE RANGE

- Max flow rate: **52.8 US g.p.m** (12 m³/h)
- Working pressure: **145 psi**
- Restarting pressure: **21.7 psi** 🔵

### APPLICATION LIMITS

- Maximum liquid temperature **149 °F**
- Ambient temperature up to **104 °F**
- Burst pressure > **580 bar**
- Protection: **IP 65**
- Voltage: **230V** - Frequency: **50/60 Hz**
- Max current: **16 A**

### CONSTRUCTION AND SAFETY STANDARDS

- Resinated and easily replaced electronic card for complete protection from humidity, fitted in the case with an IP 65 protection.
- The electronic card inside EASYPRESS has undergone the strictest EMC tests of electromagnetic compatibility.

### INSTALLATION AND USE

The EASYPRESS series consists of electronic devices designed to start (when a tap is turned on) and stop (when a tap is turned off) single-phase pumps.
A **microprocessor protects** the pump from dry running, and allows the pump to be restarted either automatically or manually. It also prevents the pump from starting too often when small leaks are present within an installation.

### PATENTS - TRADE MARKS - MODELS

- Registered EU Design n. 868062
- Patent n. IT 1388969, IT 1388970
- EASYPRESS® registered Trade Mark n. 0001334481

### OPTIONS AVAILABLE ON REQUEST

- EASYPRESS version with restarting pressure **11.6 psi** 🟡
- EASYPRESS version with restarting pressure **31.9 psi** 🔴
- Version with cable and Schuko plug and socket
- Version with pressure gauge

### GUARANTEE

2 years subject to terms and conditions

### STARTING PRESSURE

There are three different models available, each with a different starting pressure and easily identified by the coloured cap positioned at the rear of the EASYPRESS, for installations requiring delivery at various heights.

**Maximum delivery height**

21.7 psi version 🔵 **= 36 feet**

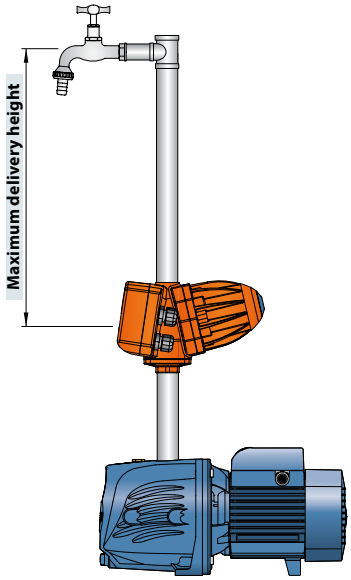

## PRESSURE LOSSES

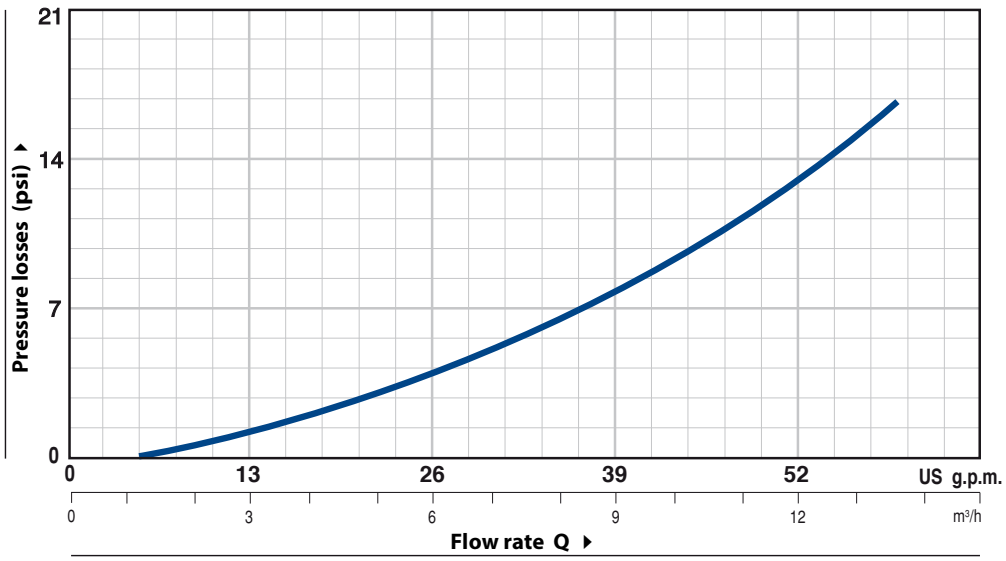


| MODEL | POWER (P2) kW | Volt | Hz | Fittings | Flow rate | Restarting pressure |
|---|---|---|---|---|---|---|
| **EASYPRESS** | 1.5 | 230 | 50/60 | 1″ x 1″ | 52 US g.p.m. | 21.7 psi (1.5 bar) |

## DIMENSIONS AND WEIGHT

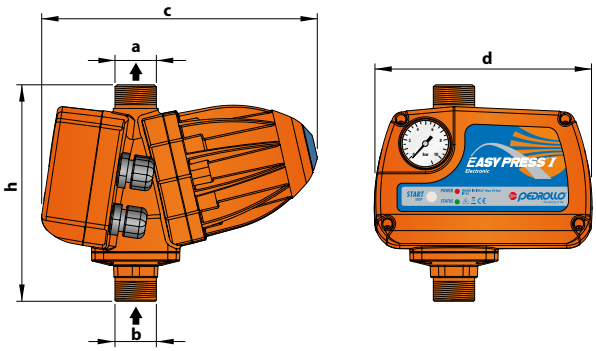


| MODEL | PORTS | | DIMENSIONS inches | | | lb |
|---|---|---|---|---|---|---|
| Single-phase | a | b | c | d | h | |
| **EASYPRESS** | **1″** | **1″** | 8.7 | 6.9 | 6.9 | **3.6** |