1500 PSI Pressure Washer

Owner's Manual



⚠WARNING: Read carefully and understand all ASSEMBLY AND OPERATION INSTRUCTIONS before operating. Failure to follow the safety rules and other basic safety precautions may result in serious personal injury.

Items #60727

READ &SAVE THESE INSTRUCTIONS

Thank you very much for choosing an Ironton® product!

For future reference, please complete the owner's record below:

Serial Number/Lot Date Code: _____

Purchase Date: _____

Save the receipt, warranty, and this manual. It is important that you read the entire manual to become familiar with this product before you begin using it.

This pressure washer is designed for certain applications only. Northern Tool and Equipment is not responsible for issues arising from modification or improper use of this product such as an application for which it was not designed. We strongly recommend that this product not be modified and/or used for any application other than that for which it was designed.

For technical questions, please call **1-877-234-6869**.

Table of Contents

Intended Use **4**
Technical Specifications **4**
Important Safety Information **4**
Specific Operation Warnings **5**
Main Parts of Pressure Washer **6**
Assembly Instructions **6**
Before Each Use **7**
Operating Instructions **12**
After Each Use **18**
Maintenance **19**
Troubleshooting **22**
Parts Diagram of Pressure Washer **22**
Parts List of Pressure Washer **23**
Parts Diagram of Pump **24**
Parts List of Pump **25**
Parts Diagram of Engine **26**
Parts List of Engine **27**
Replacement Parts **28**
Limited Warranty **29**

Intended Use

The Ironton 1500 PSI Pressure Washer is designed for long life, dependability, and top performance. It produces a high-pressure water spray and incorporates cleaning chemicals into a low-pressure water spray. The pressure washer is powered by a gasoline engine.

Technical Specifications

Property	Specification
Engine	Ironton 79cc
Maximum Pressure	1500 PSI
Maximum Flow	1.5 GPM
Max Water Temp	140° F
Overall Dimensions	.25” ×20’
Dry Weight	41.89 lb.

Important Safety Information

⚠WARNING

- Read and understand all instructions. Failure to follow all instructions may result in serious injury or property damage.
- The warnings, cautions, and instructions in this manual cannot cover all possible conditions or situations that could occur. Exercise common sense and caution when using this tool. Always be aware of the environment and ensure that the tool is used in a safe and responsible manner.
- Do not allow persons to operate or assemble the product until they have read this manual and have developed a thorough understanding of how it works.
- Do not modify this product in any way. Unauthorized modification may impair the function and/or safety and could affect the life of the product. There are specific applications for which the product was designed.
- Use the right tool for the job. DO NOT attempt to force small equipment to do the work of larger industrial equipment. There are certain applications for which this equipment was designed. This product will be safer and do a better job at the capacity for which it was intended. DO NOT use this equipment for a purpose for which it was not intended.
- Industrial or commercial applications must follow OSHA requirements.

⚠WARNING

- Do not use the product where there is a risk of causing a fire or an explosion; e.g., in the presence of flammable liquids, gases, or dust. The product can create sparks, which may ignite the flammable liquids, gases, or dust.
- Keep children and bystanders away from the work area while operating the tool. Do not allow children to handle the product.

⚠CAUTION

PRESSURE WASHER USE AND CARE

- Do not force the pressure washer. Products are safer and do a better job when used in the manner for which they are designed. Plan your work, and use the correct product for the job.
- Check for damaged parts before each use. Carefully check that the product will operate properly and perform its intended function. Replace damaged or worn parts immediately. Never operate the product with a damaged part.
- Store the pressure washer when it is not in use. Store it in a dry, secure place out of the reach of children. Inspect the tool for good working condition prior to storage and before re-use.
- Use only accessories that are recommended by the manufacturer for use with your product. Accessories that may be suitable for one product may create a risk of injury when used with another tool. Never use an accessory that has a lower operating speed or operating pressure than the tool itself.
- Keep guards in place and in working order. Never operate the product without the guards in place.
- Do not leave the tool running unattended.

Specific Operation Warnings

⚠WARNING

- CO Poisoning: Exhaust from engine contains carbon monoxide, a poisonous gas that can cause carbon monoxide poisoning and possible death if inhaled. ONLY run pressure washer OUTDOORS and at least 20 feet from the home, away from windows, vents and air intakes, to allow proper ventilation. If you start to feel sick, dizzy, or weak while using the pressure washer, shut off the engine and get to fresh air RIGHT AWAY.
- Injection Injury: High-pressure spray can pierce skin and underlying tissues, leading to serious injury and possible amputation. Such an injection injury can result in blood poisoning and/or severe tissue damage.
- Flying Debris: High-pressure spray can cause flying debris and possible surface damage.
- Electric shock: Operating equipment in wet conditions or near water can cause electric shock.
- Chemical Exposure: Cleaning chemical vapors or contact with skin may be hazardous.
- Fire/Explosion: Engine sparking can ignite fuel or other flammable liquids or vapors in the vicinity. Hot exhaust from engine can ignite combustible materials.
- Burns: Pressure Washer pump and engine are hot surfaces that can cause burn injuries.

Main Parts of Pressure Washer

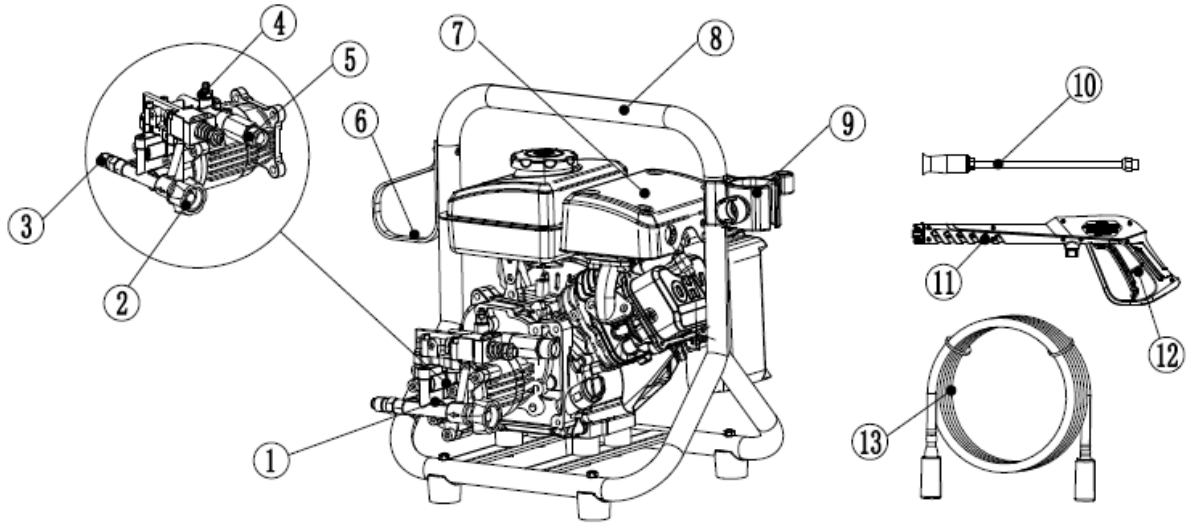

Reference	Subassembly
1	Pressure Washer Pump
2	Pump (Water) Inlet
3	Thermal Protector
4	Chemical Injector
5	Pump (Water) Outlet
6	Hose Ribbon
7	Engine
8	Handle
9	Upper Gun Holder
10	Spray Lance
11	Spray Gun
12	Trigger
13	Hose

Assembly Instructions

⚠WARNING

High-pressure fluid discharge from leaks (even pin-sized) or ruptured components can pierce skin and inject fluid into the body. Injection injury can result in blood poisoning and/or severe tissue damage leading to infection, gangrene, and possibly amputation.

- Never use a finger or skin to check for leaks.
- Never operate machine with damaged or missing hoses/parts.
- Never attempt to repair a high-pressure hose or component – Always replace it with a part that is rated at or above the pressure rating of this machine.

The pressures washer is heavy. It can crush and cause serious injury if it rolls out of control or tips over. Follow the instructions below for safely moving the pressure washer.

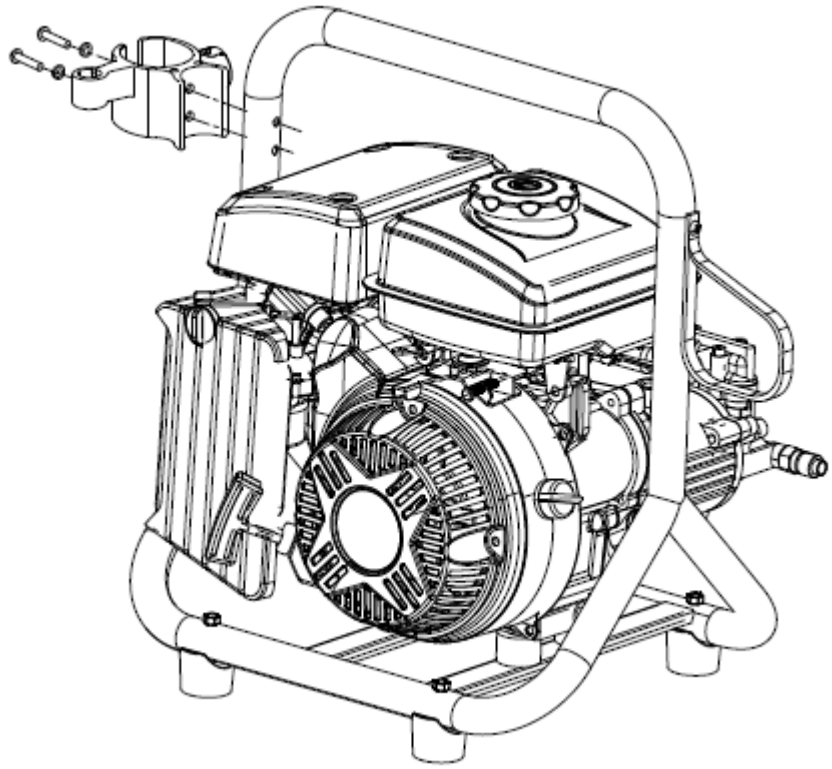

Tools Required for Assembly

- Open-end wrenches:S10 and S8
- Bolts:M6
- Flat Gasket: Φ6.6

Installation Steps

1. Ensure the upper gun holder hole fits the base of the mounting holes.
2. Insert the bolt and flat gasket in the holder by hand.

Tighten the nut with an S10 open-end wrench and then tighten the bolt with an S8 open-end wrench.

Before Each Use

Step 1. Inspect & Unpack

Upon receiving the pressure washer check for missing or damaged parts.

See the Main Parts of Water Pump section of this manual for a diagram of the pressure washer and its components.

● For missing components, contact Product Support at 1-877-234-6869.

● For damaged components, contact the freight company that delivered the unit and file a claim.

● If complete, fill out the product serial number information. See the warranty section in the back of this this manual.

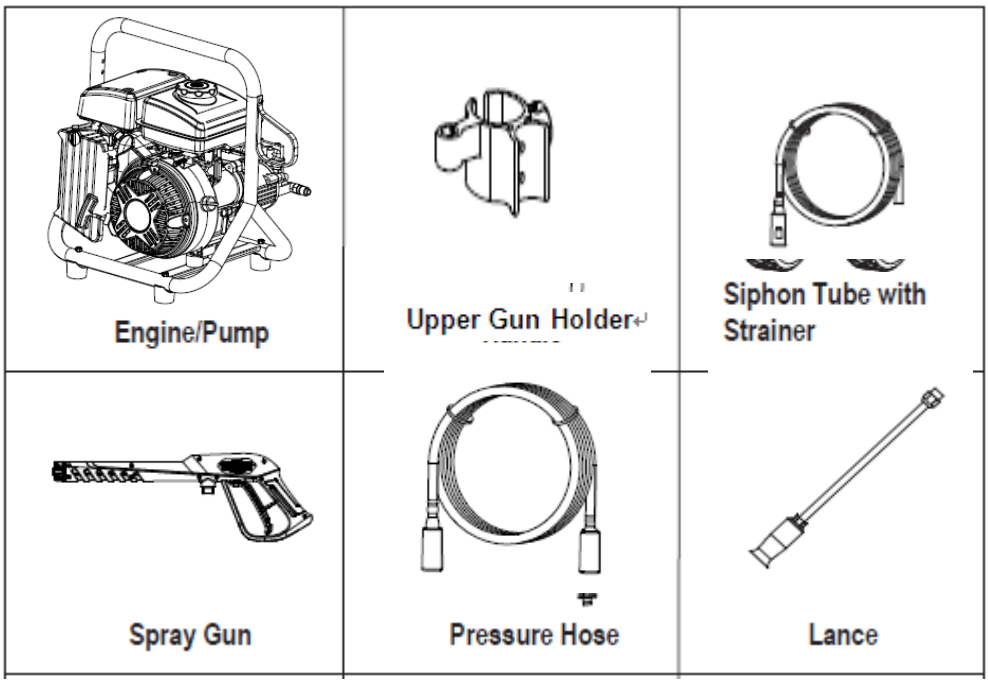

Step 2. Select Suitable Location

Moving and Handling

● Use the handles to manually move the pressure washer.

● Push the pressure washer in front of you as you walk.

● To turn, push down slightly on the handles and pivot the pressure washer on its wheels.

Elevating or Lowering the Pressure Washer

● To reduce risk of injury, it is recommended that two adults lift the pressure washer.

● Only lift the pressure washer by the bumper and handle. Do not use the pump or engine as a lifting point.

Outdoor Use Only

1. Never run the pressure washer in an enclosed or partially enclosed location such as a building, garage, barn, shed, or house. These spaces can trap poisonous gasses. Running a fan or opening windows will not provide adequate ventilation to prevent dangerous CO build-up.

2. Only use the pressure washer outdoors and far away from open windows, doors, and building or vehicle vents.

3. Place the pressure washer so that the exhaust fumes will not be directed towards people or building air intakes.

4. Do not locate and use the pressure washer in the presence of flammable vapors, dust, gases, or other potentially combustible materials.

5. Note that this pressure washer is NOT designed or approved for use in vehicles or marine applications. Never run the pressure washer inside RVs or other vehicles, on boats, or on pick-up truck beds.

Positioning

1. The pressure washer should be positioned on a firm, level (less than 3 degree slope), heat-resistant surface with good drainage and a nearby water supply.

2. The pressure washer should be placed within garden hose distance of a continuous water supply. Ensure that the pressure washer sits level and will not slide or shift during operation. If applicable, block the pressure washer's wheels to prevent movement.

3. Situate so there is adequate pulling room for starting the engine using the recoil starter. Attempting to pull at an odd angle could rip off grip cord and/or cause muscular injuries to the operator.

Airflow

1. Situate so there is adequate clearance around pressure washer to allow for airflow – at least 7 feet from any non-combustible wall or obstruction.

2. Do not operate with a tarp, blanket, or cover surrounding the machine.

3. Do not place any objects against or on top of the unit.

4. The pressure washer needs adequate, unobstructed flow of air to allow for proper combustion and adequate cooling. Proper combustion can only be obtained when there is a sufficient supply of oxygen available for the amount of fuel being burned. Cooling ventilation is required to prevent overheating of the pressure washer and possible fire.

Exhaust

⚠WARNING

Carbon Monoxide Hazard

Exhaust fumes from the engine contain carbon monoxide (CO), a poisonous gas you cannot see, smell, or taste. The CO generated by the engine can rapidly accumulate, even in areas that appear to be well ventilated, resulting in dangerous and fatal concentrations within minutes. NEVER run pressure washer inside any enclosed or semi-enclosed spaces, including homes, garages, basements, sheds, boxes, pick-up truck beds, RVs, or boats. These spaces can trap poisonous gases, EVEN if you run a fan or open windows. If you start to feel sick, dizzy, or weak while using the pressure washer, shut off the engine and get to fresh air RIGHT AWAY. See a doctor. You may have carbon monoxide poisoning.

Exhaust Modification Hazard

Never attempt to attach ductwork to the muffler system to allow for installation inside an enclosure. This could cause heat build-up and increased exhaust backpressure, resulting in possible exhaust leakage or damage to the pressure washer.

1. The exhaust gas from your pressure washer is extremely hot and can cause combustible materials to catch on fire.

2. Make sure the engine is at least 7 feet from all combustible materials and buildings/structures during operation.

3. Keep a fire extinguisher rated "ABC" nearby. Keep it properly charged and be familiar with its use.

4. Place the unit so that the exhaust fumes will not be directed towards people or building air intakes.

Step 3. Check/Add Engine Oil

⚠WARNING

Never open the oil port while the engine is running. Hot oil can spray over your face and body. Engine is shipped without oil. You must add oil before first use.

Use the recommended oil type for your engine and expected ambient conditions. (See the Engine Manual section of this manual for the oil type and capacity, and more detailed oil check/fill instructions.)

Step 4. Add Fuel

⚠WARNING

Fuel Fire/Explosion Hazard

Gasoline is highly flammable and explosive. Heat, sparks, and flames can ignite fuel vapors, which can become widespread during fueling. A flash fire and/or explosion could result and cause serious injury or death. Always use extreme care when handling fuels. Carefully follow all instructions to avoid the following conditions which could result in fuel ignition:

- gas vapor collection inside enclosures
- static electric sparks
- sparks from electric wiring, batteries, or running engines
- sources of heat (such as a hot engine exhaust)
- open flames, including pilot lights

Always follow these general safety rules when fueling:

1) Turn pressure washer off and allow to cool for at least two minutes before removing any fuel cap.

Note: A running or still-hot engine is hot enough to ignite fuel.

2) Fill fuel tank OUTDOORS – never indoors. Fuel vapors can ignite if they collect inside and enclosure and explosion can result.

3) Stay away from all sources of heat, sparks, and flames. Do not smoke.

4) Never pump fuel directly into the gas tank at a gas station – it could cause a static electric spark. Follow these steps to avoid static electric sparking during fueling:

● Use an approved portable container to transfer fuel to the pressure washer's tank. (A portable container made of metal or conductive plastic is preferred because it dissipates charge to ground more readily.)

● Always place container on the ground to be filled. Never fill the portable gas container while it is sitting inside a vehicle, trailer, trunk, or pick-up truck bed.

● Dissipate static charge from your body before beginning the fueling process by touching a grounded metal object at a safe distance from fuel sources.

● Keep nozzle in contact with container while filling. Do not use a nozzle lock-open device.

5) Clean up fuel spills/splashes immediately.

● If possible, move the pressure washer away from spilled fuel on the ground.

● Wipe up spilled fuel and wait 5 minutes for excess fuel to evaporate before starting engine.

● Fuel soaked rags are flammable and should be disposed of properly.

● If fuel is spilled on your skin or clothes, change clothes and wash skin immediately.

Step 5. Fill Engine Fuel Tank

Check the gasoline tank level. If needed, fill tank with fresh unleaded gasoline from a portable container:

1) Remove engine gas cap.

2) Add gasoline through the fill opening:

● Use only a UL listed portable gasoline container to transfer the gasoline to engine's tank.

● Do NOT overfill the gasoline tank. Allow at least 1/2" of empty space below the fill neck to allow for fuel expansion.

3) Replace gas cap securely before starting engine.

4) Store extra gasoline in a cool, dry place in a UL listed tightly sealed container.

Step 6. Inspect Fuel System/Check for Leaks

⚠WARNING
Gasoline fuel is highly explosive and fuel leaks can result in fire or explosions. You can be burned and seriously injured if the fuel system is not properly hooked up or there is a fuel leak when you start the engine.

Inspect the engine fuel system and check for leaks before each use.

Do not start pressure washer until all needed repairs have been completed.

Inspect the entire fuel system. Look for:

● signs of leaks or deterioration

● chafed or spongy fuel hose

● loose connections

● loose or missing fuel hose clamps

● damaged fuel tank

● defective gasoline shut-off valve

Step 7. Inspect Spray System

Always inspect spray system for damage and leaks before each use. Do not start pressure washer until all needed repairs have been completed.

Operating Instructions

⚠WARNING

After you have checked and fueled the equipment and positioned it in a suitable worksite, it is time to start your pressure washer. The following are the procedures necessary for safe, successful operation of the pressure washer.

Instruct Operators. Owner must instruct all operators in safe set-up and operation. Do not allow anyone to operate the pressure washer who has not read the Owner's Manual and been instructed on safe use practices.

Safety Equipment/controls. Always operate with all safety covers, guards, and barriers in place and in good working order, and all controls properly adjusted for safe operation.

Moving Parts. Keep hands, feet, hair and apparel away from moving parts. Air vents may cover moving parts and should be avoided as well. Never remove any guards while the unit is operating.

Ear Protection. Hearing can be damaged from prolonged, close-range exposure to the type of noise produced by this pressure washer. The use of ear plugs or other hearing protection device is recommended for persons working within 15-20 feet of the running pressure washer for an extended period of time.

Eye Protection. Wear OSHA required ANSI "Z87.1" safety glasses when operating or servicing the pressure washer. Pressurized spray from this unit can cause severe injury to the eyes. Small objects can become airborne as the spray contacts them.

⚠CAUTION

HIGH ALTITUDE OPERATION

Operating at an altitude of greater than 2000 feet (610 meters) may affect your engines performance, fuel consumption, and emissions. To remain emissions compliant and improve engine performance at higher altitudes, a high-altitude kit is required. A high altitude kit includes a carburetor jet resized to help correct air / fuel mixture at altitude. To order a high altitude kit or if you have additional questions, go to www.northerntool.com or contact us at 1-877-234-6869. Please note, engines with the high-altitude kit installed operated at lower altitudes could cause severe engine damage and affect emissions compliance. When modified, a tag or decal should be added to the product stating that a high-altitude kit was installed and to remind you to re-service the carburetor (re-jet) when operating in lower altitude environments.

Step 1. Connect Hoses and Water Supply

Position Pressure Washer for Use

● For detailed instruction on positioning the pressure washer for use, see the Before Each Use section of this manual and reference Step 2: Select Suitable Location.

● In a location free of flammable vapors, dusts, and gases.

● In a location with adequate, unobstructed ventilation airflow.

● In a location with clearance from combustible materials.

● On a firm, level, heat-resistant surface with good drainage and nearby access to a continuous water supply.

Step 2. Attach Garden Hose to Water Inlet

1.) Make sure the water supply is clean. Debris can cause excess pump wear and reduce performance.

2.) The water supply garden hose must have an inside diameter of at least 5/8''. If the hose is more than 100 ft. long, the diameter must be at least 3/4''.

3.) Never use a reservoir tank as a water source. Drawing water out of a tank may cause pump cavitation and damage to your pump. This pressure washer is designed for a pressurized water source such as a city water faucet. The water source pressure must not exceed 115 psi (8 bar).

4.) Always use a flexible rubber hose for your water supply. Do not use rigid piping.

Step 3. Attach High Pressure Hose to Spray Gun and Water Outlet

⚠WARNING

NEVER operate this pump with components (such as hose, connections, and spray gun) rated for lower pressure and/or temperature limits than the machine's maximum rated pressure and temperature, or component could rupture and cause serious personal injury from escaping high pressure fluids.

1) See the Main Parts of Pressure Washer section of this manual for location of the pressure washer's water outlet.

2) To attach the pressure hose to the spray gun, spin the pressure hose's 22mm coupler onto the spray gun's inlet and hand tighten.

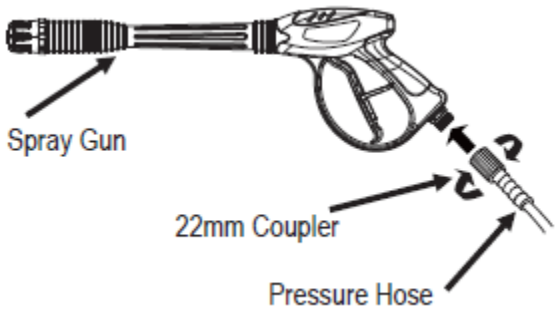

Step 4. Start the Engine to Power the Pump

1. Make sure a water supply is connected and primed.

Note: Running the pump dry will cause damage and void the warranty.

2. To prevent accidental spraying, engage the safety latch on the spray gun trigger by rotating it to the locked position.

3. Follow these instructions for starting the engine:

a) To start a cold engine, move the choke lever to the close position. To restart a warm engine, leave the choke lever in the open position. The choke lever opens and closes the choke valve in the carburetor. The close position enriches the fuel mixture for starting a cold engine. The open position provides the correct fuel mixture for operation after starting, and for restarting a warm engine.

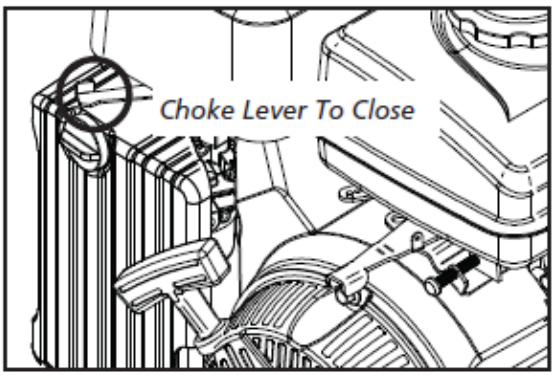

b) Move the throttle lever away from the SLOW position, about 1/3 of the way toward the FAST position. The throttle controls the engine speed. Moving the throttle lever in one direction or the other makes the engine run faster or slower.

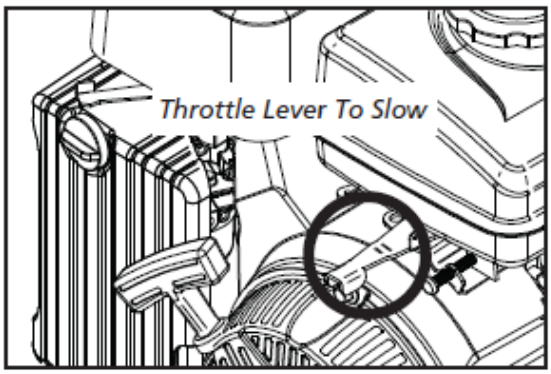

c) Turn the engine switch to the ON position. The engine switch enables and disables the ignition system. The engine switch must be in the ON position for the engine to run. Turning the engine switch to the OFF position stops the engine.

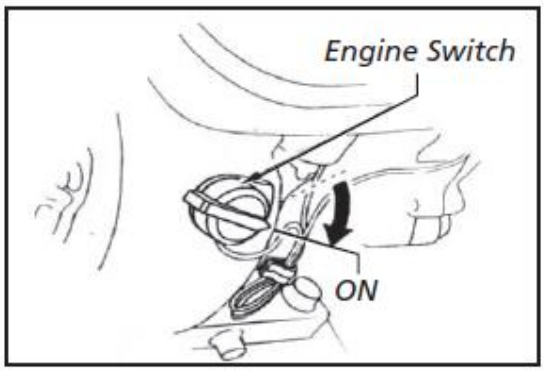

d) Operate the Recoil Starter: Pull the starter grip lightly until you feel resistance, and then pull briskly. Return the starter grip gently. Pulling the starter grip operates the recoil starter to crank the engine.

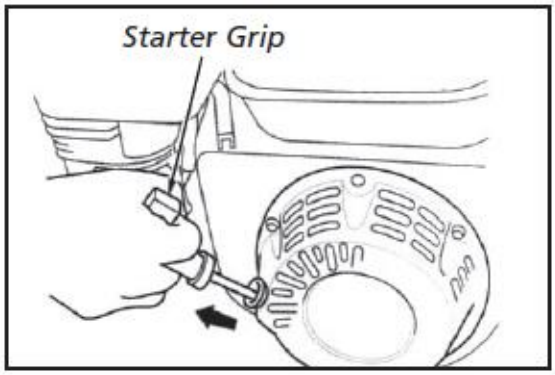

e) If the Choke lever has been moved to the closed position to start the engine, gradually move it to the open position as the engine warms up.

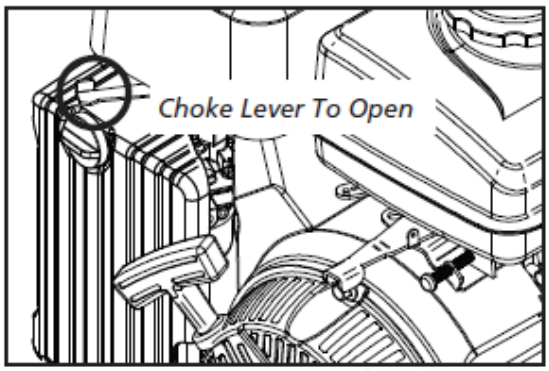

Setting the Engine Speed

Position the throttle lever for the desired engine speed. Moving the throttle lever in the directions shown makes the engine run faster or slower.

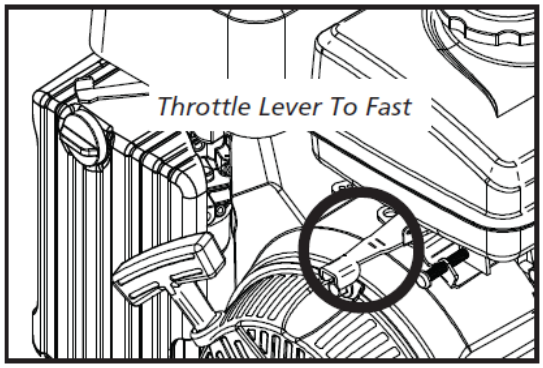

After starting the engine, move the throttle lever to the FAST position and check the pump output. The pump output is controlled by adjusting the engine speed. Moving the throttle lever in the FAST direction will increase the pump output, and moving the throttle lever in the SLOW direction will decrease the pump output.

Beginning the High Pressure Spraying

⚠WARNING

- **Keep spray away from people**. Never direct discharge stream at or near any person. Do not allow any part of the body to come in contact with the fluid stream. High-pressure spray can cause serious skin, eye, or falling injuries. Injection injury will occur if high-pressure spray pierces the skin, injecting liquid under the skin. Injection injury can result in blood poisoning and/or severe tissue damage leading to infection, gangrene and possibly amputation. Seek medical attention.
- **Do not secure trigger open.** To reduce risk of injury, do not attempt to secure the spray gun open by blocking or tying the spray gun in the open position.
- **Prevent slips / loss of balance.** High-pressure spray could cause you to lose balance from kickback forces, and wet surfaces can be slippery.
  - Keep good footing and balance at all times. Do not overreach.
  - Do not stand on unstable support when spraying.
  - If spraying from an elevated surface, use fall protection because spray gun kickback can propel you off the elevated surface. When spraying from a ladder or scaffolding, ensure it is firmly anchored from sway or tip-over.
  - Be aware of puddles and slippery surfaces. Ensure there is adequate drainage to prevent pooling of water. Wear proper nonslip footwear.
- **Prevent surface damage and flying debris -** Surfaces being sprayed must be strong enough to with stand high-pressure spray or damage may result. In addition, high-pressure spray will dislodge unsecured objects as well as surface chips and debris, resulting in hazardous flying objects that can cause personal injury or property damage. Do not spray brittle surfaces or breakable, fragile, or unsecured objects such as:
  - stucco or laminar flagstone

- some painted surfaces
- windows or glass doors (because they may break)
- light fixtures, flowerbeds, mailboxes
- unsecured, lightweight objects

1). Be sure people and pets are not in the area, especially children.

2). Hold the spray gun firmly with two hands. Have a sturdy stance; the gun will kick back when triggered.

3). Wash from the bottom to the top using side-to-side motions. This washes away heavy dirt and allows the detergent to soak as you work toward the top.

4). Use the width of the spray pattern to wash a wide path. Overlap the spray paths for complete coverage.

5). Small parts should be washed in a basket so the pressure does not push them away. Larger, lightweight parts should be clamped down.

6). Always turn off the engine and activate the spray gun trigger to relieve system pressure when:

- the sprayer is unattended, or
- disconnecting hoses and servicing the pump.

Shutting Down the Pressure Washer

⚠WARNING

- Never disconnect the high-pressure hose from the pump or spray gun while the system is pressurized.
- Relieve pressure by squeezing the spray gun trigger after the engine is turned OFF.

Stopping the Engine

Turn the engine OFF.

To stop the engine in an emergency, simply turn the engine switch to the OFF position. Under normal conditions, use the following procedure:

a) Move the throttle lever to the SLOW position.

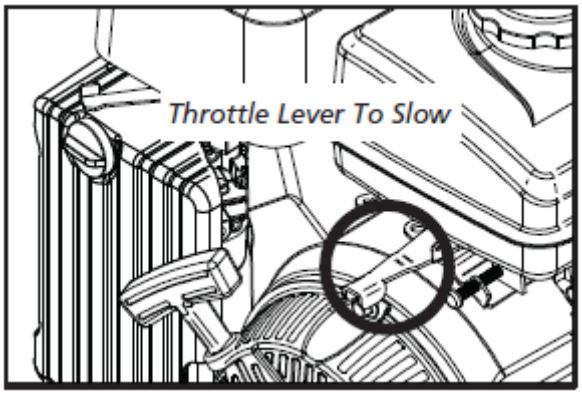

b) Turn the engine switch to the OFF position.

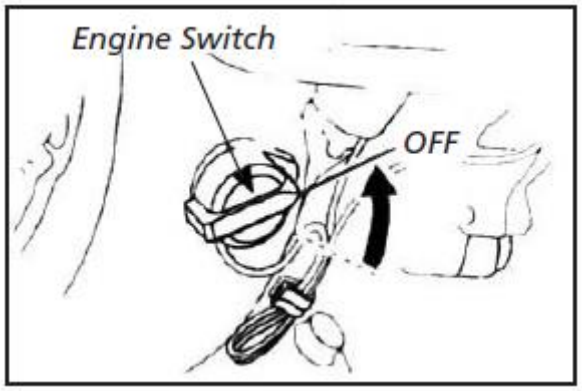

c) Turn the water supply OFF.

d) Actuate the spray gun trigger to relieve system pressure.

e) Remove the garden hose.

f) Remove the pressure hose.

g) Cool the engine at least five minutes before storing; a hot engine is a fire hazard.

After Each Use

When you are finished using the pressure washer, you must prepare the sprayer for storage and store it in a proper location.

1. Make sure the engine start switch is OFF.
2. Disconnect the engine spark plug wire if you haven't already done so.
3. Disconnect the high-pressure hose, garden hose, and spray gun.
4. Let the engine cool for 5 minutes before moving the pressure washer to its storage location.

Maintenance

⚠WARNING

ALWAYS shut off the water supply, bleed the water pressure, turn off the engine, and disconnect the spark plug wire before cleaning, adjusting, or servicing the pressure washer. After servicing, make sure all guards and cover shields are replaced before using.

Maintenance Schedule

		Each	Whichever comes first			
		Items	First month or 20 hours	Every 3 months or 50 hours	Every 6 months or 100 hours	Every year or 300 hours
Engine oil check	Oil level	●				
	Oil change		●		●	
Air cleaner	Check	●				
	Check					
Spark plug				●1		●2
Valve clearance adjustment						
Clean combustion chamber						
Spark eliminator		Every 100 hours running lean				
Fuel supply pipe		Replace every 2 years				
Clean inlet filter		●				
Check tire pressure		●				

Key

1. If used in extremely dusty areas, this maintenance should be done more often.

2. Should only be done by an authorized service technician, unless you are equipped with proper repair tools.

Engine Oil Replacement

⚠WARNING

Burn Hazard. Never open oil port while engine is running. Hot oil can spray over face and body.

A warm engine can ensure quick oil draining.

- Remove the oil filler cap and oil drain plug and drain the oil.
- Reinstall the oil drain plug and tighten it. Put the oil filler cap in place.
- Fill specified fresh engine oil to the level index mark.

Note: Oil capacity is 0.35L.

Air Cleaner Maintenance

A dirty air cleaner will decrease the airflow quantity through the carburetor. To avoid issues with the carburetor, clean the air cleaner regularly. In extremely dusty areas, this should be done more often.

⚠WARNING

Never clean the air cleaner in gasoline or low-flash point solvent, for gasoline and low-flash point solvent may produce flames and even an explosion in certain conditions.

CAUTION

Never operate the water pump without the air cleaner installed. In the case that dirt and dust is sucked into the engine, the engine will wear out more quickly.

1. Drive off the thumbnut and remove the air cleaner cover and filter element.
2. Replace the filter element with a factory approved filter.
3. Reinstall the removed parts.

Spark Plug Maintenance

To keep the engine in good, working condition, check the spark plugs regularly and keep them clean and free of accumulated carbon.

1. Remove the spark plug cap.

⚠WARNING

When the engine has been running, the exhaust muffler is very hot and dangerously hot to the touch.

2. Check the spark plug visually. If there are signs of wear around it or the gasket is cracked, replace it with a new one. Before reinstalling a spark plug, clean it with a wire brush.

3. Measure the spark plug gap with a feeler gauge and adjust it by bending the side electrode. The spark plug clearance should be 0.70-0.80mm.

4. Check that the spark plug gasket is in good condition or replace it with a new one. Drive it into the engine with a spark plug wrench to protect the thread from being damaged.

Note: When installing a new spark plug, after it touches and presses the gasket, twist a half turn; for a used spark plug, twist 1/8-1/4 turn.

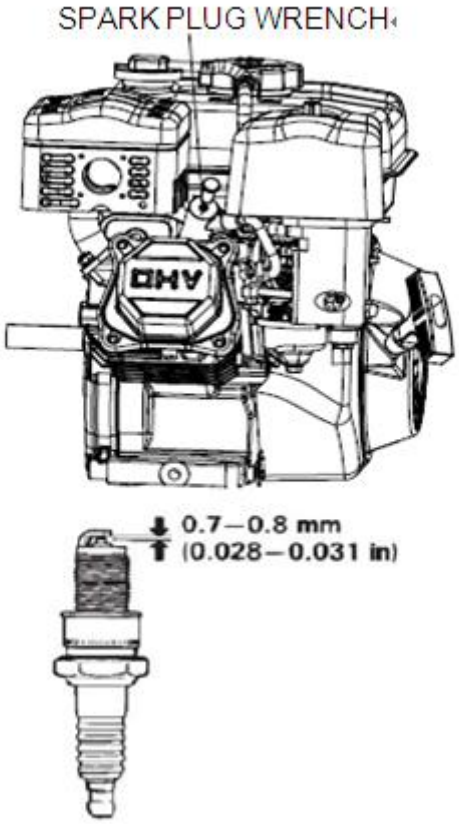

⚠CAUTION
Be sure to tighten the spark plug securely, otherwise it may become very hot and possibly damage the engine. Never use a spark plug with the improper heat range.

Troubleshooting

This section provides a list of the more frequently encountered pressure washer malfunctions, their causes and corrective actions. Some corrective actions can be performed by the operator or maintenance personnel, and others may require assistance of a qualified electrician or Service Center.

Failure	Possible Cause	Corrective Action
ENGINE WILL NOT START	Low Oil Shutdown	Fill engine with the adequate amount of oil
	Cold Engine	Choke engine to start
	No Fuel	Add gas to fuel tank - Make sure fuel shutoff valve is open
	Engine not turned ON	Place ON/OFF switch in the ON position
	Spark plug wire not attached	Attach spark plug wire to spark plug
LOW/SURGING PRESSURE	Insufficient water supply	Increase water flow - Check for kinked or pinched hose
	Plugged inlet screen	Pull out and clean screen carefully
	Leak in high pressure line	Fix leaks
NO CHEMICAL INJECTION	Back pressure from extra - long hose	Try shorter high pressure hose
	Leak in clear chemical hose	Replace hose. Use hose clamps if necessary
	Chemical strainer not submerged	Make sure strainer is completely submerged in solution

Parts Diagram of Pressure Washer

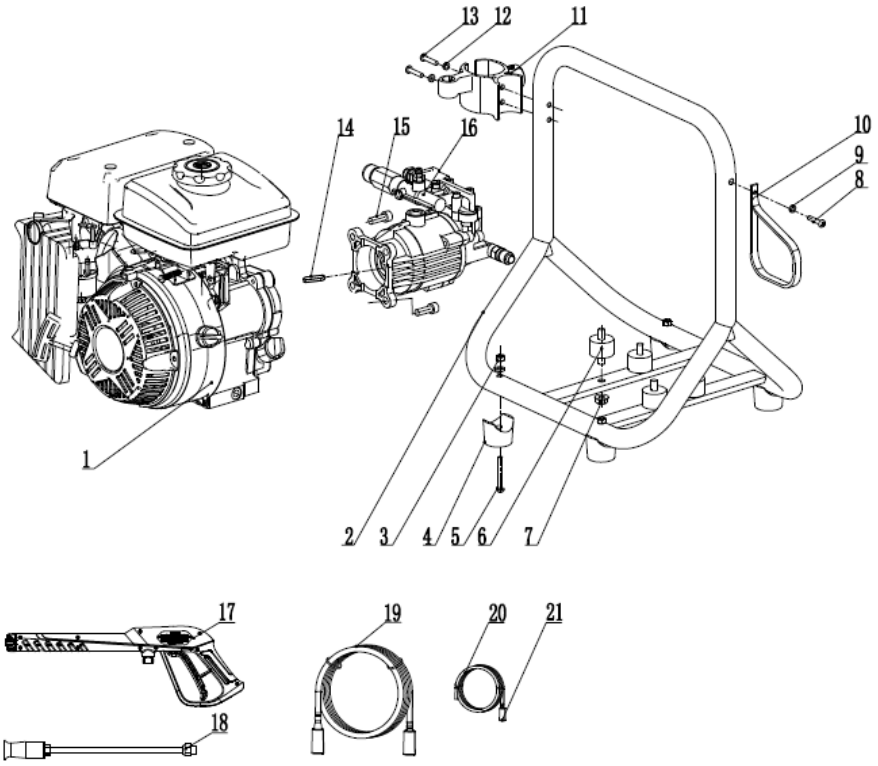

Parts List of Pressure Washer

Ref.	Code	Description	Qty.
1	SDGPW4000-NT-001E	ENGINE	1
2	S815042	FRAME	1
3	90023	M6 LOCK NUT	4
4	813015	FOOT, FRAME ISOLATING	4
5	91880	M6*40 SCREW	4
6	N/A	VIBRATION	4
7	90018	M8 BOLT	4
8	92050	M6*16 SCREW	1
9	94025	FLAT GASKET φ6.4	1
10	814027V229	HOSE RIBBON	1
11	814020	UPPER GUN HOLDER	1
12	94024	FLAT GASKET Φ6.6	6
13	91827	M6*35 SCREW	2
14	246503	FLAT KEY	1
15	91345	M8 x 20 BOLT	4
16	S810019	WATER PUMP ASSEMBLY	1
17	S817058	SPRAY GUN	1
18	S817059	SPRAY LANCE	1
19	S811524	HOSE	1
20	811002	SIPHON TUBE	1
21	817005	FILTER,SIPHON TUBE	1

Parts Diagram of Pump

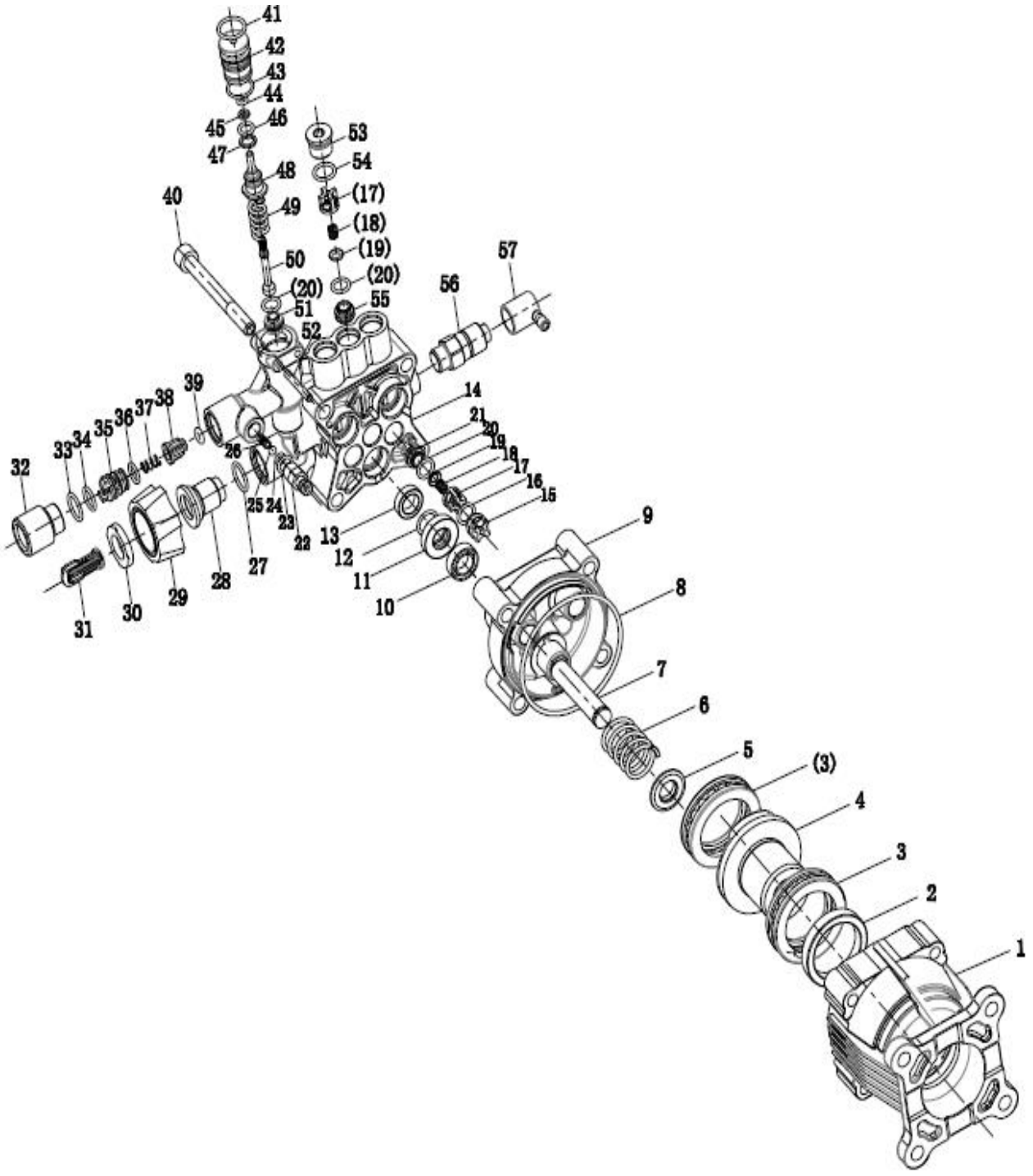

Parts List of Pump

Ref.	Code	Description	Qty.
1	8105	SWASH PLATE BOX	1
2	8106	OIL SEAL	1
3	8107	BEARING	2
4	8108	SWASH PLATE	1
5	8109	SPRING	3
6	8110	SPRING	3
7	8111	PLUNGER	3
8	8112	O-RING 70×2.5	1
9	8113	PLUNGER SEAT	1
10	8114	OIL SEAL	3
11	8115	WATER SEAL SEAT	3
12	8116	O-RING 11.8×1.8	3
13	8117	WATER SEAL 12×18×5	3
14	8118	PUMP HEAD	1
15	8119	SUPPORT SEAT	3
16	8120	O-RING 9.5×1.8	3
17	8121	COVER, VALVE	6
18	8122	SPRING	6
19	8123	GASKET	6
20	8124	O-RING 9×1.8	7
21	8125	VALVE SEAT	3
22	8126	IMBIBITION BAZOO	1
23	8127	O-RING 7.65×1.78	1
24	8128	O-RING 3.68×1.78	1
25	8129	STEEL BALL	1
26	8130	SPRING	1
27	8131	O-RING 14×1.8	1
28	8132	INLET CONNECTOR	1

Ref.	Code	Description	Qty.
29	8133	NUT	1
30	8134	WASHER	1
31	8135	INLET FILTER	1
32	8136	OUTLET CONNECTOR	1
33	8137	O-RING 13.2×1.8	1
34	8138	O-RING 10.6×1.8	1
35	8139	VENTURI TUBE	1
36	8140	O-RING 9×1.8	1
37	8141	SPRING	1
38	8142	SPOOL	1
39	8143	O-RING 4×2.65	1
40	8144	SCREW	4
41	8145	O-RING 15×1.8	1
42	8146	COVER, VALVE	1
43	8147	O-RING 14.5×1.5	1
44	8148	O-RING 3.75×1.5	1
45	8149	RING	1
46	8150	O-RING 7.1×1.8	1
47	8151	RING	1
48	8152	VALVE SPOOL	1
49	8153	VALVE SPRING	1
50	8154	VALVE STEM	1
51	8155	VALVE SEAT	1
52	8156	PIN	2
53	8157	VALVE HEAD	3
54	8158	O-RING 11.2×1.8	3
55	8159	INLET/OUTLET VALVE SEAT	3
56	8160	THERMOSTAT VALVE	1

Parts Diagram of Engine

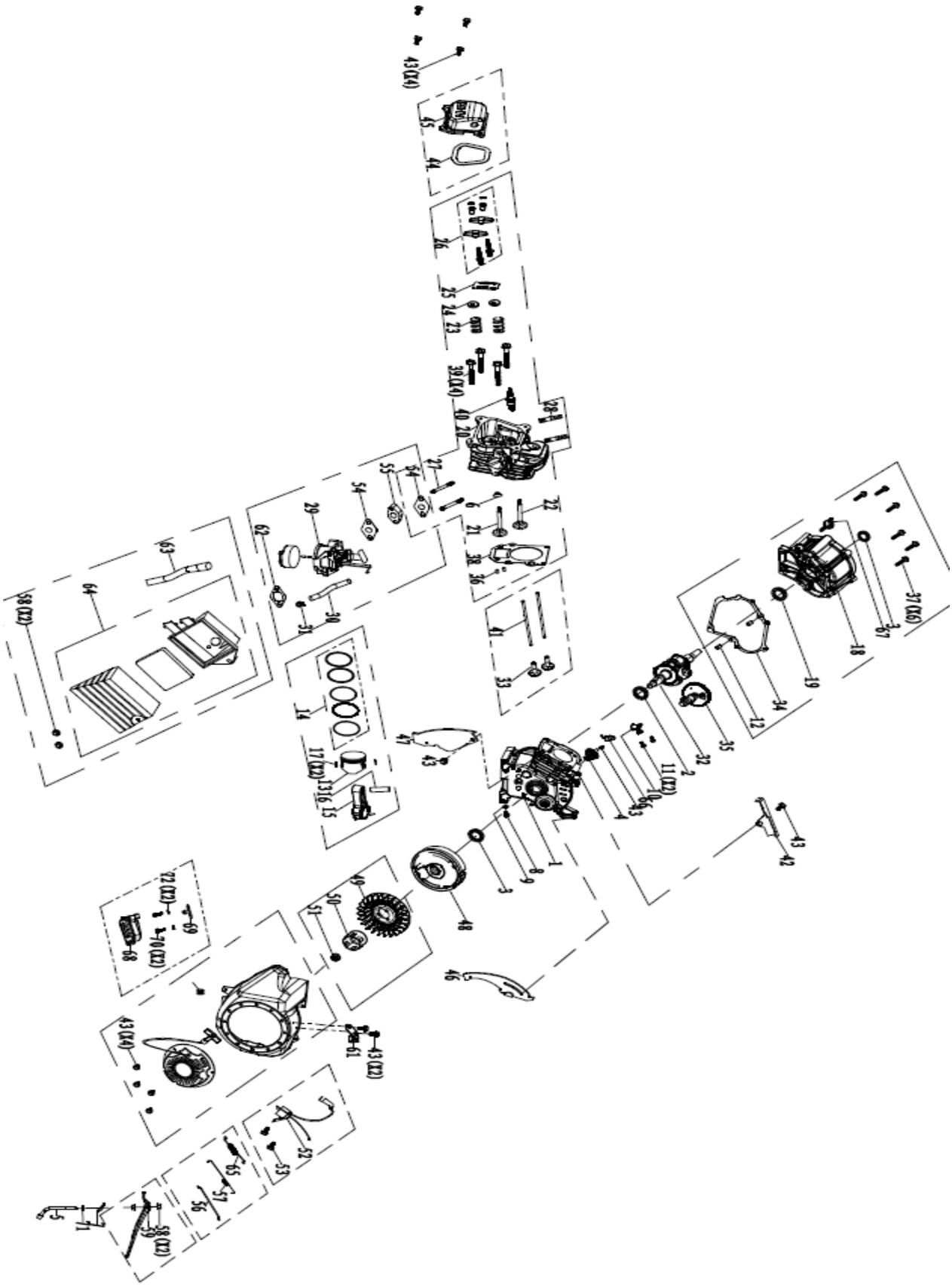

Parts List of Engine

Ref.	Code	Description	Qty.
1	210203	CRANKCASE	1
2	93005	BALL BEARING	1
3	93502	OIL SEAL	2
4	224301	GOVERNOR ASSEMBLY	1
5	223901	SHAFT, GOVERNOR ARM	1
6	96803	WASHER, GOVERNOR ARM SHAFT	1
7	243902	PIN, LOCK	1
8	91816	BOLT, DRAIN PLUG	1
9	94007	WASHER, DRAIN PLUG	1
10	241805	RETURNER, INTAKE VALVE	1
11	210801	CILP	1
12	240901	DOWEL PIN, CASECOVER	2
13	211202	PISTON	1
14	211602	SCRAPER RING SET, PISTON	1
15	221501	ROD ASSEMBLY, CONNECTING	1
16	225501	PIN, PISTON	1
17	221301	CLIP, PISTON	2
18	220101	COVER ASSEMBLY, CRANKCASE	1
19	93019	BALL BEARING	1
20	221004	CYLINDER HEAD	1
21	221701	VALVE, IN	1
22	225902	VALVE EXHAUST	1
23	226001	SPRING, VALVE	2
24	241801	SEAT, VALVE SPRING, IN	2
25	222201	PLATE, PUSH ROD GUIDE	1
26	222101	ROCKER ASSEMBLY	2
27	91023	BOLT, STUD	2
28	91007	BOLT, STUD	2
29	212803	CARBURETOR ASSEMBLY	1
30	95451	FUEL LINE	1
31	94404	CLIP, FUEL LINE	1
32	210314	CRANKSHAFT ASSEMBLY	1
33	226101	LIFTER, VALVE	2
34	96027	PACKING, CASECOVER	1
35	222003	CAMSHAFT ASSEMBLY	1

Ref.	Code	Description	Qty.
41	97101	SPARK PLUG	1
42	221901	ROD, PUSH	2
43	220501	SHROUD	1
44	91325	BOLT M6X12	16
45	96045	PACKING, HEADCOVER	1
46	241111	COVER COMP, CYLINDER HEAD	1
47	220502	WIND SHIELD, LH	1
48	220503	WIND SHIELD, RH	1
49	220401	FLYWHEEL ASSEMBLY	1
50	224601	FAN, RECOIL STARTER	1
51	224501	PULLEY, STARTER	1
52	90014	NUT M12	1
53	97508	IGNITION COIL ASSY	1
54	96032	PACKING, INTAKE	2
55	222301	INSULATOR, CARBURETOR	1
56	222701	ROD, GOVERNOR	1
57	224202	SPRING, THROTTLE RETURN	1
58	90016	NUT M6	4
59	224001	GOVERNOR ARM	1
60	224710-010	RECOIL STARTER ASSEMBLY	1
61	224403	SHROUD ASSY, UPPER	1
62	96035	GASKET, AIR CLEANER	1
63	95602	TUBE, BREATHER	1
64	222901	AIR CLEANER ASSEMBLY	1
65	224101	SPRING, GOVERNOR	1
66	245104	AMPLIFIER	1
67	225602	DIPSTICK	1
68	90011	NUT M8	2
69	94403	CLIP, FUEL LINE Φ7.5	1
70	96033	PACKING, EXHAUST	1
71	223701	MUFFLER COMP	1
72	245205	SWITCH ASSEMBLY	1
73	213601	FUEL TANK CAP COMP	1
74	245104	AMPLIFIER	1
75	225102	SWITCH ASSEMBLY, OIL LEVEL	1

Ref.	Code	Description	Qty.
36	220901	PIN, DOWEL	2
37	91333	BOLT M6X28	6
38	91331	BOLT M6X25	2
39	96025	GASKET, CYLINDER HEAD	1
40	91352	BOLT M8X50	4

Ref.	Code	Description	Qty.
76	91303	BOLT M6X16	2
77	213102-010	FUEL TANK ASSEMBLY	1

Replacement Parts

- For replacement parts and technical questions, please call Customer Service at **1-877-234-6869**.
- Not all product components are available for replacement. The illustrations provided are a convenient reference to the location and position of parts in the assembly sequence.
- When ordering parts, the following information will be required: item description, item model number, item serial number/item lot date code, and the replacement part reference number.
- The distributor reserves the rights to make design changes and improvements to product lines and manuals without notice.

Limited Warranty

Northern Tool and Equipment Company, Inc. ("We" or "Us") warrants to the original purchaser only ("You" or "Your") that the Ironton product purchased will be free from material defects in both materials and workmanship, normal wear and tear excepted, for a period of **90 days** from date of purchase. The foregoing warranty is valid only if the installation and use of the product is strictly in accordance with product instructions. There are no other warranties, express or implied, including the warranty of merchantability or fitness for a particular purpose. If the product does not comply with this limited warranty, Your sole and exclusive remedy is that We will, at our sole option and within a commercially reasonable time, either replace the product or product component without charge to You or refund the purchase price (less shipping). This limited warranty is not transferable.

Limitations on the Warranty

This limited warranty does not cover: (a) normal wear and tear; (b) damage through abuse, neglect, misuse, or as a result of any accident or in any other manner; (c) damage from misapplication, overloading, or improper installation; (d) improper maintenance and repair; and (e) product alteration in any manner by anyone other than Us, with the sole exception of alterations made pursuant to product instructions and in a workmanlike manner.

Obligations of Purchaser

You must retain Your product purchase receipt to verify date of purchase and that You are the original purchaser. To make a warranty claim, contact Us at 1-877-234-6869, identify the product by make and model number, and follow the claim instructions that will be provided. The product and the purchase receipt must be provided to Us in order to process Your warranty claim. Any returned product that is replaced or refunded by Us becomes our property. You will be responsible for return shipping costs or costs related to Your return visit to a retail store.

Remedy Limits

Product replacement or a refund of the purchase price is Your sole remedy under this limited warranty or any other warranty related to the product. We shall not be liable for: service or labor charges or damage to Your property incurred in removing or replacing the product; any damages, including, without limitation, damages to tangible personal property or personal injury, related to Your improper use, installation, or maintenance of the product or product component; or any indirect, incidental or consequential damages of any kind for any reason.

Assumption of Risk

You acknowledge and agree that any use of the product for any purpose other than the specified use(s) stated in the product instructions is at Your own risk.

Governing Law

This limited warranty gives You specific legal rights, and You also may have other rights which vary from state to state. Some states do not allow limitations or exclusions on implied warranties or incidental or consequential damages, so the above limitations may not apply to You. This limited warranty is governed by the laws of the State of Minnesota, without regard to rules pertaining to conflicts of law. The state courts located in Dakota County, Minnesota shall have exclusive jurisdiction for any disputes relating to this warranty.



Distributed by:

Northern Tool & Equipment Company, Inc.

Burnsville, Minnesota 55306

www.northerntool.com

Made in China