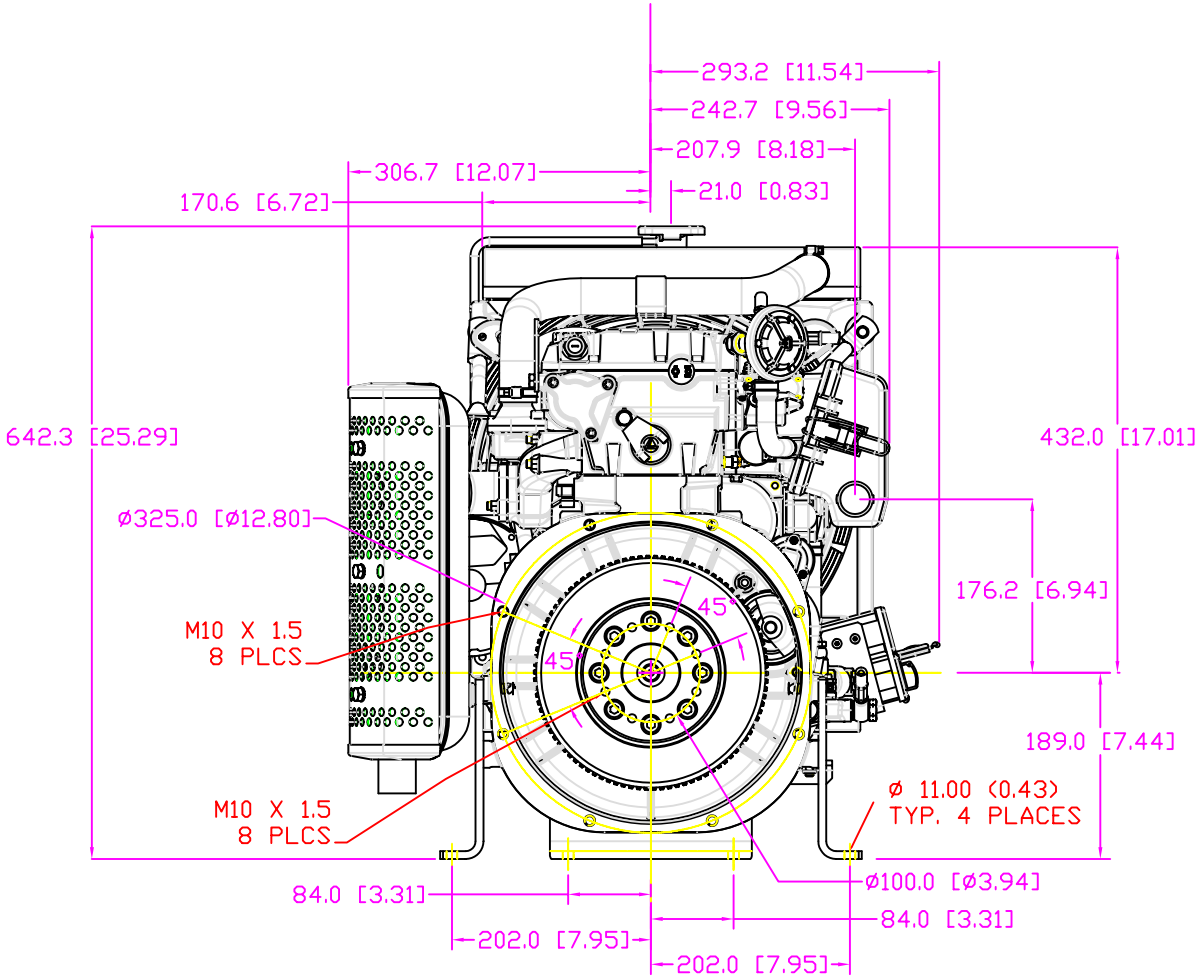

FIRST ANGLE PROJECTION

Disclaimer- The design of the objects depicted on this drawing is the sole property of Lombardini USA Inc. This drawing may not be duplicated, altered or distributed without the express written consent of Lombardini USA Inc.

Lombardini USA Inc. reserves the right to change this drawing with respect to form, design, materials or otherwise without notice to you.

TOLERANCES (EXCEPT AS NOTED)

DECIMAL ±

FRACTIONAL ±

ANGULAR ±

REVISIONS			DESCRIPTION OF REVISION
NO.	DATE	BY	

LOMBARDINI U.S.A. Inc.
2150 Boggs Road, Bldg. 300
Duluth, GA. 30136 tel: (770) 623-3554

KDW 1003 HIGH SPEED DPU
W/GROUP 8 INTERCHANGE & RADIATOR 7350-321/322

DRAWN BY TLA	SCALE 1:1	MATL NA
CHK'D	DATE 05/05/08	DRAWING NO.
DO NOT SCALE DRAWING	APP'D	