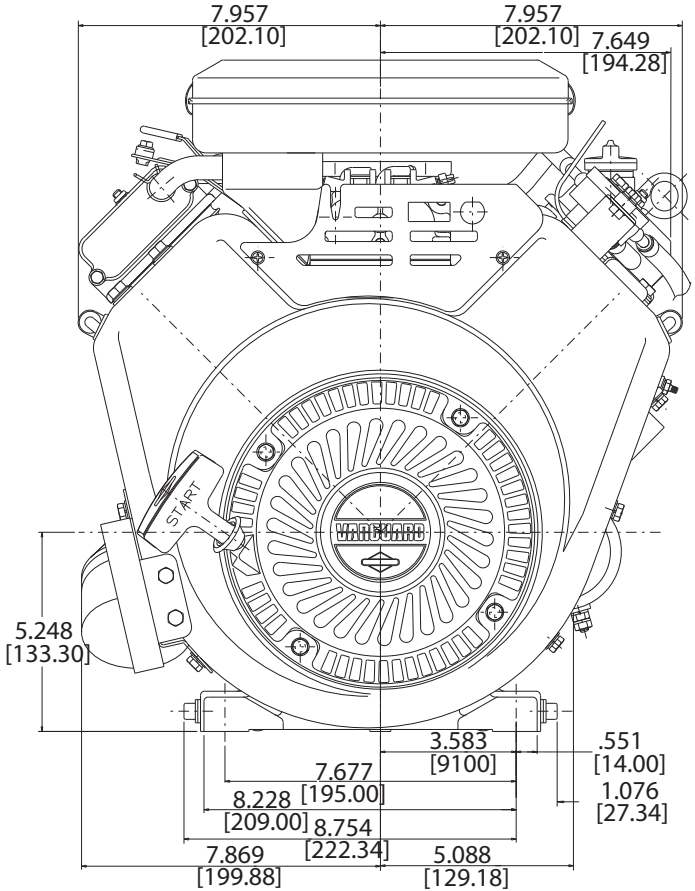
7.957
[202.10]
7.957
[202.10]
7.649
[194.28]
START
5.248
[133.30]
3.583
[9100]
.551
[14.00]
7.677
[195.00]
1.076
[27.34]
8.228
[209.00]
8.754
[222.34]
7.869
[199.88]
5.088
[129.18]

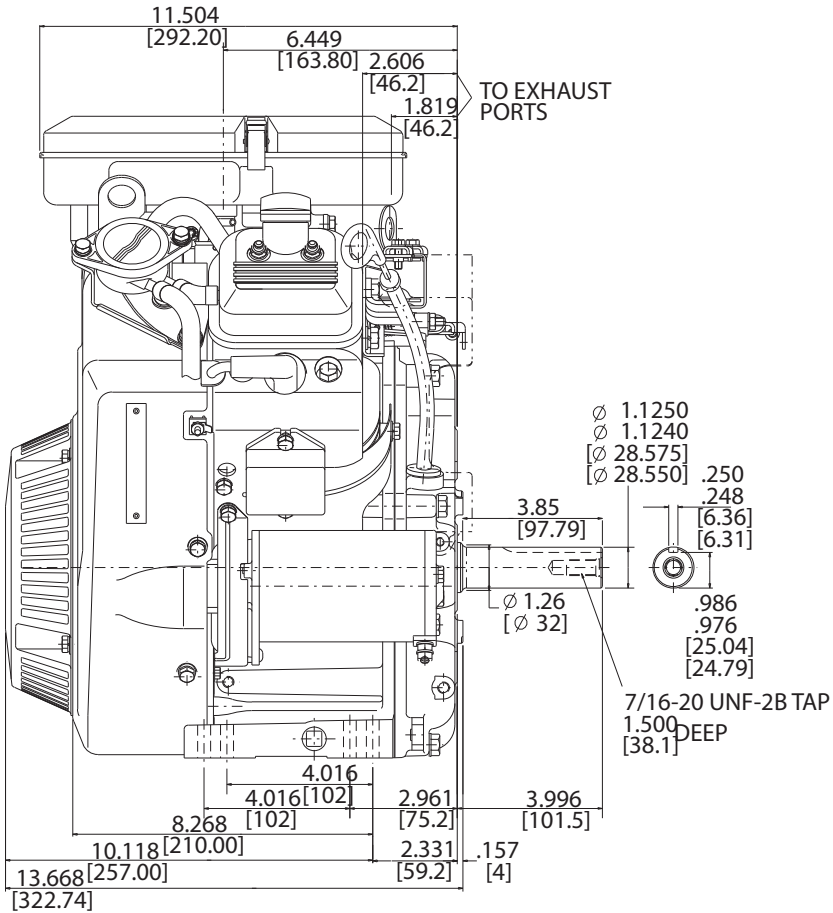
11.504
[292.20]
6.449
[163.80]
2.606
[46.2]
1.819
[46.2]
TO EXHAUST
PORTS
∅ 1.1250
∅ 1.1240
[∅ 28.575]
[∅ 28.550]
.250
.248
[6.36]
[6.31]
3.85
[97.79]
∅ 1.26
[∅ 32]
.986
.976
[25.04]
[24.79]
7/16-20 UNF-2B TAP
1.500
[38.1]
DEEP
4.016
4.016
[102]
[102]
2.961
[75.2]
3.996
[101.5]
8.268
[210.00]
10.118
[257.00]
2.331
[59.2]
.157
[4]
13.668
[322.74]

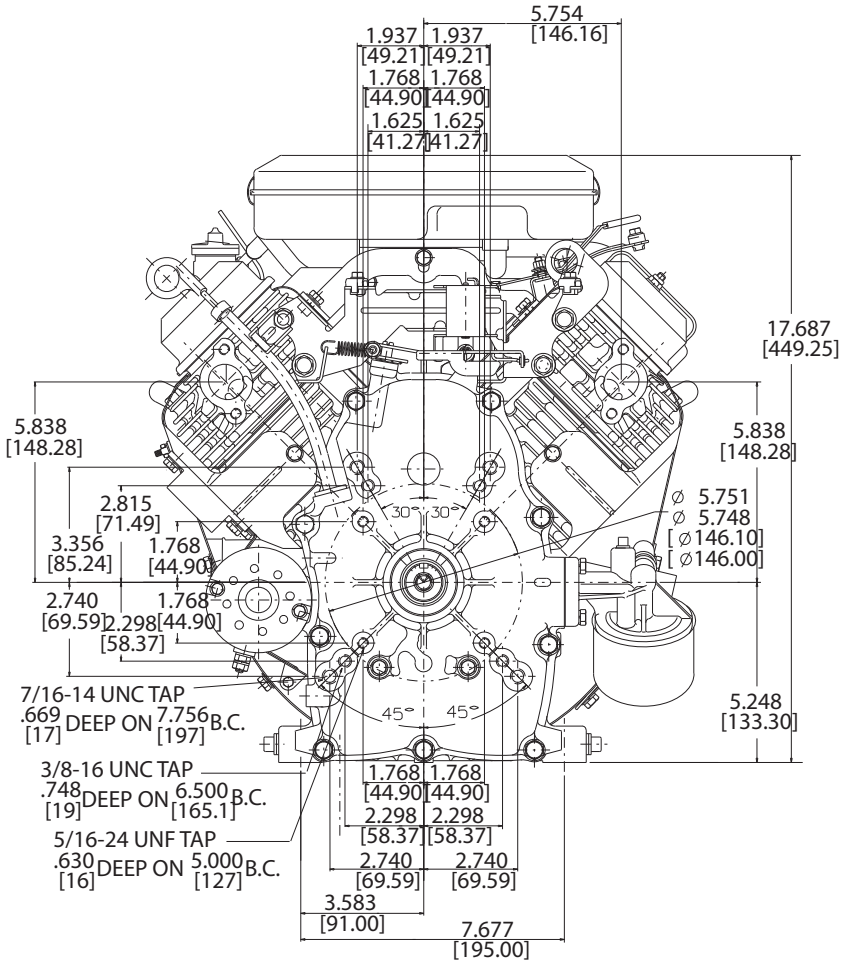
5.754
[146.16]
1.937
[49.21]
1.937
[49.21]
1.768
[44.90]
1.768
[44.90]
1.625
[41.27]
1.625
[41.27]
17.687
[449.25]
5.838
[148.28]
5.838
[148.28]
2.815
[71.49]
3.356
[85.24]
1.768
[44.90]
2.740
[69.59]
2.298
[58.37]
1.768
[44.90]
30°
30°
Ø 5.751
Ø 5.748
[Ø146.10]
[Ø146.00]
7/16-14 UNC TAP
.669
[17]
DEEP ON
7.756
[197]
B.C.
45°
45°
5.248
[133.30]
3/8-16 UNC TAP
.748
[19]
DEEP ON
6.500
[165.1]
B.C.
1.768
[44.90]
1.768
[44.90]
2.298
[58.37]
2.298
[58.37]
5/16-24 UNF TAP
.630
[16]
DEEP ON
5.000
[127]
B.C.
2.740
[69.59]
2.740
[69.59]
3.583
[91.00]
7.677
[195.00]