6 Foot Folding Table

Owner's Manual

WARNING: Read carefully and understand all ASSEMBLY AND OPERATION INSTRUCTIONS before operating. Failure to follow the safety rules and other basic safety precautions may result in serious personal injury.

Item #57317

READ &SAVE THESE INSTRUCTIONS

Thank you very much for choosing an Ironton™ product!

For future reference, please complete the owner's record below:

Serial Number/Lot Date Code: _____

Purchase Date: _____

Save the receipt, warranty, and this manual. It is important that you read the entire manual to become familiar with this product before you begin using it.

This folding table is designed for certain applications only. Northern Tool and Equipment is not responsible for issues arising from modification or improper use of this product such as an application for which it was not designed. We strongly recommend that this product not be modified and/or used for any application other than that for which it was designed.

For technical questions, please call **1-800-222-5381**.

Table of Contents

Intended Use 4
Technical Specifications 4
Important Safety Information 4
Specific Operation Warnings 5
Main Parts of Table 5
Assembly Instructions 5
Parts Diagram 7
Parts List 7
Replacement Parts 7
Limited Warranty 8

Intended Use

The Ironton 6 Foot Folding Table is easy to transport, giving it a variety of uses at home, in the garage, on campgrounds, or anywhere a table comes in handy.

Technical Specifications

Property	Specification
Material	HDPE
Tube	28x1.0mm
Open Size	72.2" L x 30" W x 29" H
Folded Size	37" L x 30" W x 3.4" H

Important Safety Information

⚠WARNING

- Read and understand all instructions. Failure to follow all instructions may result in serious injury or property damage.
- The warnings, cautions, and instructions in this manual cannot cover all possible conditions or situations that could occur. Exercise common sense and caution when using this tool. Always be aware of the environment and ensure that the tool is used in a safe and responsible manner.
- Do not allow persons to operate or assemble the product until they have read this manual and have developed a thorough understanding of how it works.
- Do not modify this product in any way. Unauthorized modification may impair the function and/or safety and could affect the life of the product. There are specific applications for which the product was designed.
- Industrial or commercial applications must follow OSHA requirements.

⚠WARNING

PERSONAL SAFETY

- Serious personal injury or property damage could result from failure to comply with these warnings
- NEVER sit or stand on this table. It could collapse causing injury.

⚠CAUTION

TABLE USE AND CARE

- Always lock the leg braces open while in use to prevent unexpected closure.
- Always unlock the leg braces before closing or the table may be damaged.

Specific Operation Warnings

⚠WARNING

- Avoid the pinch points between the legs and table top.
- Do not exceed the load capacity.
- Use on flat level surface.

Main Parts of Table

Reference	Subassembly
1	Table top
2	Legs

Assembly Instructions

⚠WARNING

- Always lock the leg braces open while in use to prevent unexpected closure.
- Always unlock leg braces before closing or table may be damaged.

Step 1: Remove the folded table from the packing carton.

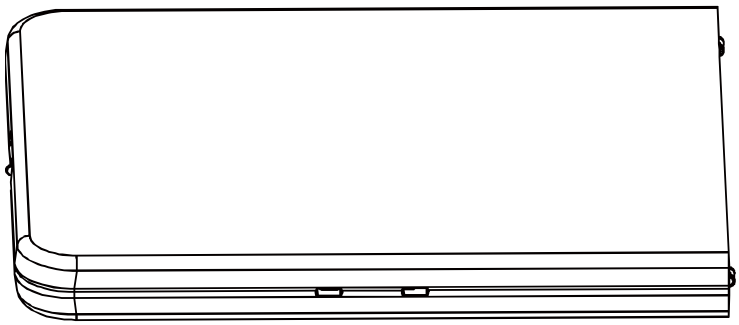

Step 2: Unlock the table.

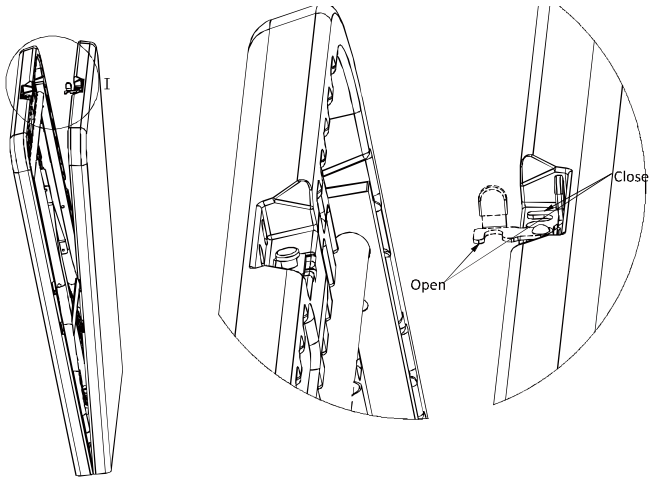

Step 3: Flatten out the table.

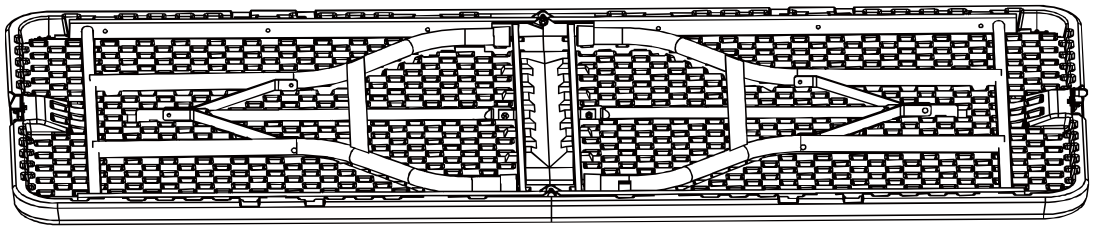

Step 4: Extend one of the legs until it clicks into place.

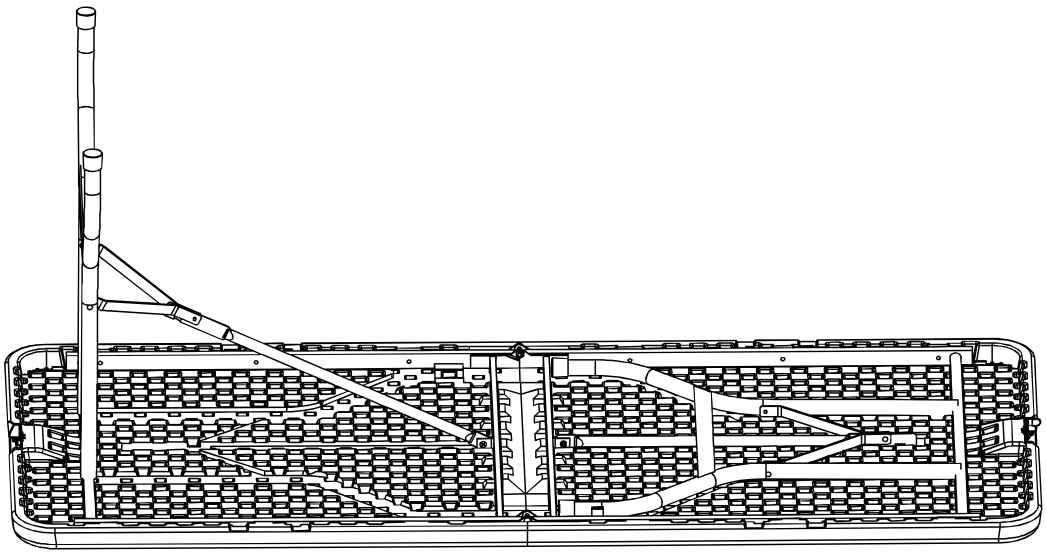

Step 5: Extend the other leg until it clicks into place.

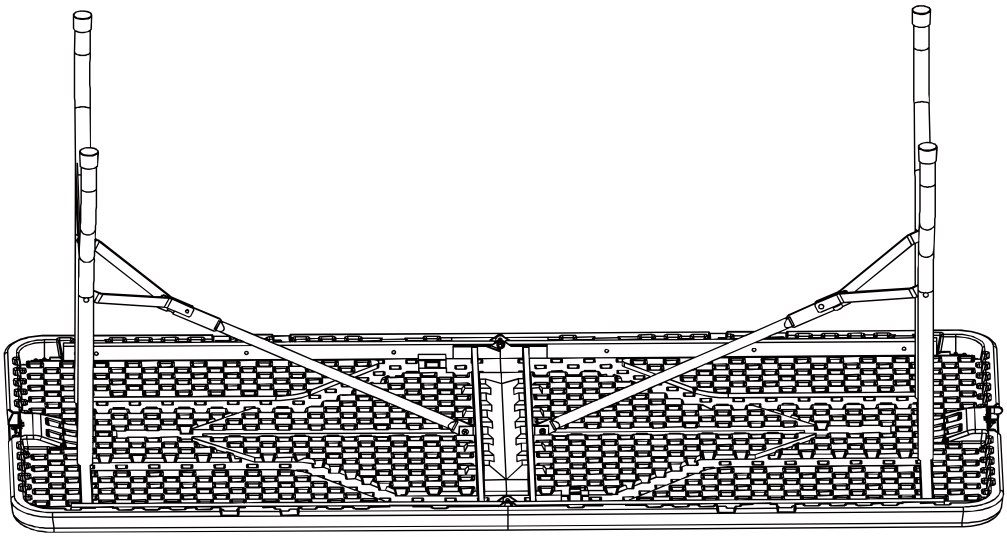

Turn the table over so the legs are sitting evenly on a flat surface. The table is now ready for use.

Parts Diagram

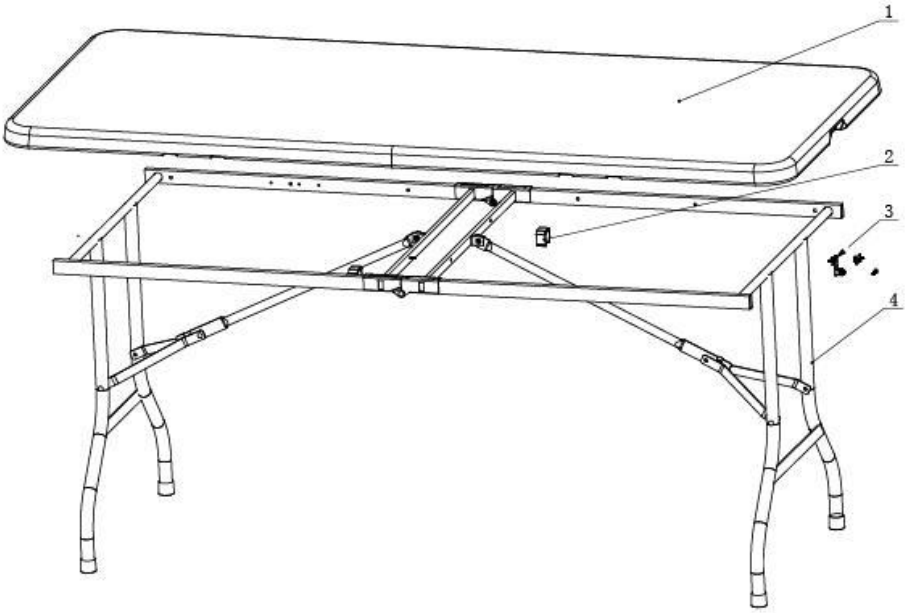

Parts List

Reference	Part Number	Part Description	Quantity
1	FL118-02	Resin table top	1
2	FL118-01	Clip fix for leg	2
3	FL118-04-00	Locking kit	1
4	FL118-03-00	Legs assembly	1

Replacement Parts

- For replacement parts and technical questions, please call Customer Service at **1-800-222-5381**.
- Not all product components are available for replacement. The illustrations provided are a convenient reference to the location and position of parts in the assembly sequence.
- When ordering parts, the following information will be required: item description, item model number, item serial number/item lot date code, and the replacement part reference number.
- The distributor reserves the rights to make design changes and improvements to product lines and manuals without notice.

Limited Warranty

Northern Tool and Equipment Company, Inc. ("We" or "Us") warrants to the original purchaser only ("You" or "Your") that the Ironton product purchased will be free from material defects in both materials and workmanship, normal wear and tear excepted, for a period of **one year** from date of purchase. The foregoing warranty is valid only if the installation and use of the product is strictly in accordance with product instructions. There are no other warranties, express or implied, including the warranty of merchantability or fitness for a particular purpose. If the product does not comply with this limited warranty, Your sole and exclusive remedy is that We will, at our sole option and within a commercially reasonable time, either replace the product or product component without charge to You or refund the purchase price (less shipping). This limited warranty is not transferable.

Limitations on the Warranty

This limited warranty does not cover: (a) normal wear and tear; (b) damage through abuse, neglect, misuse, or as a result of any accident or in any other manner; (c) damage from misapplication, overloading, or improper installation; (d) improper maintenance and repair; and (e) product alteration in any manner by anyone other than Us, with the sole exception of alterations made pursuant to product instructions and in a workmanlike manner.

Obligations of Purchaser

You must retain Your product purchase receipt to verify date of purchase and that You are the original purchaser. To make a warranty claim, contact Us at 1-800-222-5381, identify the product by make and model number, and follow the claim instructions that will be provided. The product and the purchase receipt must be provided to Us in order to process Your warranty claim. Any returned product that is replaced or refunded by Us becomes our property. You will be responsible for return shipping costs or costs related to Your return visit to a retail store.

Remedy Limits

Product replacement or a refund of the purchase price is Your sole remedy under this limited warranty or any other warranty related to the product. We shall not be liable for: service or labor charges or damage to Your property incurred in removing or replacing the product; any damages, including, without limitation, damages to tangible personal property or personal injury, related to Your improper use, installation, or maintenance of the product or product component; or any indirect, incidental or consequential damages of any kind for any reason.

Assumption of Risk

You acknowledge and agree that any use of the product for any purpose other than the specified use(s) stated in the product instructions is at Your own risk.

Governing Law

This limited warranty gives You specific legal rights, and You also may have other rights which vary from state to state. Some states do not allow limitations or exclusions on implied warranties or incidental or consequential damages, so the above limitations may not apply to You. This limited warranty is governed by the laws of the State of Minnesota, without regard to rules pertaining to conflicts of law. The state courts located in Dakota County, Minnesota shall have exclusive jurisdiction for any disputes relating to this warranty.

Distributed by:

Northern Tool & Equipment Company, Inc.

Burnsville, Minnesota 55306

www.northerntool.com

Made in China