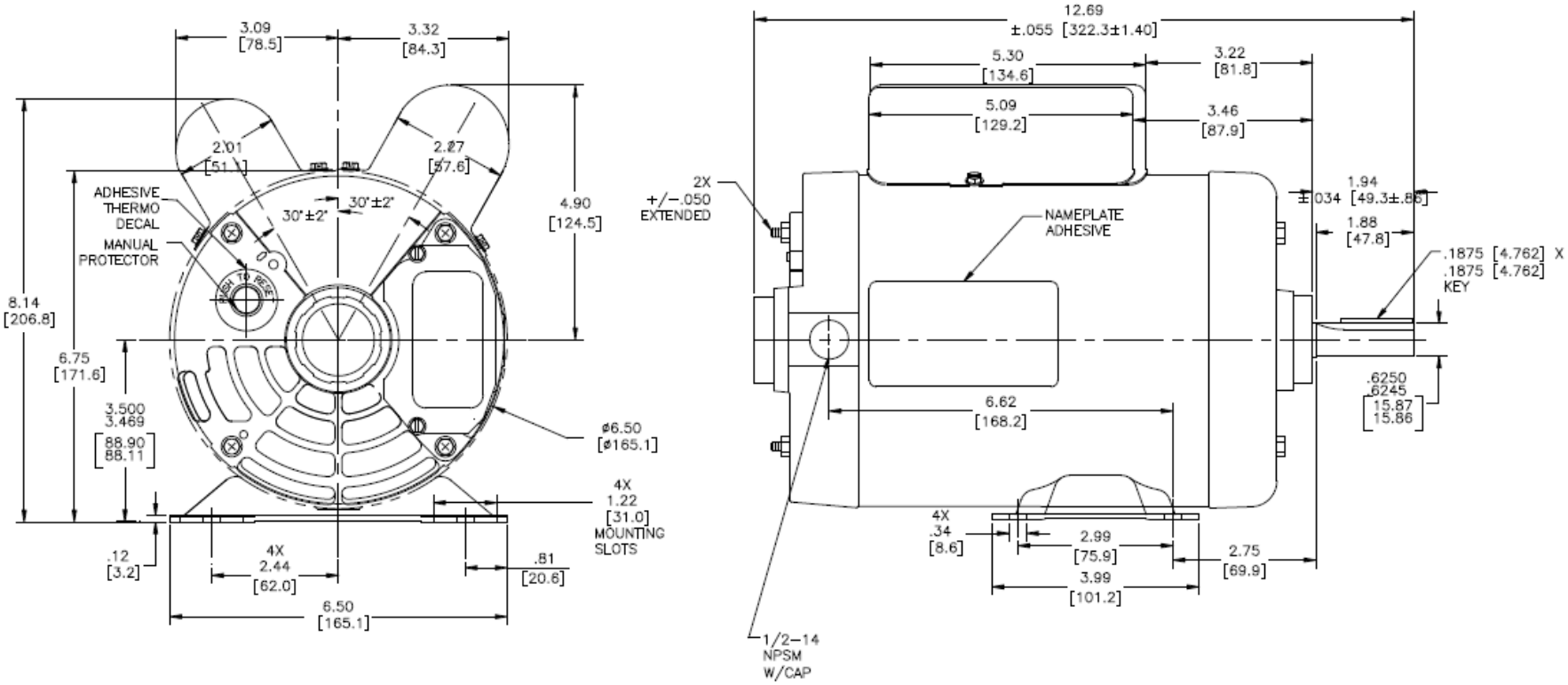

DRAWING REVISION	REVISION BY	DATE
B	T. REYES	10-21-2016
ECO	APPROVED BY	DATE
ECO-0111765	MEO	10-21-2016

ECO DESCRIPTION
CHANGED TO TITLE BLOCK W/IRONTON LOGO

COPYRIGHT NORTHERN TOOL VENDOR NO. 126 ALL RIGHTS RESERVED.
PROPRIETARY AND CONFIDENTIAL INFORMATION — THIS DOCUMENT IS THE PROPERTY OF NORTHERN TOOL VENDOR NO. 126 ("OWNER") AND CONTAINS OWNER'S PROPRIETARY INFORMATION. ANY PERSON, CORPORATION OR OTHER FIRM RECEIVING IT IS DEEMED, BY RECEIVING IT, TO AGREE THAT IT, AND/OR ANY PART OF IT, SHALL NOT BE DISCLOSED TO ANY PERSON, CORPORATION OR OTHER ENTITY, DUPLICATED, AND/OR USED, EXCEPT AS EXPRESSLY APPROVED IN WRITING IN ADVANCE BY OWNER. THIS DOCUMENT SHALL BE RETURNED TO OWNER UPON REQUEST. IT MAY BE SUBJECT TO CERTAIN RESTRICTIONS UNDER APPLICABLE EXPORT CONTROL LAWS AND REGULATIONS.

TOLERANCES UNLESS OTHERWISE SPECIFIED

DEC.	INCH	mm	ANGLE
.X	±0.1	[±2.5]	±0.5°
.XX	±0.02	[±0.51]	
.XXX	±0.005	[±0.127]	
.XXXX	±0.0005	[±0.0127]	

REMOVE BURRS & BREAK SHARP EDGES .003/.015 [.076/.381] X 45°
CORNER FILLETS R.02 [.51]
MACHINED SURFACES INCH 125/ mm 3.2/
mm SHOWN IN [BRACKETS]

DRAWN BY: M.RODARTE
DATE: 02-23-2016
APPROVED BY: M.RODARTE
DATE: 02-23-2016
REFERENCE
THIRD ANGLE PROJECTION

IRONTON

DESCRIPTION: MODEL-CFHP-56FR
OUTLINE

MATERIAL
PROCESS/FINISH

SIZE C | DWG NO 119574 | SHEET 1