12V FUEL TRANSFER PUMP OWNER'S MANUAL



WARNING: **Read carefully and understand all ASSEMBLY AND OPERATION INSTRUCTIONS before operating. Failure to follow the safety rules and other basic safety precautions may result in serious personal injury.**

Item # 37889

Thank you very much for choosing a Roughneck™ Product! For future reference, please complete the owner's record below:

Model: _____ Purchase Date: _____

Save the receipt, warranty and these instructions. It is important that you read the entire manual to become familiar with this product before you begin using it.

This machine is designed for certain applications only. The distributor cannot be responsible for issues arising from modification. We strongly recommend this machine is not modified and/or used for any application other than that for which it was designed. If you have any questions relative to a particular application, DO NOT use the machine until you have first contacted distributor to determine if it can or should be performed on the product.

For technical questions, please call **1-800-222-5381.**

WARNING: Read carefully and understand all INSTRUCTIONS before operating. Failure to follow the safety rules and other basic safety precautions may result in serious personal injury.
Save these instructions in a safe place and on hand so that they can be read when required.
Keep these instructions to assist in future servicing.

INTRODUCTION

These products are positive displacement gear pumps. Depending on installation and viscosity, these pumps can deliver up to 15 GPM (57 LPM). Their rugged design makes for a long life of dependability.

TECHNICAL SPECIFICATIONS

- Inlet: 2in. male on tank adapter, 1in. female on pump
- Outlet: 3/4in. female
- Built-in bypass valve.
- Furnished with:
  - 13ft. delivery rubber hose
  - 1-pc. steel suction pipe
  - 1-pc. aluminum manual nozzle.
  - 2in. quick-change coupling
- Electrical Specifications

Model	ELECTRICAL POWER		CURRENT	Flow Rate
	Current	Voltage	Maximum (Amp)	(GPM)
37889	DC	12	40	15 GPM

The above flow rate only indicates the flow rate for the outlet. Once connecting with the hose and nozzle, the flow rate may change.

Fluid compatibility

If in doubt about compatibility of a specific fluid, contact supplier of fluid to check for any adverse reactions to the wetted materials.

The pump is compatible with the following fluids:

- Diesel, Kerosene, Mineral spirits

Do not use the pump with the following fluids:

- Gasoline, Water, Sulfuric acid, Naphtha, Methanol, Methyl Ethyl ketone (MEK), Acetone, Ammonia, Benzene, Bleach, Chlorine.

WARNING: This product should not be used for fluid transfer into aircraft. This product is not suited for use with fluids for human consumption or fluids containing water.

OPERATING CONDITIONS

Temperature: Minimum -4°F (-20°C) / Maximum 140°F (60°C)
Relative Humidity: Maximum 90%

GENERAL SAFETY REGULATIONS

⚠ **WARNING: Read and understand all instructions.**

⚠ **WARNING: The warnings, cautions, and instructions discussed in this instruction manual cannot cover all possible conditions or situations that could occur.** It must be understood by the operator that common sense and caution are factors that cannot be built into this product, but must be supplied by the operator.

1. **Keep the work area clean and dry.** Damp or wet work areas can result in injury.
2. **Keep children away from work area.** Do not allow children to handle this product.
3. **Store idle equipment.** When not in use, tools and equipment should be stored in a dry location to inhibit rust. Always lock up tools and equipment, and keep out of reach of children.
4. **Use the right tool for the job.** Do not attempt to force small equipment to do the work of larger industrial equipment. There are certain applications for which this equipment was designed. It will do the job better and more safely at the capacity for which it was intended. Do not modify this equipment, and do not use this equipment for a purpose for which it was not intended.
5. **Check for damaged parts.** Before using this product, carefully check that it will operate properly and perform its intended function. Check for damaged parts and any other conditions that may affect the operation of this product. Replace damaged or worn parts immediately.
6. **Do not overreach.** Keep proper footing and balance at all times to prevent tripping, falling, back injury, etc.
7. **DO NOT use the equipment when tired or under the influence of drugs, alcohol, or medication.** A moment of inattention while operating this equipment may result in serious personal injury.
8. **Industrial applications must follow OSHA requirements.**

SPECIFIC OPERATION WARNINGS

To ensure safe and efficient operation, it is essential to read and follow each of these warnings and precautions.

1. DO NOT smoke near pump or use pump near an open flame. Fire could result.
2. Disconnect power to pump before servicing pump.
3. Turn off the switch before connecting power.
4. Take motors needing service to an authorized repair shop or return to factory to maintain.
5. A filter should be used on pump outlet to ensure that no foreign material is transferred to fuel tank.
6. Tank or barrel should be anchored to prevent tipping in both full and empty conditions.

⚠ WARNING:

1. Electrical wiring should be done by a licensed electrician in compliance with local codes. Rigid conduit should be used and proper ground must be provided to avoid the possibility of electrical shock. Failure to comply with this warning could result in serious injury and/or loss of property.
2. This product should not be used for fluid transfer into aircraft. This product is not suited for use with fluids for human consumption, or fluids containing water.
3. Extreme operating conditions with working cycles longer than 30 minutes can cause the motor temperature to rise, thus damaging the motor itself. Each 30-minute working cycle should always be followed by a 30-minute power-off cooling phase.

ROUGHNECK™
12V FUEL TRANSFER PUMP OWNER'S MANUAL

INSTALLATION

1. **Tightly screw suction pipe into inlet coupling of pumping unit.** Extend suction pipe into truck tank or barrel to within 3in. of tank bottom.
2. **Screw inlet coupling of pump into 2in. tank or barrel opening.** Inlet coupling must be completely and securely threaded into an undamaged tank or barrel bung.
3. **During installation and maintenance, make sure that the electric supply lines are not live.**
4. **Always turn off the switch before supplying electrical power.**
5. **Check the correct rotation direction of the DC pump.** If it is inverted, check the polarity of the connection cable.
   a) RED cable: positive pole (+)
   b) BLACK cable: negative pole (-)
6. **Systems should be designed to require a minimum amount of suction lift.** Maximum "equivalent feet of lift" is 8 feet for diesel fuel.
7. **Tank or barrel must be properly vented.** A water separator should be used for pumping diesel fuel.
8. **Power to the unit should be supplied from a dedicated 30 Amp circuit breaker.** No other equipment should be powered from this breaker. If two pumps are supplied from one breaker, that breaker must be capable of handing the load of both motors.
9. **Install bung adapter and suction pipe:**
   - Tighten the bung adapter snugly into the fuel tank
   - Place the union ring gasket into the inlet fitting on the bottom of the pump
   - Thread the suction pipe into the inlet fitting and tighten until snug. Install pump on tank
   - Clean the tank interior of all dirt and foreign material
   - Extend the suction pipe to its full length and insert into the tank opening
   - Place the pump on the bung adapter and tighten the union ring securely with a pipe wrench. Make sure the union ring is not cross-threaded
   - To prevent pressure buildup and possible fuel leaks through the muzzle, make sure the tank is vented a vent cap rated at 3 PSI or less is recommended
10. **Replace gears and drive key:**
    - Turn the pump OFF and disconnect from power
    - Remove the gear cover plate
    - Lift the diver key and gears from the pump
    - Inspect the gears and key for wear and damage. Replace as necessary
    - Wipe the gear cavity with a clean cloth
    - Replace the gears. Make sure they turn freely
    - Replace the drive key
    - Make sure the gear cover plate O-ring is securely in place. Tighten the cover plate to the housing
11. **To remove or replace the bypass poppet:**
    - As above, push down on the poppet until the O-ring is exposed
    - Remove the O-ring with a small screwdriver or similar tool. Take care not to damage the poppet or O-ring.
    - From inside the housing, use a small screwdriver to push the poppet and spring through the top outlet port
    - Wipe the poppet and gear cavities with a clean cloth
    - Replace the poppet, O-ring ,and spring as necessary
      Note: Replace O-ring if damaged, swollen, or loose fitting
12. **To clean or replace strainer:**
    - Turn the pump off and disconnect from power. Remove the strainer cover plate
    - Remove the inlet strainer and inspect for damage or clogs
    - Clean the strainer with a soft-bristled brush and solvent. If the strainer is very dirty, compressed air may be used. If damaged, replace the strainer
13. **Place the strainer in the cavity.** Clean the cover plate and O-ring, coat the O-ring lightly with grease. Ensure the cover plate O-ring is properly seated and tighten the strainer cover plate.

OPERATION INSTRUCTIONS

1. If using flexible tubing, attach the ends of the tubing to the tank(s). In the absence of an appropriate slot, solidly grasp the delivery tube before beginning dispensing.
2. Before starting the pump, make sure that the delivery valve is closed (dispensing nozzle or line valve).
3. Turn the ON/OFF switch to ON. The by-pass valve allows functioning with the delivery closed for only brief periods.
4. Open the delivery valve, solidly grasping the end of the tubing.
5. Close the delivery valve to stop dispensing.
6. When dispensing is finished, turn off the pump.

MAINTAINANCE

Under normal working conditions, the noise emission from all models does not exceed the value of 80dB at a distance of three feet from the electric pump.

Transportation

When the pump is in transit, do not expose the pump to direct sunlight and avoid rain, falling, corrosive substances, etc.

Storage

①. Store the pump in a dry place with good ventilation. Do not expose it to excessive heat, humidity or sunlight. Never let it touch any corrosive substances.

②. Store it out of the reach of children.

ROUGHNECK™ 12V FUEL TRANSFER PUMP OWNER'S MANUAL

TROUBLE SHOOTING

Problem	Possible Cause	Corrective Action
Motor does not run	1. Fuse blown	1. Open the terminal box, check the fuse, if blown, replace
	2. Switch defective	2. Remove switch cover plate and inspect switch. Replace if necessary
	3. Motor burned out	3. Replace motor as described in the repair section
	4. Switch or electrical connections faulty	4. Inspect for damaged motor protector, defective wiring or switch, or improper electrical connections. Replace as needed and reinstall
Motor runs but does not pump	1. Suction pipe clogged, damaged, or missing	1. Remove pump from tank, inspect suction pipe. Clean or replace as necessary
	2. Gear cover plate or o-ring damaged	2. Remove and inspect the cover plate and o-ring, replace, as necessary, refer to the repair section on servicing o-ring
	3. Strainer clogged or defective	3. Remove strainer cover plate, remove and clean strainer, install again
	4. Bypass poppet o-ring worn or missing	4. Inspect o-ring using instructions in the repair section. Replace, if necessary
	5. Bypass poppet o-ring dirty	5. Remove poppet assembly and clean poppet and cavity
	6. Bypass poppet binding or damaged	6. Using instructions in the repair section. Remove the bypass poppet, spring and o-ring. Clean cavity, inspect and replace components, as necessary
	7. System air leak	7. Tighten all pump fitting and connections. Inspect suction pipe for leaks or damage
	8. System air lock	8. This can occur if external filter, meters, or an off-the-shelf automatic nozzle is used. To correct, remove the pipe plug in the top outlet port and fill the gear cavity with fuel. Use of a factory –supplied automatic nozzle is recommended
	9. Poor connections or low voltage	9. Make sure electrical connections are secure. Also check battery voltage
	10. Fuel level low	10. Fill tank
	11. Motor running backwards due to incorrect polarity	11. Connect red wire to positive (+) ungrounded side of battery. Gear with key should turn counterclockwise
Low flow rate	1. Poor connections or low voltage	1. Make sure electrical connections are secure, also check battery voltage
	2. Strainer partially clogged	2. Remove the strainer cover plate. Remove and clean the strainer. Install again
	2. Strainer partially clogged	3. Remove pump from tank. Inspect suction pipe. Clean or replace, as necessary
	4. Fuel tank empty	4. Fill tank
	5. Using off-the-shelf automatic nozzle	5. Factory-supplied automatic nozzle is recommended
	6. System air leak	6. Tighten all pump fittings and connections. Inspect suction pipe for leaks or damage. Replace, as necessary
	7. Bypass poppet spring weak	7. Using instructions in the Repair Section, remove the bypass poppet and inspect spring, replace , if necessary
Motor stalls when operation in bypass mode	1. Motor protector activated	1. Turn off switch. Allow motor to cool, then turn on switch.
	2. Gears locked	2. Remove gear cover plate and inspect gears and drive key. Make sure gears turn freely with the key removed. Replace, if worn.
	3. Wiring defective	3. Use wiring instructions in the installation section to ensure proper connections
	4. Bypass poppet binding or damaged	4. Using instructions in the Repair section, remove the bypass poppet, spring, and o-ring. Clean cavity. Inspect components and replace, as necessary
	5. Motor defective	5. Replace motor as described in the repair section
Switch fails to operate motor	1. Switch or electrical connections faulty	1. Inspect for damaged motor protector, blown fuse, defective wiring or switch, or improper electrical connections. Replace as needed and re-install
	2. Motor burned out	2. Replace motor as described in the repair section
	3. Motor protector activated	3. Turn off switch. Allow motor to cool , then turn on switch
Rapid overheating of motor	1. Duty cycle too long	1. Pump operation should not exceed the standard duty cycle of 30minutes on, and 30minutes OFF. Allow the pump to cool for 30minutes.
	2. Strainer clogged,	2. Remove strainer cover plate. Remove and clean strainer. Install again.
	3. Suction pipe clogged or damaged	3. Remove pump form tank. Inspect suction pipe. Clean or replace, as necessary.
	4. Gears worn	4. Remove gear cover plate and inspect gears and drive key. Make sure gears turn freely with key removed. Replace, if necessary.
	5. Fuel level low	5. Fill tank
	6. Running too long in bypass mode	6. Limit bypass operation to 5 minutes.

DIAGRAMS AND PARTS LIST

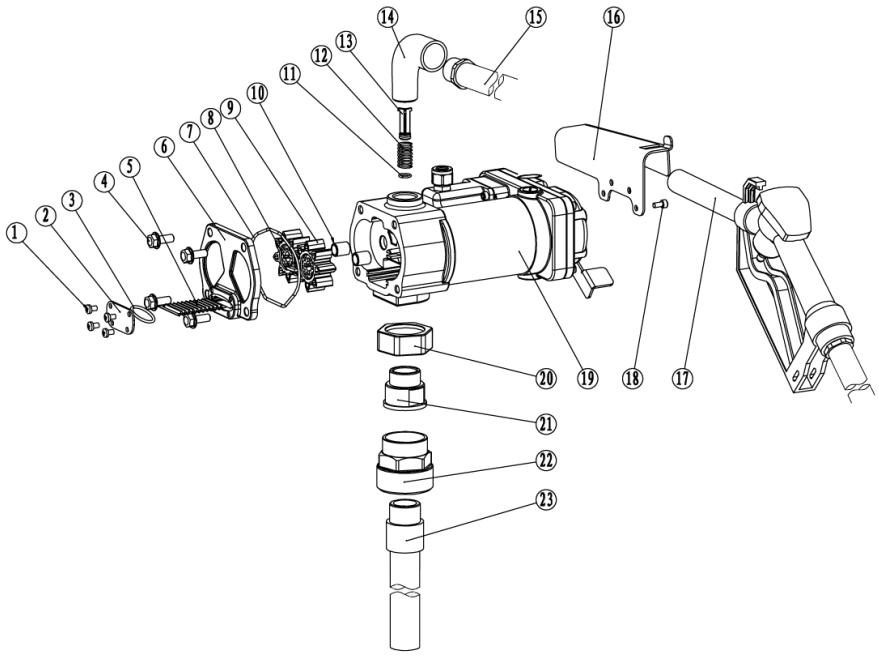

Part No.	Description	Q'ty	Part No.	Description	Q'ty
1	Screw M6×10	4	13	Bypass Poppet	1
2	Strainer Cover	1	14	Elbows	1
3	O-ring	1	15	Hoses	1
4	Hexagon Flange Bolts M6x20	4	16	Nozzle Cover	2
5	Strainer	1	17	1in. Manual Nozzle	1
6	Pump Cover	1	18	Hex Bolts M6x10	2
7	Seal	1	19	Motor	1
8	Key	1	20	Nut	1
9	Gear	1	21	Adapter	1
10	Axle Bush	1	22	Tank Adapter	1
11	O-ring	1	23	Suction Pipe	1
12	Spring	1			

For replacement parts and technical questions, please call **1-800-222-5381.**

ROUGHNECK™
12V FUEL TRANSFER PUMP OWNER'S MANUAL

WARRANTY
One-year limited warranty

ROUGHNECK™

Distributed by
Northern Tool + Equipment Co., Inc.
Burnsville, MN 55306
NorthernTool.com
Made in China