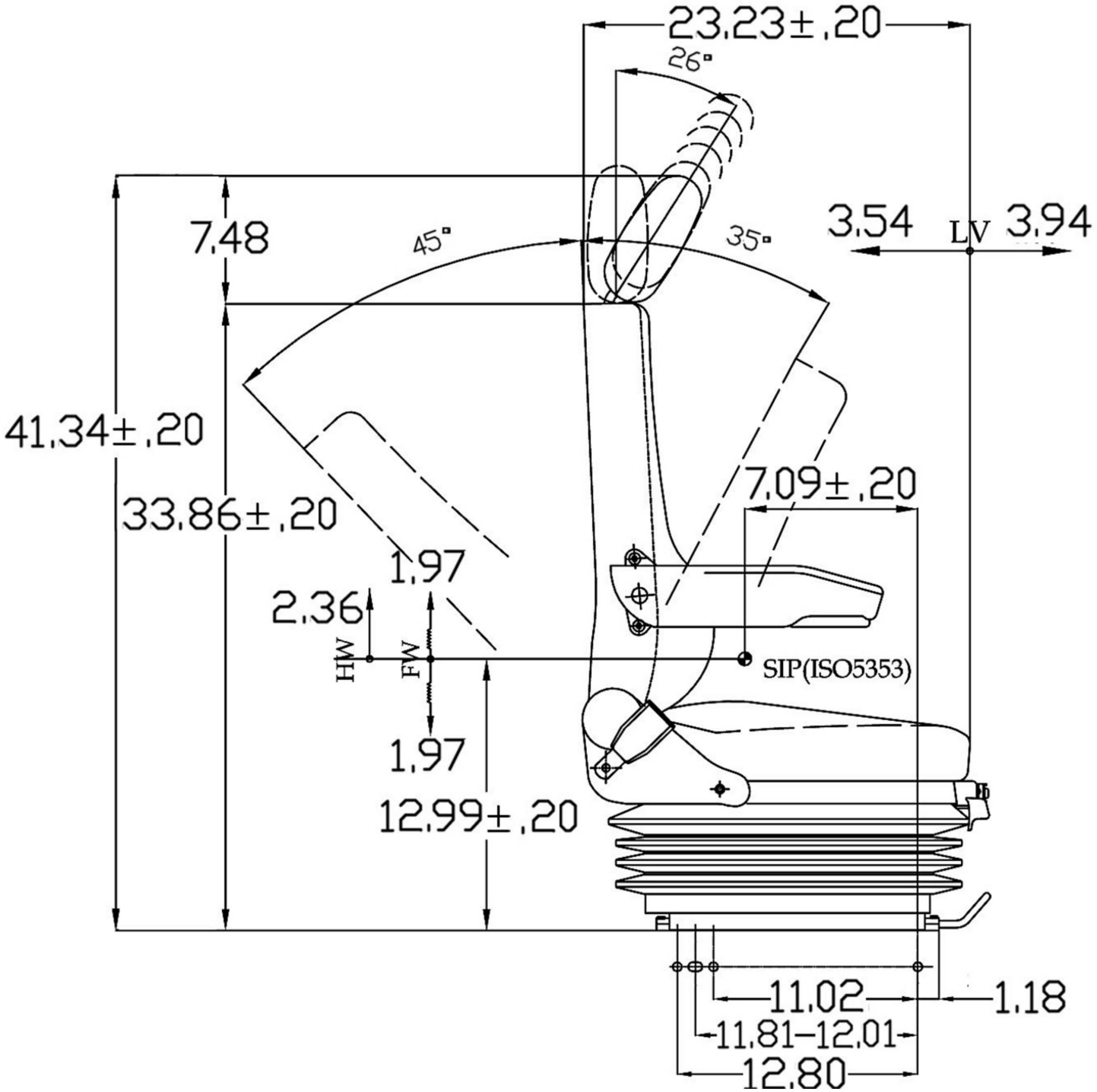
23.23±.20
26°
7.48
45°
35°
3.54
LV
3.94
41.34±.20
33.86±.20
7.09±.20
1.97
2.36
HW
FW
SIP(ISO5353)
1.97
12.99±.20
11.02
1.18
11.81–12.01
12.80