POWERHORSE®

Owner's Manual

M1577110E

ITEM NUMBER: 1577110, 15771120
SERIAL NUMBER: _____

Pressure Washer: Machine that cleans dirty surfaces with high pressure water
Instructions for Installation/Set-up, Operation, Maintenance, & Storage

This pressure washer produces cold water high pressure spray. Cleaning chemicals may be incorporated into the spray if desired. The pressure pump for this equipment is powered by a gasoline internal combustion engine.

⚠ WARNING: SPECIAL HAZARDS

- **CO Poisoning:** Exhaust from engine contains carbon monoxide, a poisonous gas that can cause carbon monoxide poisoning and possible death if inhaled.
- **Injection Injury**: High-pressure spray can pierce skin and underlying tissues, leading to serious injury and possible amputation. Such an injection injury can result in blood poisoning and/or severe tissue damage.
- **Flying Debris**: High-pressure spray can cause flying debris and possible surface damage.
- **Electric shock**: Operating equipment in wet conditions or near water can cause electric shock.
- **Chemical Exposure:** Cleaning chemical vapors or contact with skin may be hazardous.
- **Fire/Explosion:** Engine sparking can ignite fuel or other flammable liquids or vapors in the vicinity. Hot exhaust from engine can ignite combustible materials.
- **Burns**: Pressure Washer pump and engine are hot surfaces that can cause burn injuries.

Detailed safety information about these hazards appears throughout this manual.

Equipment Protection Quick Facts

Inspect Upon Delivery: FIRST! Inspect for missing or damaged components. See *"Initial Set-Up/Installation"* section for where to report missing or damaged parts.

Add Engine Oil: Engine is shipped **without oil**. See the "Engine Manual" section of this manual for instructions on capacity and viscosity recommendations.
Replace Temporary Pump Oil Plug: Pump is shipped **with** oil but with temporary shipping plug. Check pump oil level before starting and replace temporary shipping plug with permanent oil fill plug provided within plastic bag containing this Owners's Manual.
Water Flow Requirements: Make sure your supply water flow rate is 20% higher than the pressure washer's flow rate (see "Operations", section for detail), and that your water is clean and particle free.
Chemical Spraying: Use only approved pressure washer chemicals designed for high-pressure use. Use soap adjustment knob to regulate cleaning power (on select units).
Storage: Do not allow water to freeze in the pump, hose, or spray gun(s). See "Storage" for more information.
Maintenance Schedule: Engine and pump require periodic inspection and servicing to keep pressure washer functioning efficiently. See "*Maintenance Schedule Summary*" for frequency of servicing.
Battery: A battery is required for electric start feature (15771120 only). A battery is not included. Purchase a standard 12 VDC, 10 Ah battery. Further detail in "Specifications" section.

Any Questions, Comments, Problems, or Parts Orders
Call Powerhorse Product Support 1-866-443-2576

Table of Contents

Equipment Protection Quick Facts 1

TABLE OF CONTENTS 2

ABOUT YOUR PRESSURE WASHER 4

SPECIFICATIONS 5

COMPONENT IDENTIFICATION 6

SAFETY 7
- Hazard Signal Word Definitions 7

SAFETY LABELING 8
- Safety Decal Locations 8
- Safety Decals 9

INITIAL SET-UP 10
- **Step 1. Inspect & Unpack** 10
- **Step 2. Assembly** 12
  - Base Assembly 12
- **Step 3. Select Suitable Location** 15
  - Moving and Handling 15
  - Outdoor Use Only 15
  - Install Spark Arrestor (if Required) 16

OPERATION 17
- **Follow Safety Rules for Operation** 17
- **Preparing for Operation** 18
  - Check/Add Oil to Pump 18
  - Check/Add Engine Oil 19
  - Inspect Fuel System/Check for Leaks 20
- **Connect Hoses, Water Supply, and Spray Nozzle** 20
- **Prime the Water Supply** 22
- **Set Up for Chemical Spray (if desired)** 22
- **Start-Up Procedures** 23
  - Start the Engine to Power the Pump. 23
  - Apply Cleaning Chemical (If Desired) 23
  - Begin High Pressure Spray 24
- **Shutdown** 25

STORAGE 26
- **Between-Use Storage** 26
- **Prepare Pressure Washer for Freezing Conditions** 26
- **Prepare Engine for Long Term Storage** 27
- **Prepare Pressure Washer for Storage** 27

MAINTENANCE & REPAIR 28

MAINTENANCE SCHEDULE SUMMARY 28

DETAILED INSTRUCTIONS – MAINTENANCE & REPAIR 28
- Follow Safety Rules 28
- Keep Pressure Washer Clean 28
- Inspect Spray System 29

Do not start pressure washer until all needed repairs have been completed. 29
Check Tire Pressure 29
Change Pump Oil 30
TROUBLESHOOTING 31
PARTS EXPLOSION- MODELS 1577110, 15771120- REV E 32
PARTS LIST-MODELS 1577110, 15771120- REV E 33
PUMP EXPLODED VIEW- REV E 34
PUMP PARTS LIST- REV E 35
KIT PARTS LIST-REV E 36
ENGINE EXPLODED VIEW (1577110)-REV E 37
ENGINE PARTS LIST (1577110)-REV E 38
ENGINE KIT PARTS LIST (1577110)-REV E 39
ENGINE EXPLODED VIEW (15771120)-REV E 40
ENGINE PARTS LIST (15771120)-REV E 41
ENGINE KIT PART LIST (15771120)-REV E 42
ENGINE MANUAL 43
Safety 43
Safety Precautions 44
Parts Descriptions 45
Battery Connection (Electric-Star Type) 46
Pre-Operation Inspection 47
Pre-Operation Inspection (cont'd) 48
Starting the Engine 49
Stopping the Engine 50
Exhaust Control System 50
Exhaust Control System (cont'd) 51
Maintenance 51
Maintenance (cont'd) 52
Maintenance (cont'd) 53
Maintenance (cont'd) 54
Transport, Storage, and Removal from Storage 55
Transport, Storage, and Removal from Storage (cont'd) 56
Engine Specifications 56
Troubleshooting 57
Wiring Diagram 58
LIMITED WARRANTY 59

About Your Pressure Washer

Thank you for purchasing a Powerhorse Pressure Washer! It is designed for long life, dependability, and top performance.

Intended Use. Produce a high-pressure water spray. Incorporate cleaning chemicals into a low-pressure water spray.

Note: Do not use for other purposes, as unforeseen hazards or equipment damage may result.

Power Source. The pressure washer is powered by a gasoline engine.

Supplies Required. Normal operation will require you to supply:

- Pressure Washer pump oil
- Gasoline
- Engine oil
- Personal Protection Equipment

See "*Specifications*" section of this manual for more detail.

Site Location. Intended for outdoor use only.

Personal Protection. Wear safety apparel during operation, including safety glasses with side and top protection. Ear protection is also recommended if working near any operating engine. Other safety apparel includes waterproof insulated gloves, and non-slip protective footwear. Cleaning chemicals may require the use of respiration mask; refer to chemical label for further instruction.

Adult control only. Only trained adults should set up and operate the pressure washer. Do not let children operate.

Under The Influence. Never operate, or let anyone else operate, the pressure washer while fatigued or under the influence of alcohol, drugs, or medication.

Keep this manual for reference and review.

ATTENTION: Rental Companies and Private Owners who loan this equipment to others!

All persons to whom you rent/loan this pressure washer to must have access to and read this manual. Keep this owner's manual with the pressure washer at all times and advise all persons who will operate the machine to read it. You must also provide personal instruction on how to safely set-up and operate the pressure washer and remain available to answer any questions a renter/borrower might have. Owner's Manuals are available from Powerhorse at 1-866-443-2576

Specifications

MODEL		
Model #	1577110	15771120
FLOW OUTPUT		
PSI (bar)	3000 (207)	3000 (207)
GPM (l/min)	2.5 (9.4)	2.5 (9.4)
Max Water Temp	140°F (60°C)	140°F (60°C)
ENGINE		
Engine	Powerhorse	Powerhorse w/ Electric Start
Horsepower	208CC	208CC
DIMENSIONS / COMPONENTS		
Length	27.5”	27.5”
Width	23”	23”
Height	38.5”	38.5”
Weight	75lbs	80lbs
Pump Oil Capacity	4 oz.	4 oz.
SUPPLIES REQUIRED (not included)		
Engine Oil	Refer to the “Engine Manual” section	Refer to the “Engine Manual” section
Pump Oil (shipped with oil, but refills required)	SAE 30 non-detergent pump oil (#35605)	SAE 30 non-detergent pump oil (#35605)
Battery	N/A	12 Volt 10 Ah Max Dimensions: 6-1/8” x 3-1/2 x 4-7/16”

Component Identification

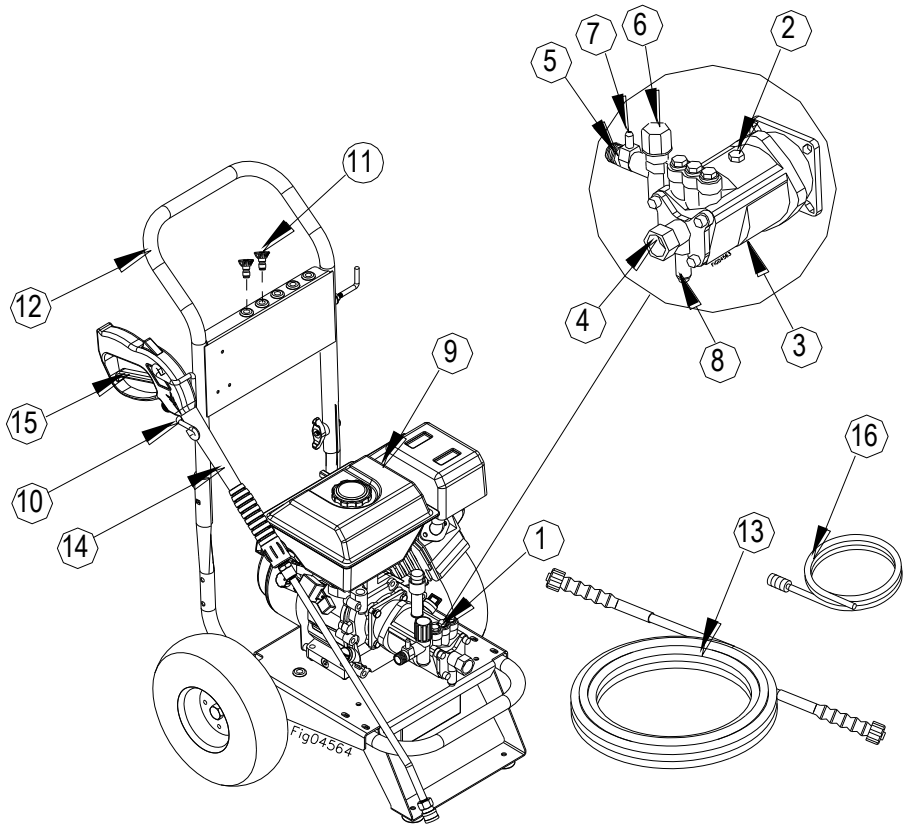

1. **Pressure Washer Pump:** Inspect for loose/broken parts prior to each use.
2. **Pump Oil Fill:** Add pump oil here. Replace shipping plug with vented dipstick.
3. **Pump Oil Drain:** Drain pump oil from here.
4. **Pump (Water) Inlet:** Attach garden hose here.
5. **Pump (Water) Outlet.** Connect high pressure hose here.
6. **Pressure Adjustment (Unloader):** Valve that regulates pressure and directs flow into bypass when trigger is closed.
7. **Chemical Injector:** Push chemical hose onto injector to route chemical from chemical bucket into pump.
8. **Thermal Protector:** Valve that regulates water temp in the pump
9. **Engine:** The air-cooled engine powers the pump.
10. **Gun Holder:** Store gun here.
11. **Nozzles:** Change nozzles for different spray patterns.
12. **Handle:** Designed for easy cart movement.
13. **Hose:** Attach couplers to gun and water outlet.
14. **Spray Gun:** Source of pressurized water, use two hands for safe operation.
15. **Trigger:** Pull to allow pressurized water to flow out of spray gun.
16. **Chemical Hose:** Submerge in cleaning solution.

See "*Parts Explosion*" for more details

Safety

Hazard Signal Word Definitions

This is the safety alert symbol. It is used to alert you to potential personal injury hazards. Obey all safety messages that follow this symbol to avoid possible injury or death.

DANGER

DANGER (red) indicates a hazardous situation, which if not avoided, will result in death or serious injury.

WARNING

WARNING (orange) indicates a hazardous situation, which if not avoided, could result in death or serious injury.

CAUTION

CAUTION (yellow), used with the safety alert symbol, indicates a hazardous situation, which if not avoided, could result in minor or moderate injury.

CAUTION

CAUTION (yellow), without the safety alert symbol, is used to address practices not related to personal injury.

NOTICE

NOTICE is used to address practices not related to personal injury.

Safety Labeling

Safety Decal Locations

⚠ WARNING:

ALWAYS make sure safety labels are in place and in good condition. If a safety label is missing or not legible, order new labels from Powerhorse Product Support at 1-866-443-2576

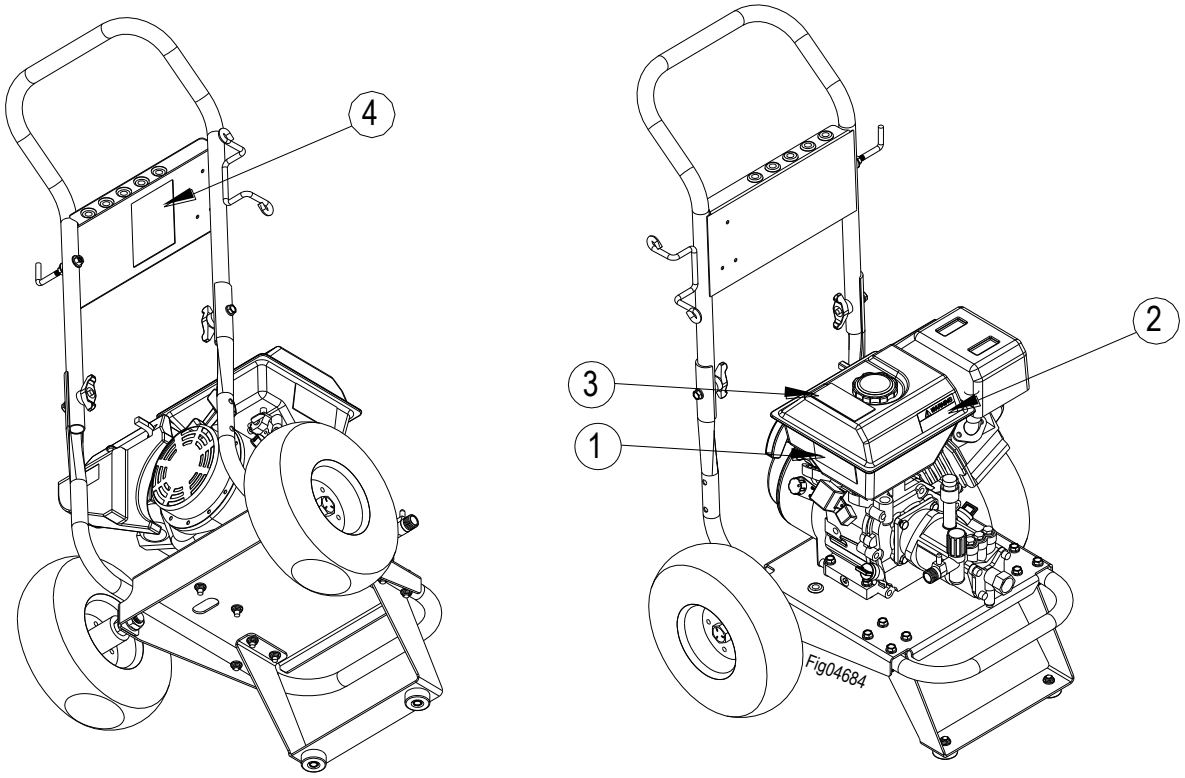

On-Product Warning Labels		
Location	**Part numbers**	**Description**
1	788935	Fuel Fire Explosion
2	788936	Burn Hazard
3	788937	Poisonous Gas
4	789002	Warnings

Safety Decals

1

2

3

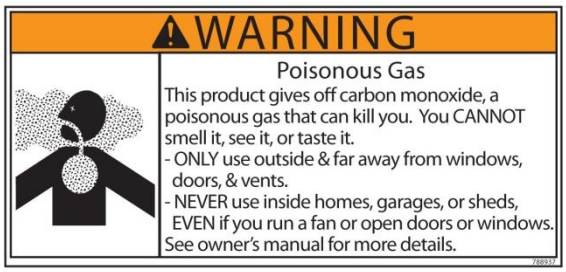

4

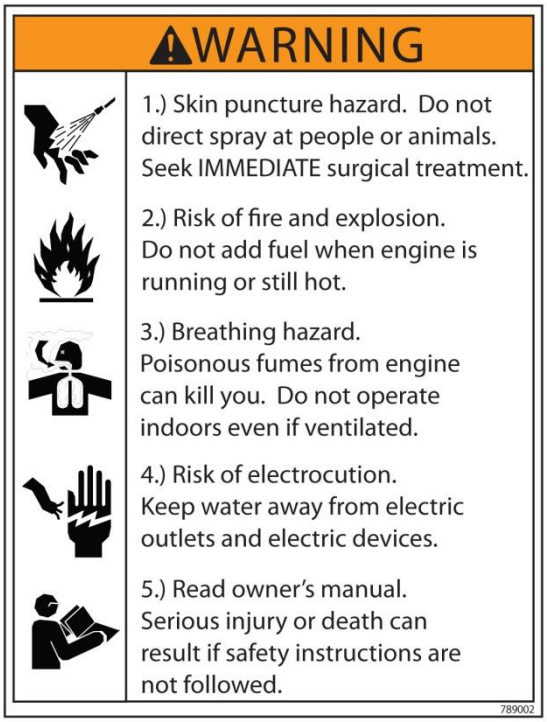

To order replacement safety labels, call Powerhorse Product Support at 1-866-443-2576

Initial Set-Up

Step 1. Inspect & Unpack

Upon receiving your item check for missing or damaged parts.

See *"Component Identification"* section of this manual for a diagram of the pressure washer and its components.

- For missing or damaged components, please contact Product Support at 1-800-270-0810.
- If complete, fill out product serial number information. See *"Limited Warranty"* section of this manual.

Hardware Bag

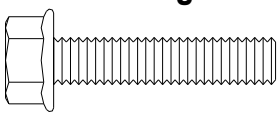

5/16 x 1 1/2" Bolt
Qty-10
Part# 82017

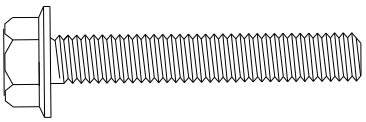

5/16 x 2" Bolt
(15771120) Qty-4
Part# 82018

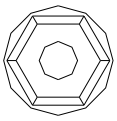

5/16" Nut
Qty-18
Part# 82019

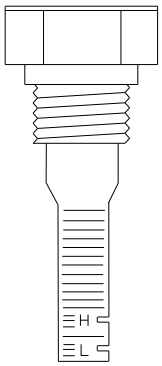

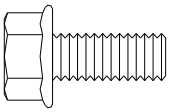

5/16" x 3/4" Bolt
(1577110) Qty-6
(15771120) Qty-2
Part# 82015

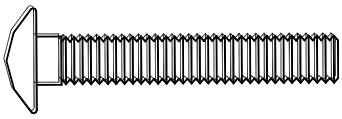

5/16" x 2" Carriage Bolt
Qty-2
Part# 82233

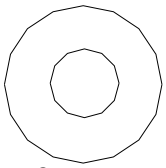

Grommet
(1577110) Qty-5
(15771120) Qty-6
Part# 35198

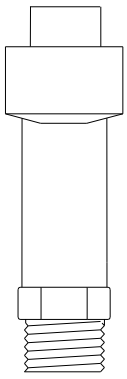

Breather Plug Tube with Dipstick
Qty-1
Part# 785819

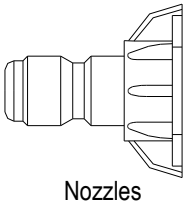

Nozzles
Qty-2
Part# 781025

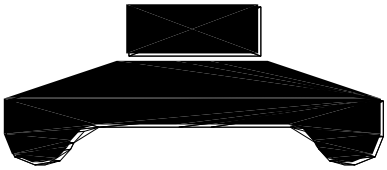

T-Handle Knobs
Qty-2
Part# 38578

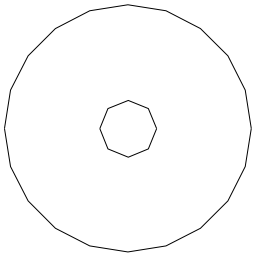

Rubber Foot
Qty-2
Part# 2215

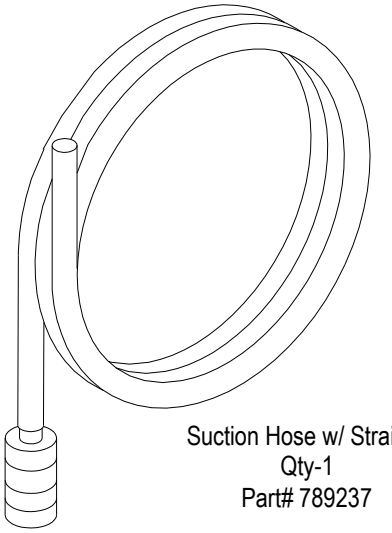

Suction Hose w/ Strainer
Qty-1
Part# 789237

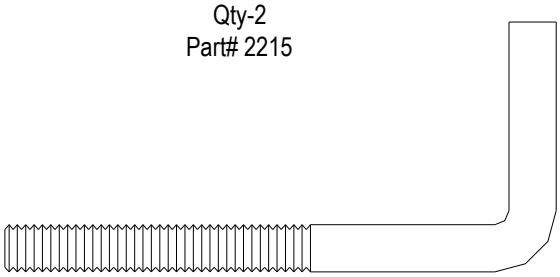

Hook
Qty-1
Part# 38509

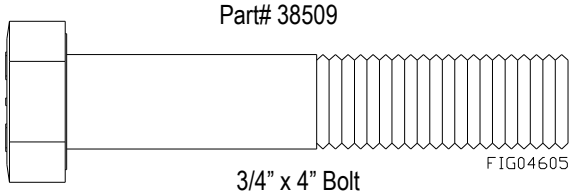

3/4" x 4" Bolt
Qty-2
Part# 82230

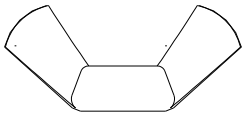

5/16" Wing Nut
(15771120) Qty-4
Part# 777450

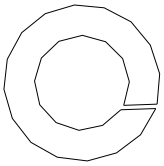

3/4" Lock Washer
Qty-2
Part# 82041

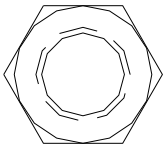

3/4" Thick Nut
Qty-2
Part# 82040

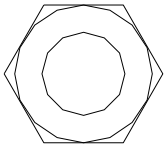

3/4" Thin Nut
Qty-2
Part# 82476

Step 2. Assembly

Note: Remove contents from pallet and assembly can occur at this time

Base Assembly

1. Bolt pressure washer frame to the engine base using:
   - (6) 5/16-18 x 1-1/2” HHSF Flange Bolts (82017)
   - (6) 5/16-18 Flange Nut (82019)

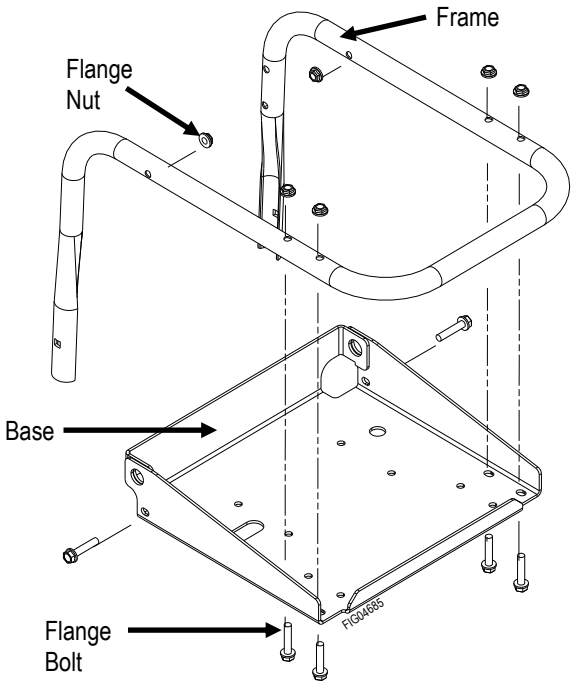

2. Attach the leg to the pressure washer base using:
   For Model# 1577110
   - (4) 5/16-18 x 3/4” HHSF Flange Bolts (82015)
   - (4) 5/16-18 Flange Nut (82019)

   For Model # 15771120
   - (4) 5/16-18 x 2” HHSF Flange Bolts (82018)
   - (4) 5/16-18 Flange Nut (82019)

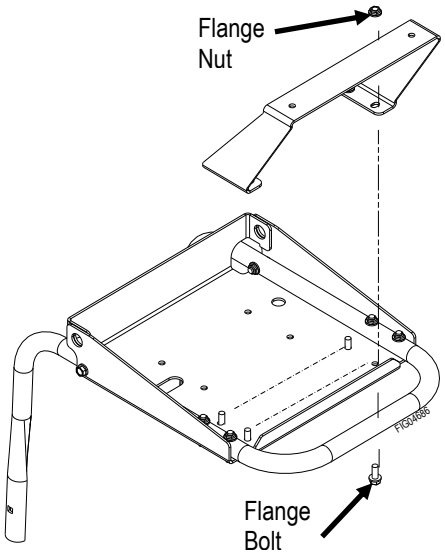

3. Bolt the rubber bumpers (feet) to the leg of the pressure washer cart using:
   - (2) 5/16-18 x ¾” HHSF Flange Bolts (82015)
   - (2) 5/16-18 Flange Nut (82019)

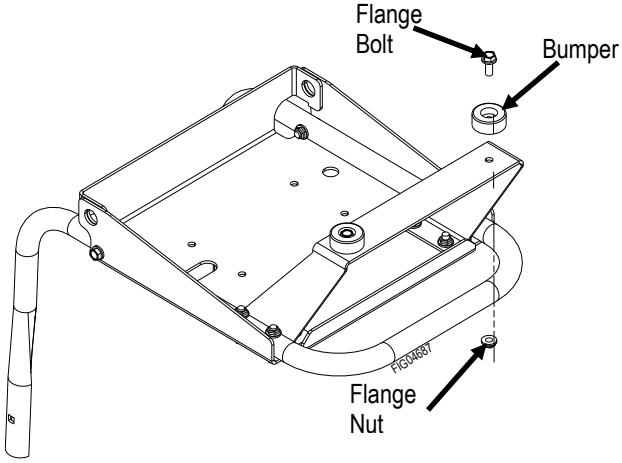

Wheel to Base Assembly

4. Install wheels on the pressure washer base using:
   - (2) 3/4 x 4” Bolts (82230)
   - (2) 3/4-10 Thin Nut
   - (2) 3/4” Thick Nut (82040)
   - (2) 3/4” Lock Washers (82041)

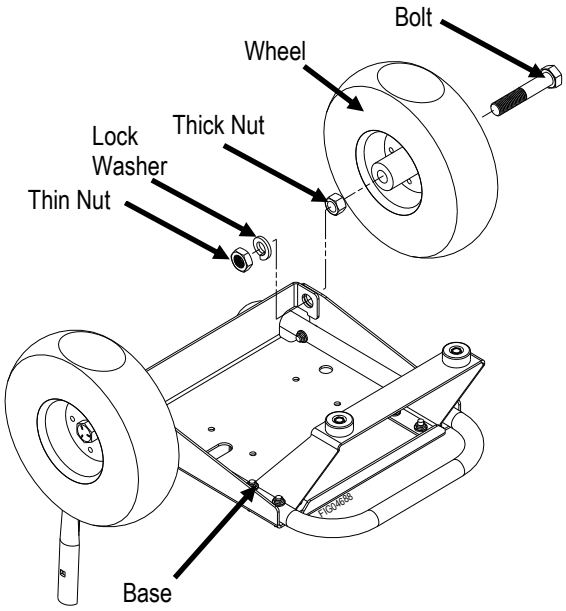

Repeat the process as pictured to install the wheel on opposite side.

Check that wheels turn freely.

After completing this step the pressure washer cart assembly may now be placed right side up, ensuring that the wheels and leg are on a flat surface.

Handle to Base Assembly

5. Bolt the pressure washer handle on to cart assembly using:
   - (2) 5/16-18 x 2” Carriage Bolt (82233)
   - (2) T-Handle Knobs (38578)

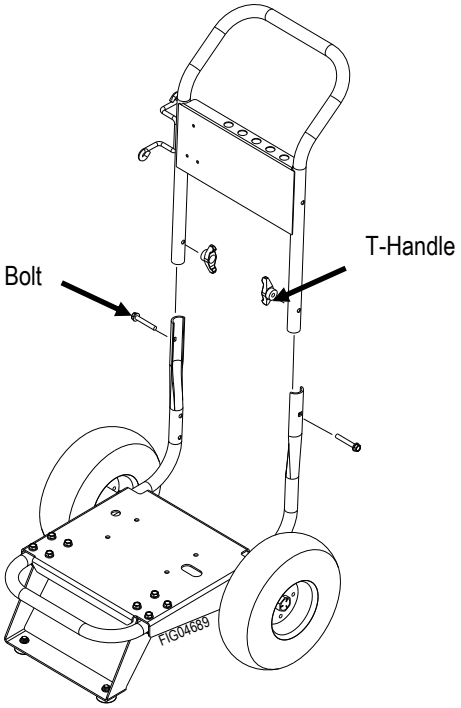

6. Install the hose hook and nozzle grommets using:
   - (1) Threaded Hose Hook (38509)
   - (2) 5/16-18 Flange Nut (82019)

   For Model# 1577110
   - (5) 7/16 Grommet (35198)

   For Model # 15771120
   - (6) 7/16 Grommet (35198)

   *Only on Model# 15771120

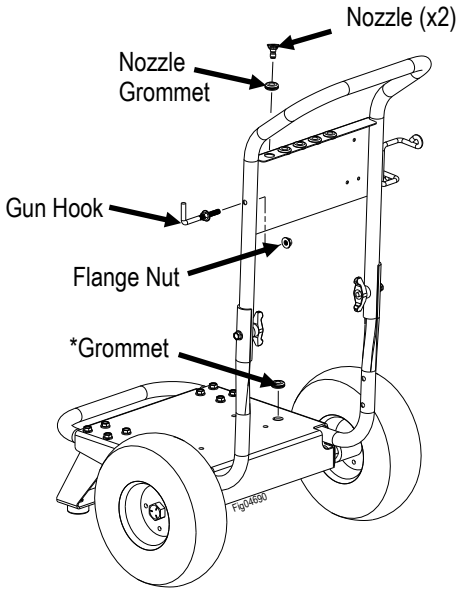

Mounting Engine to Base

7. Mount engine to cart assembly using:
   - (1) Engine & Pump (789599)
   - (4) /16-18 Flange Nut (82019)
   - (4) 5/16-18 X 1 1/2” Flange Bolts (82017)

   Insert flange bolt from underneath base of the cart. Tighten flange nuts to the bolts fastening engine to cart.

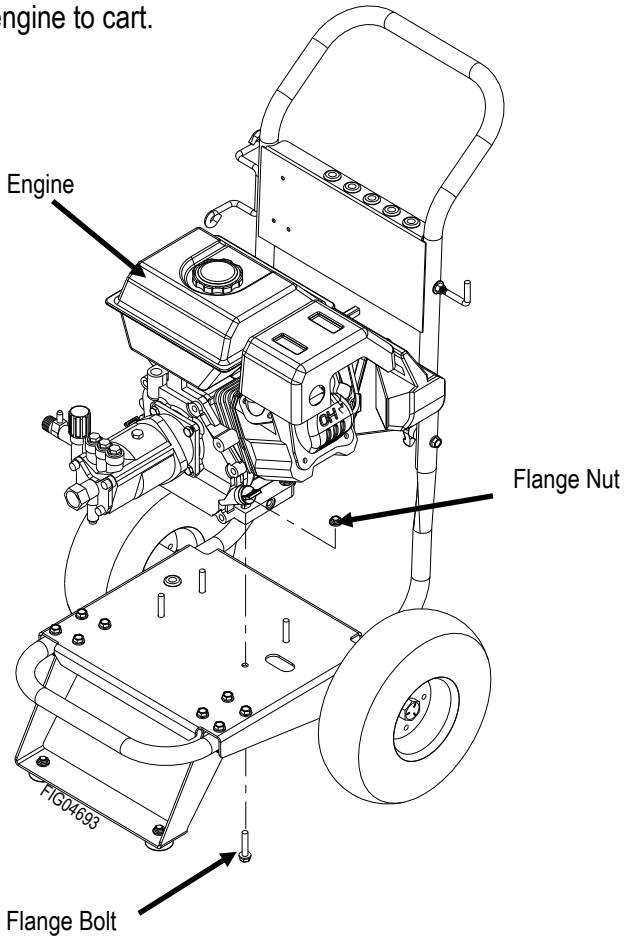

Replace Shipping Plug with Dipstick

8. Remove shipping plug from the pump and replace with the supplied dipstick.
9. Attach chemical hose to Pump by pushing onto chemical injector barb.

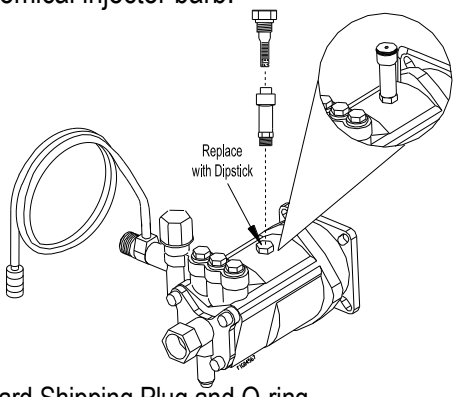

Note: Discard Shipping Plug and O-ring.

Battery Installation (15771120 only)

10. Route cable as shown. *Note: Ignition switch and starter removed for clarity.*

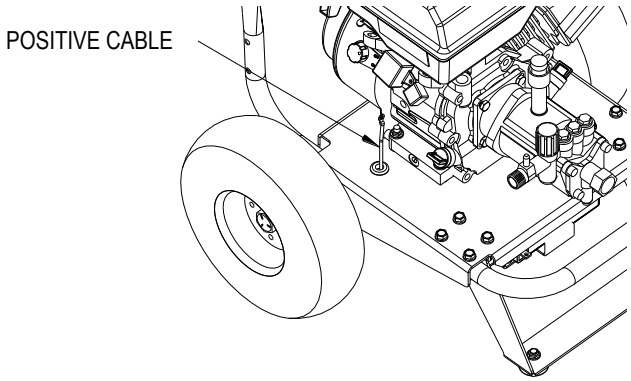

A.) Note: a battery is not required for pressure washer operation. If a battery is not installed, care must be taken to prevent the Positive Battery Cable from contacting the steel pressure washer frame.

B.) Install a 12-volt battery with a minimum of 10 amp hour rating and max dimensions of 6-1/8" x 3-1/2 x 4-7/16".

- The battery is to be supplied by the customer.
- (2) 1/4" nuts and (2) 1/4" bolts to be supplied by customer.

C.) Follow the steps below for connecting and disconnecting the battery:

⚠ WARNING: Battery Hazards

Batteries are hazardous because they contain caustic acid, can emit explosive gases, and can cause electric shock. Caution must be exercised when making connections to a battery to avoid shock and contact with the acid, and to prevent any sparking that could lead to an explosion. ALWAYS follow the general battery safety rules and instructions.

General Battery Safety Rules

- ALWAYS use eye protection and protective clothing when handling batteries.
- NEVER smoke or work near sparks or other sources of ignition.
- NEVER touch both battery terminals at the same time with your hand or any non-insulated tools.

If battery acid contacts skin or clothing, flush immediately with water and neutralize with baking soda.

11. **Connecting the Battery**
    Always connect the cables in the following sequence to avoid possible shock:
    a. Connect the ***red*** cable to the ***positive*** **(+)** terminal of the battery.
    b. Then connect the ***black*** cable to the ***negative*** **(-)** terminal of the battery.

Disconnecting the Battery

Always disconnect cables in the following sequence to avoid possible shock.

a. Remove the battery from the battery bracket.
b. First, disconnect the ***black*** cable from the ***negative*** **(-)** terminal of the battery.
c. Next, disconnect the ***red*** cable from the ***positive*** **(+)** terminal of the battery.
d. Reinstall the battery strap.

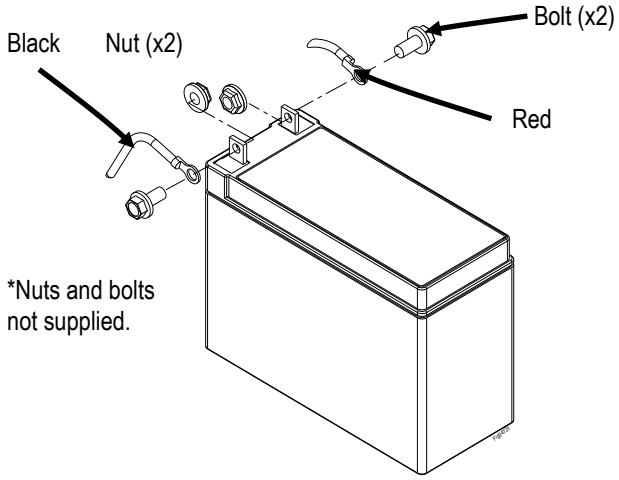

12. (Model# 15771120 Only) Install battery and battery bracket using:
    - (1) Battery, Customer to Purchase Separately
    - (1) Battery Bracket (788911)
    - (4) 5/16-18 Wing Nuts (777450)

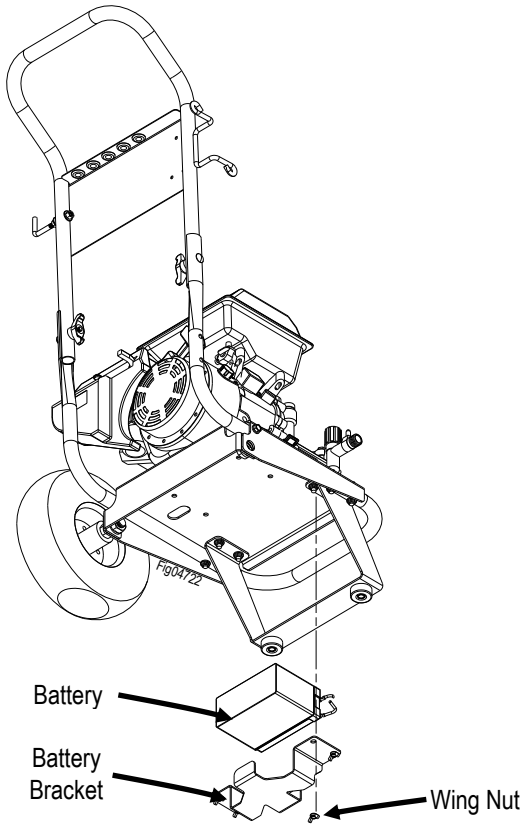

⚠ WARNING: High Pressure Fluid Injection Hazard

High-pressure fluid discharge from leaks (even pin-sized) or ruptured components can pierce skin and inject fluid into the body. Injection injury can result in blood poisoning and/or severe tissue damage leading to infection, gangrene, and possibly amputation.

- Never use a finger or skin to check for leaks.
- Never operate machine with damaged or missing hoses/parts.
- Never attempt to repair a high-pressure hose or component – Always replace it with a part that is rated at or above the pressure rating of this machine.

Step 3. Select Suitable Location

Moving and Handling

Moving your pressure washer around

- Use the handles to manually move the pressure washer.
- Push the pressure washer in front of you has you walk.
- To turn, push down slightly on the handles and pivot the pressure washer on its wheels.

Elevating or lowering your pressure washer

- To reduce risk of injury, it is recommended that two adults lift the pressure washer.
- Only lift the pressure washer by the bumper and handle. Do not use the pump or engine as a lifting point.

⚠ WARNING: Lifting hazard

The pressures washer is heavy. It can crush and cause serious injury if it rolls out of control or tips over. Follow the instructions below for safely moving the pressure washer.

Outdoor Use Only

1. Never run the pressure washer in an enclosed or partially enclosed location such as a building, garage, barn, shed, or house. These spaces can trap poisonous gases. Running a fan or opening windows will not provide adequate ventilation to prevent dangerous CO build-up.
2. Only use the pressure washer outdoors and far away from open windows, doors, and building or vehicle vents.
3. Place the pressure washer so that the exhaust fumes will not be directed towards people or building air intakes.
4. Do not locate and use the pressure washer in the presence of flammable vapors, dust, gases, or other potentially combustible materials.
5. Ensure that working, battery-operated or battery back-up carbon monoxide alarms are used in any dwelling/structure that is in close proximity to the running pressure washer.
6. Note that this pressure washer is NOT designed or approved for use in vehicles or marine applications. Never run the pressure washer inside RVs or other vehicles, on boats, or on pick-up truck beds.

Positioning:

1. The pressure washer should be positioned on a firm, level (less than 3 degree slope), heat-resistant surface with good drainage and a nearby water supply.
2. The pressure washer should be placed within garden hose distance of a continuous water supply. Ensure that the pressure washer sits level and will not slide or shift during operation. If applicable, block the pressure washer's wheels to prevent movement.
3. Situate so there is adequate pulling room for starting the engine using the recoil starter. Attempting to pull at an odd angle could rip off grip cord and/or cause muscular injuries to the operator.

Airflow:

1. Situate so there is adequate clearance around pressure washer to allow for airflow – at least 7 feet from any non-combustible wall or obstruction.
2. Do not operate with a tarp, blanket, or cover surrounding the machine.
3. Do not place any objects against or on top of the unit.
4. The pressure washer needs adequate, unobstructed flow of air to allow for proper combustion and adequate cooling. Proper combustion can only be obtained when there is a sufficient supply of oxygen available for the amount of fuel being burned. Cooling ventilation is required to prevent overheating of the pressure washer and possible fire.

Exhaust:

⚠ WARNING: Exhaust Modification hazard

Never attempt to attach ductwork to the muffler system to allow for installation inside an enclosure. This could cause heat build-up and increased exhaust back-pressure, resulting in possible exhaust leakage or damage to the pressure washer.

1. The exhaust gas from your pressure washer is extremely hot and can cause combustible materials to catch on fire.
2. Make sure the engine is at least 7 feet from all combustible materials and buildings/structures during operation.
3. Keep a fire extinguisher rated "ABC" nearby. Keep it properly charged and be familiar with its use.
4. Place the unit so that the exhaust fumes will not be directed towards people or building air intakes.

⚠ DANGER: Carbon monoxide hazard

Exhaust fumes from the engine contain carbon monoxide (CO), a poisonous gas you cannot see, smell, or taste. The CO generated by the engine can rapidly accumulate, even in areas that appear to be well ventilated, resulting in dangerous and fatal concentrations within minutes. NEVER run pressure washer inside any enclosed or semi-enclosed spaces, including homes, garages, basements, sheds, boxes, pick-up truck beds, RVs, or boats. These spaces can trap poisonous gases, EVEN if you run a fan or open windows. If you start to feel sick, dizzy, or weak while using the pressure washer, shut off the engine and get to fresh air RIGHT AWAY. See a doctor. You may have carbon monoxide poisoning.

Install Spark Arrestor (if Required)

Equip engine with spark arrestor if machine will be used near any ignitable forest, brush, or grassy land. Make sure you comply with applicable local, state, and federal codes.

Operation

Follow Safety Rules for Operation

After you have checked and fueled the equipment and positioned it in a suitable worksite, it is time to start your pressure washer. The following are the procedures necessary for safe, successful operation of your pressure washer.

WARNING

Failure to follow safety rules may result in serious injury or death to the operator or bystanders.

Instruct operators. Owner must instruct all operators in safe set-up and operation. Do not allow anyone to operate the pressure washer who has not read the Owner's Manual and been instructed on safe use practices.

Safety equipment/controls. Always operate with all safety covers, guards, and barriers in place and in good working order, and all controls properly adjusted for safe operation.

Moving parts. Keep hands, feet, hair and apparel away from moving parts. Air vents may cover moving parts and should be avoided as well. Never remove any guards while the unit is operating.

Ear Protection. Hearing can be damaged from prolonged, close-range exposure to the type of noise produced by this pressure washer. The use of ear plugs or other hearing protection device is recommended for persons working within 15-20 feet of the running pressure washer for an extended period of time.
Eye Protection. Wear ANSI/OSHA required "Z87.1" safety glasses when operating or servicing the pressure washer. Pressurized spray from this unit can cause severe injury to the eyes. Small objects can become airborne as the spray contacts them.

NOTE!

Before starting the pressure washer, review the following general safety rules for operation:

Conditions for Use

Know how to stop. Be thoroughly familiar with proper use of the equipment and all controls and connections. Know how to stop the pressure washer and depressurize system quickly if needed.

Instruct all operators. The pressure washer's owner must instruct all operators and potential renters in safe set-up and operation. Do not allow anyone to operate the pressure washer who has not read the Owner's Manual and been instructed on its safe use.
Adult control only. Only trained adults should set up and operate the pressure washer. Do not let children operate. Pressure washers can generate forces greater than children can control and require judgment beyond what can be expected of children.
Under the influence. Never operate, or let anyone else operate, the pressure washer while fatigued or under the influence of alcohol, drugs, or medication.
Safety equipment / controls in place. Do not operate the pressure washer unless all safety covers, guards, and barriers are in place and in good working order, and all controls are properly adjusted for safe operation.
Damaged. Do not operate the pressure washer with damaged, missing, or broken parts. Never attempt to repair a high pressure hose or component. Always replace it with a part that is rated at or above the pressure rating of the machine.
Modifications. Do not modify the pressure washer in any way or deactivate any safety device. Do not change or add to fuel tank, fuel lines, or exhaust system. Modifications can result in hazards related to carbon monoxide poisoning, fuel leaks, fire, explosion or other serious safety hazards, and will also void the warranty.

During Use

Stay alert. Watch what you are doing at all times.
Clear work area. Clear the work area of all bystanders.
Keep children and pets away.
Keep spray away from electrical wiring. Spray contact with electrical wiring will likely result in severe electrical shock or electrocution.
Hot exhaust/parts. Stay clear of engine exhaust. Never touch hot engine muffler, or other hot surfaces. All are very hot and will burn you.
Never pull by hose. Do not move this machine by pulling on the hose. Hose or connections could fail and

result in catastrophic high pressure release of fluid as well as hose whipping.

Avoid sharp objects. Keep hose away from sharp objects. Bursting hoses may cause injury.

No load bearing. Do not use the pump to support other items of equipment that impose unacceptable loads on the pump. Do not attempt to use this machine as a prop.

Lock trigger safety latch when not spraying. Spray gun is equipped with a built-in trigger safety latch to guard against accidental trigger release. Rotate safety latch to the locked position when not spraying.

Leaving unattended. Always turn off the pressure washer and relieve system pressure before leaving the sprayer unattended.

Prompt Emergency Response

Seek medical aid for suspected injection injury. If injured by high-pressure fluid, no matter how small the wound is, see a doctor at once. A typical injection injury may be a small puncture wound that does not look serious. However, severe infection or reaction can result if proper medical treatment is not administered immediately by a doctor who is familiar with injection injuries.

Seek medical aid for suspected carbon monoxide poisoning. The running engine gives off carbon monoxide, a poisonous gas that can kill you. If you start to feel sick, dizzy, or weak while using the pressure washer, shut off the engine and get to fresh air RIGHT AWAY. See a doctor. You may have carbon monoxide poisoning.

Put on Personal Protective Gear

⚠ WARNING: Personal Protective Gear

Use personal protective gear to prevent:
- Eye and skin injection injury from high pressure spray
- Eye injury from flying debris

1. Wear waterproof gloves, safety glasses with side and top protection, face protection, and protective clothing when operating the machine. If spraying pressure washer specific chemicals, wear a respirator mask to avoid inhalation of vapors if directed on the chemical label.
2. Wear non-slip, protective footwear. Use of pressure washer can create puddles and slippery surfaces. Wear footwear capable of maintaining a good grip on wet surfaces.

Preparing for Operation

Make sure that any regular maintenance has been performed as prescribed in *"Maintenance & Repair"* section.

Check/Add Oil to Pump

⚠ CAUTION

Never run the pump without sufficient lubrication!

1. Turn off engine, allow it to cool and disconnect the spark plug wire.
2. Twist dipstick cap until the arrow on the cap lines up with the arrow on the breather plug tube. Remove the dipstick from the breather plug tube. Then remove the breather plug tube from the pump.

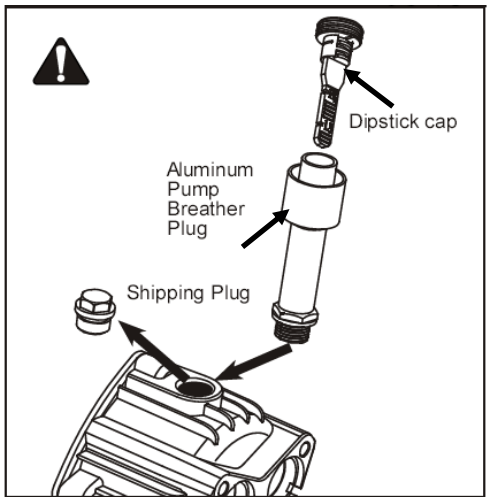

3. Wipe the dipstick off with a clean dry cloth. Insert the dipstick cap into the pump housing and remove it. The oil level should be at least to the lower "L" notch on the dipstick, but not above the upper "H" notch. Add above recommended oil as needed.

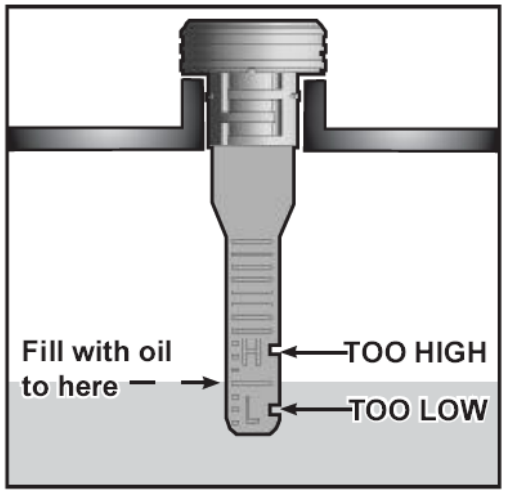

4. Thread the pump breather plug tube back into the pump housing.
5. Align the arrow on the dipstick cap with the arrow on the breather plug tube, insert it, and twist it to secure. Reconnect the spark plug.

6. If oil level is low, use the following:

Model	Oil Type
1577110 15771120	SAE 30 non-detergent pump oil (#35605)

1. Replace fill cap.

Check/Add Engine Oil

Use the recommended oil type for your engine and expected ambient conditions. (See "Engine Manual" Section of this Owner's Manual for oil type and capacity, and more detailed oil check/fill instructions.)

⚠ WARNING: Burn Hazard

Never open oil port while engine is running. Hot oil can spray over face and body.

Notes:

- Engine is shipped without oil. You must add oil before first use.

Add Fuel

⚠ WARNING: Fuel Fire/Explosion Hazard

Gasoline is highly flammable and explosive. Heat, sparks, and flames can ignite fuel vapors, which can become widespread during fueling. A flash fire and/or explosion could result and cause serious injury or death. Always use extreme care when handling fuels. Carefully follow all instructions to avoid the following conditions which could result in fuel ignition:

- gas vapor collection inside enclosures
- static electric sparks
- sparks from electric wiring, batteries, or running engines
- sources of heat (such as a hot engine exhaust)
- open flames, including pilot lights

Always follow these general safety rules when fueling:

1) Turn pressure washer off and allow to cool for at least two minutes before removing any fuel cap.

Note: A running or still-hot engine is hot enough to ignite fuel.

2) Fill fuel tank OUTDOORS – never indoors. Fuel vapors can ignite if they collect inside and enclosure and explosion can result.
3) Stay away from all sources of heat, sparks, and flames. Do not smoke.
4) Never pump fuel directly into the gas tank at a gas station – it could cause a static electric spark. Follow these steps to avoid static electric sparking during fueling:
   - Use an approved portable container to transfer fuel to the pressure washer's tank. (A portable container made of metal or conductive plastic is preferred because it dissipates charge to ground more readily.)
   - Always place container on the ground to be filled. Never fill the portable gas container while it is sitting inside a vehicle, trailer, trunk, or pick-up truck bed.
   - Dissipate static charge from your body before beginning the fueling process by touching a grounded metal object at a safe distance from fuel sources.
   - Keep nozzle in contact with container while filling. Do not use a nozzle lock-open device.
5) Clean up fuel spills/splashes immediately.
   - If possible, move the pressure washer away from spilled fuel on the ground.
   - Wipe up spilled fuel and wait 5 minutes for excess fuel to evaporate before starting engine.
   - Fuel soaked rags are flammable and should be disposed of properly.
   - If fuel is spilled on your skin or clothes, change clothes and wash skin immediately.

Fill Engine Fuel Tank

Check the gasoline tank level. If needed, fill tank with fresh unleaded gasoline from a portable container:

1) Remove engine gas cap.
2) Add gasoline through the fill opening:
   - Use only a UL-approved portable gasoline container to transfer the gasoline to engine's tank.
   - Do NOT overfill the gasoline tank. Allow at least 1/2" of empty space below the fill neck to allow for fuel expansion.
3) Replace gas cap securely before starting engine.
4) Store extra gasoline in a cool, dry place in a UL approved tightly sealed container.

Inspect Fuel System/Check for Leaks

Inspect the engine fuel system and check for leaks before each use.

Do not start pressure washer until all needed repairs have been completed.

⚠ WARNING: Fuel Leak Hazard

Gasoline fuel is highly explosive and fuel leaks can result in fire or explosions. You can be burned and seriously injured if the fuel system is not properly hooked up or there is a fuel leak when you start the engine.

Inspect the entire fuel system. Look for:

- signs of leaks or deterioration
- chafed or spongy fuel hose
- loose connections
- loose or missing fuel hose clamps
- damaged fuel tank or
- defective gasoline shut-off valve

Inspect Spray System

Always inspect spray system for damage and leaks before each use. Do not start pressure washer until all needed repairs have been completed.

⚠ WARNING: High Pressure Fluid Injection Hazard

High-pressure fluid discharge from leaks (even pin-sized) or ruptured components can pierce skin and inject fluid into the body. Injection injury can result in blood poisoning and/or severe tissue damage leading to infection, gangrene, and possibly amputation.

- Never use a finger or skin to check for leaks.
- Never operate machine with damaged or missing hoses/parts.
- Never attempt to repair a high-pressure hose or component – Always replace it with a part that is rated at or above the pressure rating of this machine.

Perform Scheduled Maintenance, As needed

Make sure that any other regular maintenance has been performed as prescribed in this manual in the "Maintenance Schedule Summary" section.

Refer to the “Engine Manual” section of this manual for engine maintenance instructions.

Connect Hoses, Water Supply, and Spray Nozzle

Position pressure washer for use

- For detailed instruction on positioning your pressure washer for use, turn to the “Initial Set-Up” section of this manual and reference “Step 3: Select Suitable Location”.
- Where no flammable vapors, dusts, and gases are present.
- Where there is adequate, unobstructed ventilation airflow.
- With adequate clearance from combustible materials.
- On a firm, level, heat-resistant surface with good drainage and nearby access to a continuous water supply.

Attach Garden Hose to Water Inlet

1.) Make sure the water supply is clean. Debris can cause excess pump wear and reduce performance.
2.) An insufficient water supply will damage your pump. Make sure the water supply is steady and is 20% over the rated flow of your pump. Use a stopwatch to time how long it takes to fill a 5-gallon bucket with your garden hose. The bucket must fill faster than the times listed in the table below.

Model	Time to fill 5 gallon bucket
1577110	100 seconds
15771120	100 seconds

3.) The water supply garden hose must have an inside diameter of at least 5/8". If the hose is more than 100 ft. long, the diameter must be at least 3/4".
4.) Never use a reservoir tank as a water source. Drawing water out of a tank may cause pump cavitation and damage to your pump. This pressure washer is designed for a pressurized water source such as a city water faucet. However, the water source pressure must not exceed 115 psi (8 bar).
5.) Always use a flexible rubber hose for your water supply. Do not use rigid piping.

Attach High Pressure Hose to Spray Gun and Water Outlet

⚠ WARNING: High Pressure

NEVER operate this pump with components (such as hose, connections, and spray gun) rated for lower pressure and/or temperature limits than the machine's maximum rated pressure and temperature, or component could rupture and cause serious personal injury from escaping high pressure fluids.

1) See "Component Identification" section of this manual for location of the pressure washer's water outlet.
2) To attach the pressure hose to the spray gun, spin the pressure hose's 22mm coupler onto the spray gun's inlet, hand tight.

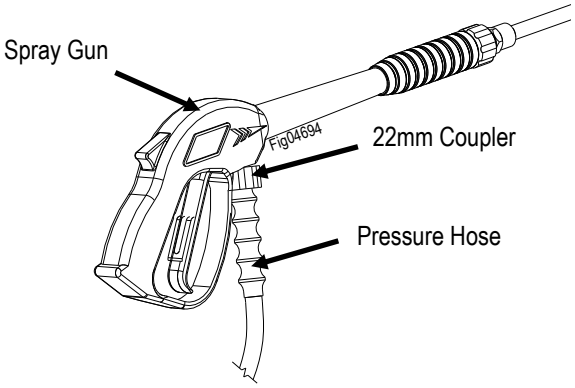

Select Nozzle for Spray Gun

Your pressure washer is equipped with (1) high-pressure nozzle and (1) low-pressure nozzle. Generally, the wider the spray angle of the nozzle, the lower the spray impact produced. Select the appropriate nozzle for the job based on the following table:

Color of Nozzle:	Spray Angle	Used For:
*Red	0	Highest Impact
*Yellow	15	Tough Stains/Stripping
Green	25	General
*White	40	Light Cleaning
Black-Low pressure	65	Chemicals

*Please call Powerhorse Customer Service to order additional nozzles.

NOTE: You must use the low pressure black nozzle for spraying chemicals.

Attach Nozzle to Spray Gun

⚠ WARNING: Depressurize First

Any time you remove/install/change a nozzle, you must depressurize hose line by squeezing the spray gun trigger while the engine is off. Even if the engine has been off for a long period of time, the hose may remain dangerously pressurized.

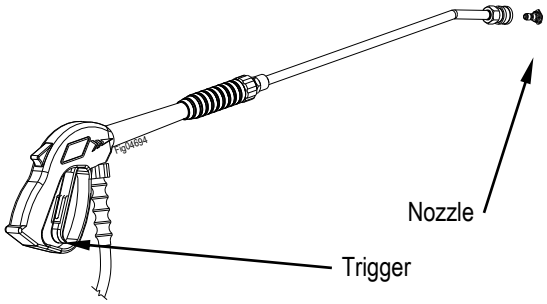

1. Make sure the engine is off and the hose line is depressurized.
2. To install the nozzle, pull the collar back and twist the nozzle firmly into the coupler on the end of the wand

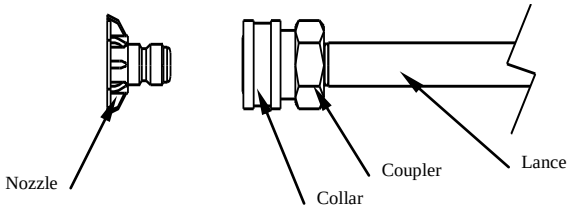

3. Release the collar, making sure it springs back and re-seats to its original (non-retracted) position. *Check the connection by pulling on the nozzle to ensure a tight connection -- if correctly inserted, nozzle will rotate but not pull out.*

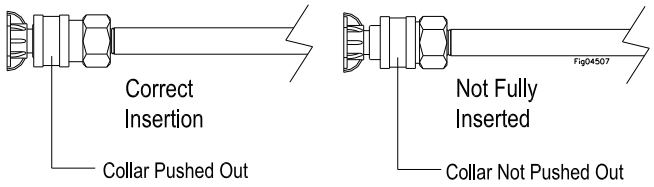

Prime the Water Supply

Turn on water supply and squeeze the trigger

CAUTION: Water Pressure

Never run the pump without the water supply connected and turned on. Operating the pressure washer without a sufficient incoming flow of water will damage the pump.

- Turn on the water supply. Make sure the water supply is steady and flowing at a rate 20% over the rated flow of your pump. (Reference the flow rate table under the Connect Hoses, Water Supply, and Nozzle" section).
- Purge air from the water supply hose by squeezing the trigger until a steady stream of water flows out of the nozzle at low pressure. (Air in the hoses can cause damage to the pump, so always make sure all the air is out of the hoses before starting the pressure washer engine.)
- Make sure the water supply hose is not kinked. A kinked hose will provide insufficient water supply to the pump and reduce its life. Make sure the hose remains unkinked after moving the pressure washer.

Set Up for Chemical Spray (if desired)

Using the proper cleaning chemical for the application can speed up cleaning jobs tremendously.

Your pressure washer is equipped with a chemical injection point on the downstream side of the pump for introducing cleaning chemicals into the water stream. A braided chemical hose is provided to connect at this point. Suction pressure at this connection automatically draws the chemical solution in through the hose, mixing in 1 part chemical to 15 parts water. Adequate suction pressure is created only when the low pressure (black) spray nozzle is used.
The introduction of cleaning chemicals via the chemical injection point affords the following advantages:

- It protects the pump from damage because no chemical passes through the pump.

CAUTION: Chemicals Containing Muriatic Acid

Certain chemicals, such as bleach or those containing muriatic acid, will cause pump damage if introduced upstream through the pump's water inlet.

It mixes the cleaning chemical into a low pressure spray. Cleaning chemicals applied under low pressure adhere better to the surface being cleaned, allowing the formula time to react and remove dirt more effectively.

Note: An external *chemical injector pump* is not recommended for use with this pressure washer, and if used would obviously alter the 15-to-1 dilution ratio.

⚠ WARNING: Chemical Spraying

- Never spray acids, corrosives, or abrasive or flammable liquids. Breathing hazards, surface burns/corrosion, or fire/explosion could result.
- Follow the chemical manufacturer's label instructions for proper use and handling of the chemical. Understand all safety hazards and first aid for all chemicals being used. Always wear protective gloves when handling and cleaning with chemicals, and wear other protective gear as directed by chemical manufacturer. Always dispose of hazardous fluids per local, state, and national guidelines.

Acquire Cleaning Chemical

Use only approved pressure washer chemicals designed for high-pressure use.

CAUTION: Non-approved Chemicals

Non-approved chemicals can damage pressure washer components (seals, wand, hoses, pump, etc.) and be harmful to the environment.

Prepare for Chemical Spray (If Planning to Use)

Prepare the pressure washer for chemical spraying using the following steps:

1. Prepare (dilute) chemical cleaning solution as required for the job.

   (Note: the chemical solution will be automatically mixed with the water at a ratio of 15 parts water to 1 part chemical solution.)
2. Press the braided chemical hose over the chemical injector on the pump.
3. Submerge the suction strainer connected to the braided chemical hose into a bucket containing the chemical solution.

Start-Up Procedures

Start the Engine to Power the Pump.

1. Make sure water supply is connected and primed.

CAUTION: Warranty Void

Running the pump dry will cause damage and void the warranty.

2. To prevent accidental spraying, engage the safety latch on spray gun trigger by rotating it to the locked position.
3. Follow the instructions in the "Engine Manual" section of this manual for starting the engine.

   - If the engine doesn't start on the first try, pressure may build up in the pump. Relieve pressure by squeezing the spray gun trigger before attempting to start engine again. This will make starting easier.

⚠ DANGER: Engine Exhaust

Do not inhale engine exhaust. It contains dangerous carbon monoxide that can kill you.

Apply Cleaning Chemical (If Desired)

1. Make sure the chemical injector is properly set up according to the instructions. Reference "Set Up for Chemical Spray" on the previous page.
2. Make sure the low pressure BLACK nozzle is attached before beginning to spray chemicals -- *Only the low pressure black nozzle will allow chemicals to be drawn through the chemical injector into the water stream.*
3. Apply chemicals by squeezing the spray gun trigger. The chemical injector will draw the chemical into the water stream.
4. Apply chemicals evenly to the cleaning surface. Never use more chemical than is necessary to clean the surface.
5. Allow the chemicals time to react with the dirt before rinsing.
6. Prepare to rinse by changing to a high-pressure nozzle. Changing the nozzle from the low-pressure black nozzle to a high-pressure nozzle will stop the flow of chemicals into the water stream.

   Instructions for selecting a nozzle can be referenced in the "Connect Hoses, Water Supply, and Spray Nozzle" section, see the subsection "Select Nozzle for Spray Gun".
7. Rinse with high-pressure spray as instructed below.

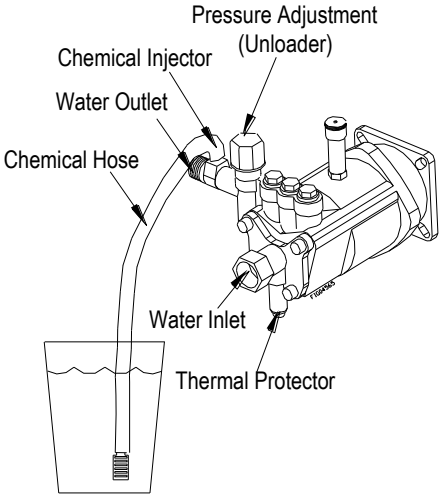

Begin High Pressure Spray

⚠ WARNING: High Pressure Spraying Safety

- **Keep spray away from people.** Never direct discharge stream at or near any person. Do not allow any part of the body to come in contact with the fluid stream. High-pressure spray can cause serious skin, eye, or falling injuries. Injection injury will occur if high-pressure spray pierces the skin, injecting liquid under the skin. Injection injury can result in blood poisoning and/or severe tissue damage leading to infection, gangrene and possibly amputation. Seek medical attention.
- **Do not secure trigger open.** To reduce risk of injury, do not attempt to secure the spray gun open by blocking or tying the spray gun in the open position.
- **Prevent slips / loss of balance**. High-pressure spray could cause you to lose balance from kickback forces, and wet surfaces can be slippery.
  - Keep good footing and balance at all times. Do not overreach.
  - Do not stand on unstable support when spraying.
  - If spraying from an elevated surface, use fall protection because spray gun kickback can propel you off the elevated surface. When spraying from a ladder or scaffolding, ensure it is firmly anchored from sway or tip-over.
  - Be aware of puddles and slippery surfaces. Ensure there is adequate drainage to prevent pooling of water.
- **Prevent surface damage & flying debris** – Surfaces being sprayed must be strong enough to withstand high-pressure spray or damage may result. In addition, high-pressure spray will dislodge unsecured objects as well as surface chips and debris, resulting in hazardous flying objects that can cause personal injury or property damage. Do not spray brittle surfaces or breakable, fragile, or unsecured objects such as:
  - stucco or laminar flagstone
  - some painted surfaces
  - windows or glass doors (because they may break)
  - light fixtures, flowerbeds, mailboxes
  - unsecured, lightweight objects

Procedure:

1. Put on the high-pressure spray nozzle (always relieve system pressure first and follow instructions for attaching a nozzle).
2. Clear the cleaning area of all persons. Keep children and pets away.
3. Hold the spray gun firmly with two hands and a sturdy stance -- Gun kicks back when triggered.
4. Wash from the bottom to the top, using side-to-side motions. This washes away heavy dirt and allows the detergent to soak as you work toward the top.
5. Use the width of the spray pattern to wash a wide path. Overlap spray paths for complete coverage.
6. The nozzle should be 12" to 24" from the work, closer for tough areas.
7. Small parts should be washed in a basket so the pressure does not push them away. Larger, lightweight parts should be clamped down.
8. The pressure washer is set and locked to the maximum rated pressure when it leaves the factory. To reduce the pressure, turn the unloader knob counterclockwise. To return to maximum pressure turn unloader knob clockwise.

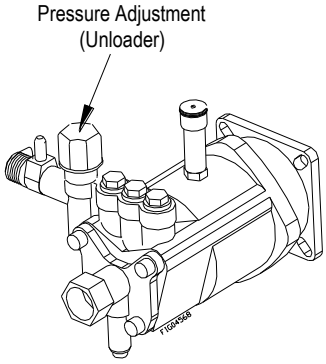

⚠ WARNING: Warranty Void

Do not attempt to alter the unloader valve's maximum pressure. Excess pressure could cause serious injury from escaping high-pressure fluids and/or pump damage. Any alteration other than turning the adjustment knob will void your warranty.

9. If temporarily interrupting spraying, rotate trigger safety latch downward to the locked position to guard against accidental trigger release.

Spray Gun Safety Lock

When not spraying, use the spray gun safety lock to prevent accidental high pressure discharge.

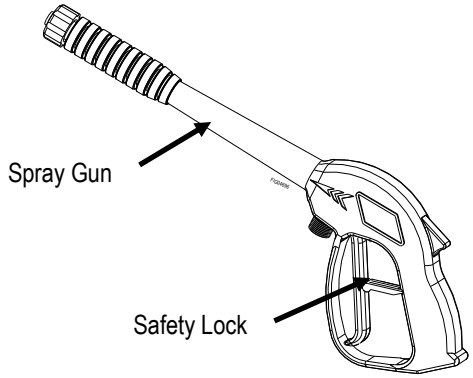

10. Always turn off the engine and activate spray gun trigger to relieve system pressure when:
    - the sprayer is unattended
    - disconnecting hoses, installing/cleaning nozzles, or servicing the pump.

⚠ WARNING: Injury

Always turn off the engine and relieve system pressure when finished spraying or when leaving sprayer unattended. Serious injury could result from unintentional release of high-pressure spray.

Shutdown

Stop the engine using the following steps:

⚠ WARNING: Injury

Never disconnect the high-pressure hose from the pump or spray gun while the system is pressurized. Relieve pressure by squeezing the spray gun trigger after the engine is turned OFF.

1. Turn engine OFF.
2. Turn water supply OFF.
3. *Actuate spray gun trigger to relieve system pressure*.
4. Remove garden hose.
5. Remove pressure hose.
6. Remove nozzle from spray gun.
7. Turn gasoline line valve to the OFF position.
8. If chemicals were used, remove chemical injector tube from the pump.
9. Cool engine at least five minutes before storing, a hot engine is a fire hazard.

Storage

When you are finished using the pressure washer, you must prepare the sprayer for storage and store it in a proper location.

Between-Use Storage

Perform periodic maintenance as directed in this manual to keep the pressure washer in safe working condition.

Choose a storage location that is:

- Clean and dry.
- Away from sources of heat, open flames, sparks, or pilot lights, even if the pressure washer's engine fuel tank is empty. Residual fuel fumes from tank can ignite.

Away from extreme high or low temperatures. Do not store the pressure washer in freezing conditions unless it is prepared as directed below for those conditions.

Note:

- **If you will be storing the pressure washer in freezing conditions**, follow the instructions for preparing the sprayer for storage in freezing conditions.
- **If you will not be using the pressure washer again for 30 days or more**, follow the instructions for preparing the engine for long-term storage.

⚠ WARNING: Flammable Materials

- **Fuel and its vapors can ignite and cause a fire.** Select a well-ventilated storage area away from sources of heat, flame, or sparks.
- **A hot engine can ignite flammable materials.** Always let engine cool at least five minutes before storing.

Prepare Pressure Washer for Freezing Conditions

If you will be storing the pressure washer in freezing temperatures, you must properly prepare the pressure washer to prevent water from freezing in the system.

⚠ WARNING: Freezing Conditions

Do not allow water to freeze in the pressure washer, high pressure hose, or spray gun. Freezing water can cause damage to the equipment and cause the spray gun to fail in the open position. A spray gun that has failed in the open position can whip around and cause personal injury when the pressure washer is started.

1. Drain the water from the high pressure hose and spray gun by depressing the trigger on the spray gun until all water drains out.
2. Disconnect the plumbing that connects to the pump outlet.
3. Obtain the materials you will need:
   - 12" piece of garden hose or equivalent
   - funnel
   - approximately 6 oz. of RV antifreeze.
4. Attach the 12" garden hose piece with the funnel to the pump inlet.
5. Pour RV antifreeze into the funnel, then pull the recoil a few times until antifreeze comes out of the pump outlet.

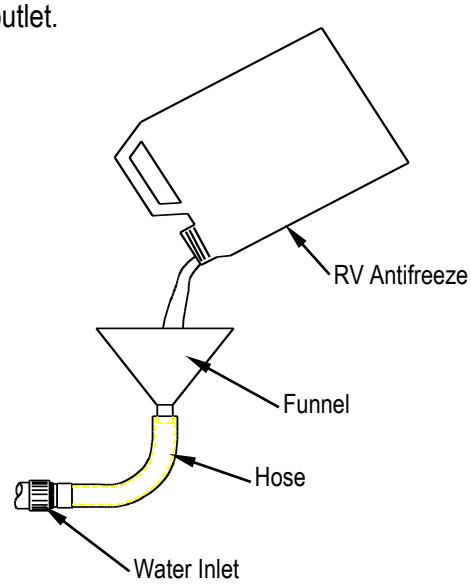

Prepare Engine for Long Term Storage

First prepare the engine for long term storage if you will not be using the pressure washer for more than 30 days.

Fuel can become stale when stored over 30 days. Stale fuel causes acid and gum deposits to form in the fuel system which can cause malfunction of the engine.

1. Prepare fuel system for storage:
   - **Drain all gasoline** from the tank and carburetor. This is most easily accomplished by *running the pressure washer with the high pressure hose* until the engine stops from lack of fuel.

     OR
   - **Add fuel stabilizer** to the gasoline (following manufacturer's instructions)

     Fuel stabilizer steps:

     a. Ensure gas tank is full.
     b. Add fuel stabilizer to fuel tank.
     c. *Run pressure washer with high pressure hose* at least 5 minutes after adding stabilizer to allow it to enter the fuel system.
     d. Shut off engine
2. Lubricate cylinder and piston:
   a. Disconnect spark plug wire and remove spark plug
   b. Add one teaspoon oil through spark plug hole
   c. Place rag over spark plug hole and slowly pull the recoil a few times to lubricate the combustion chamber.

Replace spark plug, but do not reconnect the spark plug wire.

Prepare Pressure Washer for Storage

Prepare the pressure washer for storage.

1. Make sure the engine start switch is OFF.
2. Disconnect the engine spark plug wire if you haven't already done so.
3. Disconnect the high-pressure hose, garden hose, and spray gun.

Move Pressure Washer to Storage Location

Let engine cool for 5 minutes before moving the pressure washer to its storage location.

Maintenance & Repair

⚠ WARNING: Maintenance Hazards

ALWAYS shut off water supply, bleed water pressure, turn off engine and disconnect the spark plug wire before cleaning, adjusting, or servicing the pressure washer. After servicing, make sure all guards and cover shields are replaced before using.

Maintenance Schedule Summary

Item	Frequency
Remove dust/debris accumulation	As needed
Inspect fuel system	Each use
Inspect spray system	Each use
Clean inlet filter	Each use
Check tire pressure	Each use
Perform engine maintenance	As specified in the “Engine Manual” Section
Change pump oil	• After first 50 hours of use • Every 3 months or 500 hours of use after that

See detailed instructions for each maintenance item below.
(Note: For end-of-the-season storage instructions, see the "Storage" section of this manual.)

See detailed instructions for each maintenance item below.

Detailed Instructions – Maintenance & Repair

No modifications. Never modify or alter the pressure washer in any way. Modifications can create serious safety hazards and will also void the warranty.

Follow Safety Rules

Read and follow these safety rules whenever you will be servicing the pressure washer:

- **Turn off / relieve pressure first.** Always turn off pressure washer and relieve system pressure before inspection or maintenance. Remove spark plug or spark plug wire to prevent accidental starting.
- **Fuel valve off.** Turn fuel shut-off valve to OFF position before transporting or servicing the pressure washer.
- **Replace guards.** Make sure all guards and cover shields are replaced after servicing the pressure washer.
- **Major repair.** Major service, including the installation or replacement of parts, should be performed only by a qualified service technician. Obtain factory approved parts from Powerhorse Product Support at 1-800-270-0810.
- **Replacement parts**. If a part needs replacement, only use factory approved repair parts. Replacement parts that do not meet specifications may result in a safety hazard or poor operation of the pressure washer and will void the warranty.

Keep Pressure Washer Clean

If dust or debris accumulates on the pressure washer, clean the pressure washer with a damp cloth or soft bristle brush. Do not allow air intakes to become blocked.

⚠ CAUTION

Do not spray pressure washer with a garden hose or pressure washer. Water may enter the pressure washer and cause damage.

Inspect Spray System

Inspect spray system for damage and leaks before each use.

Do not start pressure washer until all needed repairs have been completed.

> **⚠ WARNING: High Pressure Fluid Injection Hazard**
>
> High pressure fluid discharge from leaks (even pin-sized) or ruptured components can pierce skin and inject fluid into the body. Injection injury can result in blood poisoning and/or severe tissue damage leading to infection, gangrene, and possibly amputation.

- Never use a finger or skin to check for leaks.
- Never operate machine with damaged or missing hoses/parts.
- Never attempt to repair a high-pressure hose or component – Always replace it with a part that is rated at or above the pressure rating of this machine.

1) Check hoses, fittings, wand, trigger gun and connections for signs of wear, cracks, looseness, or leaks. Replace as required.
2) Check and clean the nozzle orifice.

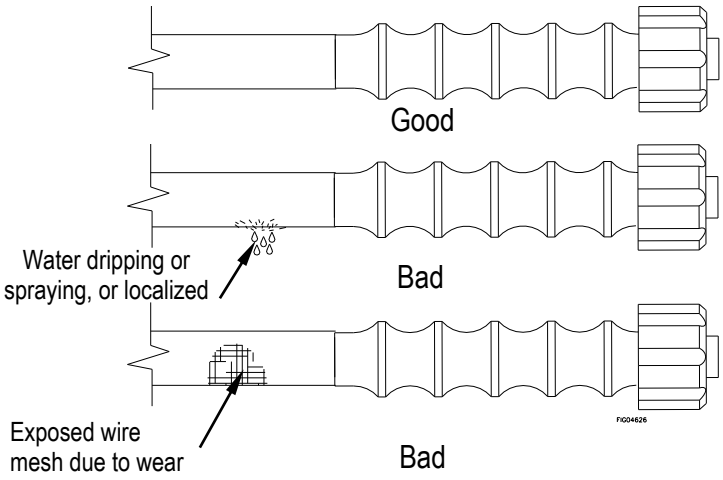

Inspect Fuel System

Inspect the engine fuel system and check for leaks before each use.

Do not start pressure washer until all needed repairs have been completed.

> **⚠ WARNING: Filter Disposal**
>
> Gasoline fuel is highly explosive and fuel leaks can result in fire or explosions. You can be burned and seriously injured if the fuel system is not properly hooked up or there is a fuel leak when you start the engine.

Inspect the entire fuel system. Look for:

- signs of leaks or deterioration,
- chafed or spongy fuel hose,
- loose connections,
- loose or missing fuel hose clamps,
- damaged fuel tank, or
- defective gasoline shut-off valve.

Check Tire Pressure

Check and refill tire pressure before each use.

1) Remove air cap on tire.
2) Check tire pressure.
3) If needed, fill tire to 30 psi (2.07 bar). Do not overinflate.

Replace air cap.

Perform Engine Maintenance

-As specified in the "Engine Manual" Section.

Engine maintenance items include:

1. Changing oil and oil filter
2. Air filter check/replacement
3. Spark plug cleaning and replacement
4. Fuel filter check/replacement

Inspecting and cleaning muffler (and spark arrestor if equipped)

Change Pump Oil

Change the pump oil after the first 50 hours of use, and then after every 3 months or 500 hours of use after that.

1. Remove drain plug from pump.
2. Drain pump oil into suitable container and dispose of responsibly.
3. Reinstall oil drain plug.
4. Make sure unit is sitting level.
5. Reference the “Specifications” section of this manual to determine the oil type and quantity needed for your pump model.
6. Replace oil fill cap.

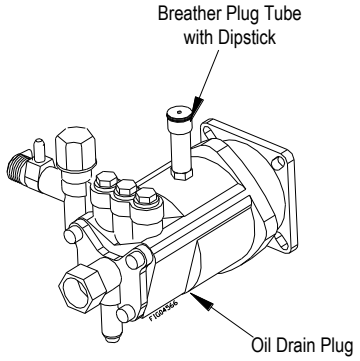

*Drain plug not visible in picture.

NOTE TO COMMERCIAL USERS:

All mechanical equipment, no matter how well designed, will need maintenance and repairs. A Powerhorse pressure washer is no exception. At times, a Powerhorse pressure washer may become inoperable because repairs are required. Powerhorse Product Support will assist in these repairs as needed, but if an inoperable pressure washer creates a major expense to your business, then we strongly recommend the following:

- Have a staff person become familiar with the mechanical operation of the pressure washer and capable of making minor repairs and performing all preventative maintenance procedures.
- Keep a stock of recommended service parts for maintenance and minor repairs.

IMPORTANT: Replacement Parts

If a part needs replacement, only use parts that meet the manufacturer's part number specifications. Replacement parts that do not meet specifications may result in a safety hazard or poor operation of the pressure washer.

Contact Powerhorse Product Support at 1-866-443-2576 for any questions, problems, or parts orders.

Troubleshooting

This section provides a list of the more frequently encountered pressure washer malfunctions, their causes and corrective actions. Some corrective actions can be performed by the operator or maintenance personnel, and others may require assistance of a qualified electrician or Service Center.

ENGINE WILL NOT START	
Causes	***Solutions***
Low Oil Shutdown	Fill engine with the adequate amount of oil
Cold Engine	Choke engine to start
No Fuel	Add gas to fuel tank - Make sure fuel shutoff valve is open
Engine not turned ON	Place ON/OFF switch in the ON position
Spark plug wire not attached	Attach spark plug wire to spark plug
LOW/SURGING PRESSURE	
Causes	***Solutions***
Insufficient water supply	Increase water flow - Check for kinked or pinched hose
Plugged inlet screen	Pull out and clean screen carefully
Need to use high pressure nozzle	Change to the green nozzle
Plugged nozzle	Remove nozzle, check for blockage
Worn nozzle	Replace nozzle
Leak in high pressure line	Fix leaks
NO CHEMICAL INJECTION	
Causes	***Solutions***
Need to use different nozzle	Change to the black nozzle
Back pressure from extra-long hose	Try shorter high pressure hose
Leak in clear chemical hose	Replace hose. Use hose clamps if necessary
Chemical strainer not submerged	Make sure strainer is completely submerged in solution

Parts Explosion- Models 1577110, 15771120- Rev E

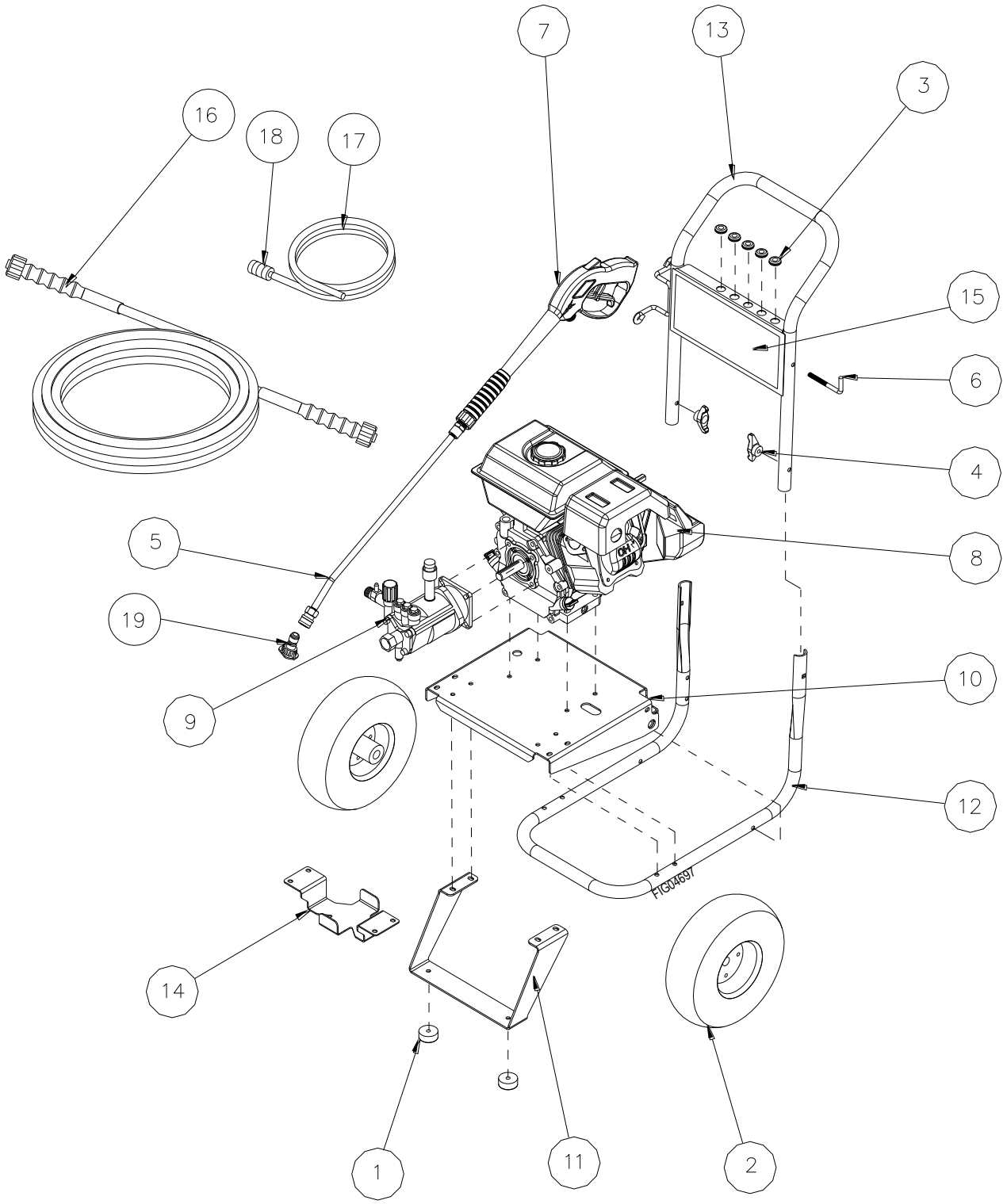

Parts List-Models 1577110, 15771120- Rev E

Ref#	Part#	Description	Qty	Model
1	2215	Rubber Feet	2	All
2	12278	Wheels	2	All
3	35198	Rubber Grommet	5	1577110
			6	15771120
4	38578	T-Handle Knob	2	All
5	791309	18.5” Lance	1	All
6	38509	Threaded Gun Hook	1	All
7	780828	Spray Gun, 3000 PSI, 22mm Coupler	1	All
8	789712	Powerhorse 208cc Engine, Recoil	1	1577110
	789600	Powerhorse 208cc Engine, Electric Start	1	15771120
9	791074	Pump, 2.5 GPM, 3000PSI, Easy Start	1	All
10	788421	Base	1	All
11	788529	Leg	1	All
12	788568	Base Tube	1	All
13	788569	Handle	1	All
14	788911	Battery Bracket	1	15771120
15	788800	Operation Instruction and Spray Pattern Decal	1	All
16	780841	High Pressure Hose, ¼” x 25”,22mm Coupler	1	All
17	777165	Chemical Hose (Sold by Foot)	3 ft	All
18	221222	Chemical Strainer	1	All
19	781025	Nozzle 2 Pack (3.0 orifice)	1	All

Pump Exploded View- Rev E

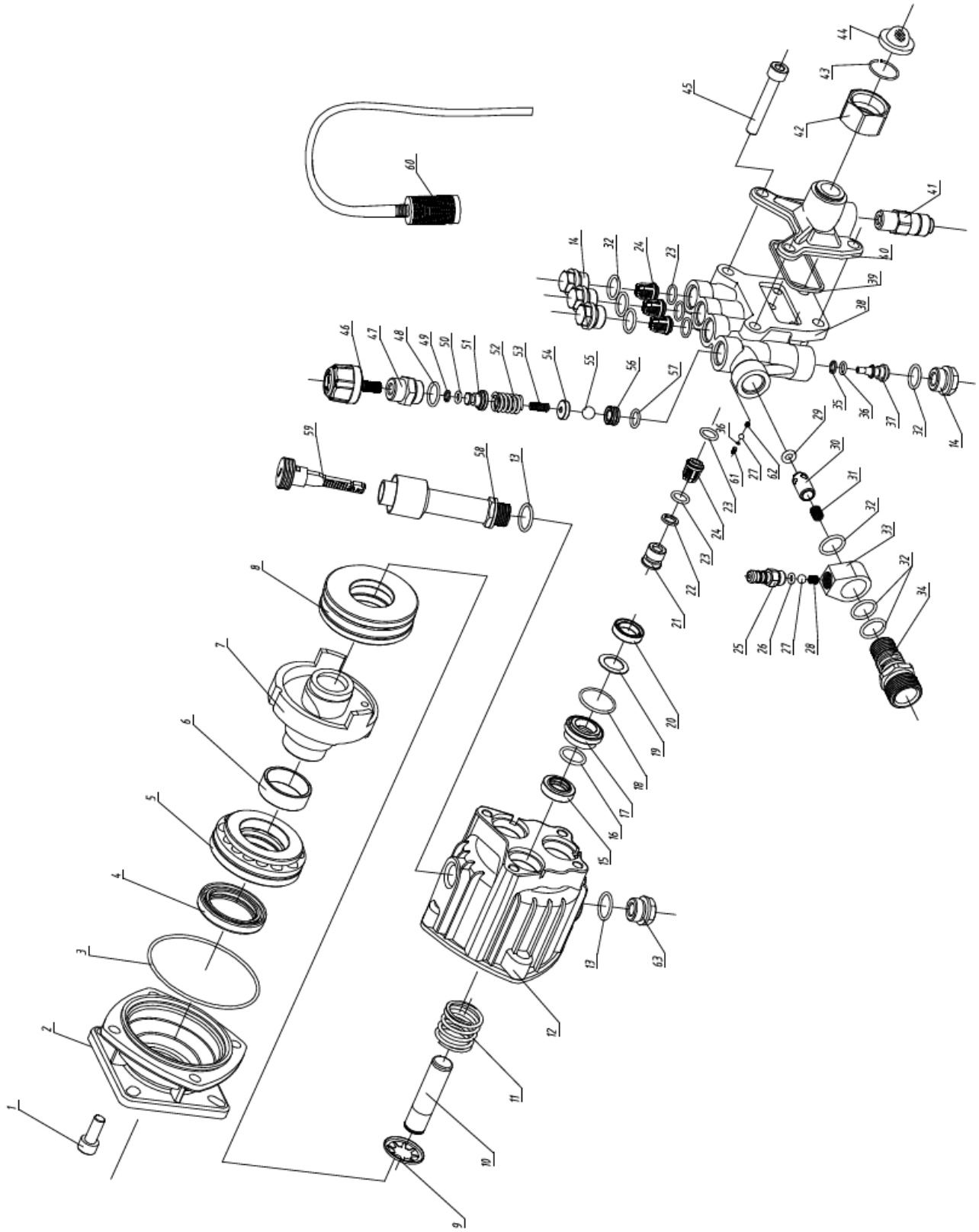

Pump Parts List- Rev E

Item	Description	Part #	Qty
1	Socket head screw	781361	1
2	Pump basal flange	Kit #1	1
3	O-ring 80X2.4	Kit #1	1
4	Radial shaft seal FB36-50-7	Kit #1	1
5	Angular contact bearing	*N/A*	1
6	Wearable sheath	*N/A*	1
7	Wobble plate	*N/A*	1
8	Front bearing (51307B)	*N/A*	1
9	Spring disk	*N/A*	1
10	Plunger	*N/A*	1
11	Plunger spring	*N/A*	1
12	Crankcase	*N/A*	1
13	O-ring 14.2X1.9	781373	2
14	Outlet plug	Kit #5	4
15	Oil seal	Kit #2	3
16	O-ring 15X2.2	Kit #2	3
17	Spacer	Kit #2	3
18	O-ring 21.8X1.9	Kit #2	3
19	Water seal	Kit #2	3
20	Compaction washer	Kit #2	3
21	Inlet plug	*N/A*	3
22	Washer	*N/A*	3
23	O-ring 9.8X1.9	781383 or Kit #3	9
24	Valve	781384 or Kit #3	6
25	Hose barb	Kit #4	1
26	O-ring Ø3.68X1.78	Kit #4	1
27	Steel ball	Kit #4 or Kit #10	2
28	Small cone spring	Kit #4	1
29	O-ring 5.3X2.65	Kit #4	1
30	Outlet cone valve	Kit #4	1
31	Cone valve spring	Kit #4	1

Item	Description	Part #	Qty
32	O-ring 14.2X1.9	Kit #4 or Kit #5	7
33	Hose barb seat	Kit #4	1
34	Outlet nut M22×1.5-14	Kit #4	1
35	Back up ring 9X6.2X1.2	Kit #5	1
36	O-ring 6 X1.78	Kit #5 or Kit #10	2
37	Back water valve core	Kit #5	1
38	Pump head	*N/A*	1
39	Inlet water seal	Kit #6	1
40	Inlet water body	Kit #6	1
41	Thermal relief valve	781401	1
42	Inlet swivel nut	Kit #7	1
43	Clip ring	Kit #7	1
44	Water filter	Kit #7	1
45	Socket head screw M8X50	*N/A*	4
46	Adjusting screw	Kit #8	1
47	Adjusting screw plug	Kit #8	1
48	O-ring 15X2.5	Kit #8	1
49	Back up ring 8.4X5.3X1.2	Kit #8	1
50	O-ring 5.2X1.9	Kit #8	1
51	Spring holder	Kit #8	1
52	Big pressure spring	Kit #8	1
53	Small pressure spring	Kit #8	1
54	Ball holder	Kit #8	1
55	Steel ball 8.7	Kit #8	1
56	Back water valve port	Kit #8	1
57	O-ring 9.25X1.78	Kit #8	1
58	Breather Plug Tube	Kit #9	1
59	Dipstick		1
60	Siphon hose with filter	789237	1
61	Easy start	Kit # 10	1
62	Spring		1
63	Drain plug	789480	1

Kit Parts List-Rev E

Kit #	Description	Item #	Items Included	Qty	Kit Part #	Kit Qty Needed
1	Flange w/ Seal Kit	2	Pump basal flange	1	782837	1
		3	O-ring 80X2.4	1		
		4	Radial shaft seal FB36-50-7	1		
2	Seal Kit	15	Oil seal	1	782843	3
		16	O-ring 15X2.2	1		
		17	Spacer	1		
		18	O-ring 21.8X1.9	1		
		19	Water seal	1		
		20	Compaction washer	1		
3	Valve Kit	23	O-ring 9.8X1.9	1	781122	6
		24	Valve	1		
4	Outlet Kit w/ Injector	25	Hose barb	1	782838	1
		26	O-ring Ø3.68X1.78	1		
		27	Steel ball	1		
		28	Small cone spring	1		
		29	O-ring 5.3X2.65	1		
		30	Outlet cone valve	1		
		31	Cone valve spring	1		
		32	O-ring 14.2X1.9	1		
		33	Hose barb seat	1		
		34	Outlet nut M22×1.5-14	1		
5	Valve Cap Kit	14	Outlet plug	1	782839	4
		32	O-ring 14.2X1.9	1		
		35	Back up ring 9X6.2X1.2	1		
		36	O-ring 6X1.78	1		
		37	Back water valve core	1		
6	Inlet Flange Kit	39	Inlet water seal	1	782840	1
		40	Inlet water body	1		
7	Inlet Kit	42	Inlet swivel nut	1	782841	1
		43	Clip ring	1		
		44	Water filter	1		
8	Unloader Kit	46	Adjusting screw	1	782842	1
		47	Adjusting screw plug	1		
		48	O-ring 15X2.5	1		
		49	Back up ring 8.4X5.3X1.2	1		
		50	O-ring 5.2X1.9	1		
		51	Spring holder	1		
		52	Big pressure spring	1		
		53	Small pressure spring	1		
		54	Ball holder	1		
		55	Steel ball 8.7	1		
		56	Back water valve port	1		
		57	O-ring 9.25X1.78	1		
9	Breather Plug with Dipstick Kit	58	Breather Plug Tube	1	785819	1
		59	Dipstick	1		
10	Easy Start Kit	27	Steel ball	1	789479	1
		36	O-ring 6X1.78	1		
		61	Easy start	1		
		62	Spring	1		

Engine Exploded View (1577110)-Rev E

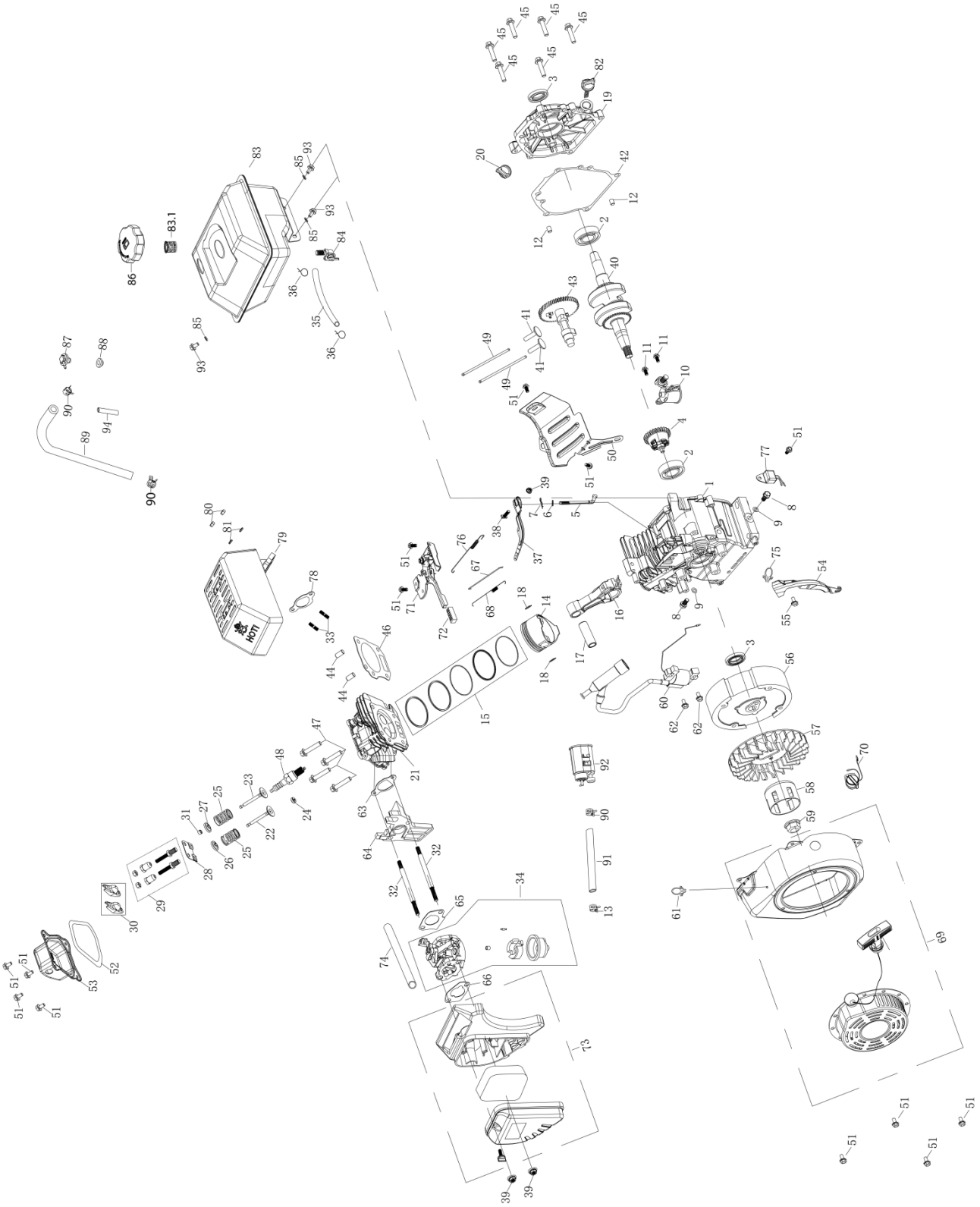

Engine Parts List (1577110)-Rev E

Ref#	Part #	Description	Qty
1	N/A	CRANKCASE	1
2	N/A	BALL BEARING	2
3	N/A	OIL SEAL	2
4	N/A	GOVERNOR ASSEMBLY	1
5	N/A	SHAFT, GOVERNOR ARM	1
6	N/A	WASHER, GOVERNOR ARM SHAFT	1
7	N/A	PIN, LOCK	1
8	Kit # 11	BOLT, DRAIN PLUG	2
9		WASHER,DRAIN PLUG	2
10	788901	SWITCH ASSEMBLY, OIL LEVEL	1
11	N/A	BOLT	2
12	N/A	DOWEL PIN,CASECOVER	2
13	Kit # 12	CLIP, FUEL LINE	1
14	N/A	PISTON	1
15	N/A	SCRAPER RING SET ,PISTON	1
16	N/A	ROD ASSEMBLY, CONNECTING	1
17	N/A	PIN, PISTON	1
18	N/A	CLIP, PISTON	2
19	N/A	COVER ASSEMBLY, CRANKCASE	1
20	N/A	OIL PLUG	1
21	N/A	CYLINDER HEAD	1
22	N/A	VALVE, IN	1
23	N/A	VALVE EXHAUST	1
24	N/A	RETURNER,INTAKE VALVE	1
25	N/A	SPRING, VALVE	2
26	N/A	SEAT, VALVE SPRING,IN	1
27	N/A	SEAT, VALVE SPRING,EX	1
28	N/A	PLATE, PUSH ROD GUIDE	1
29	N/A	ROCKER FASTENYNG BOLT	2
30	N/A	ROCKER	2
31	N/A	ROTATOR	1
32	Kit # 7	BOLT, STUD	2
33	Kit # 6	BOLT, STUD	2
34	Kit # 7	CARBURETOR ASSEMBLY	1
35	Kit # 5	FUEL LINE	1
36	Kit # 5	CLIP, FUEL LINE	2
37	N/A	GOVERNOR ARM	1
38	N/A	BOLT, GOVERNOR ARM	1
39	Kit # 2	NUT	3
40	N/A	CRANKSHAFT ASSEMBLY	1
41	N/A	LIFTER,VALVE	2
42	N/A	PACKING, CASECOVER	1
43	N/A	CAMSHAFT ASSEMBLY	1
44	N/A	PIN, DOWEL	2
45	N/A	BOLT	6
46	N/A	GASKET, CYLINDER HEAD	1
47	N/A	BOLT	4
48	783127	SPARK PULG	1
49	N/A	ROD, PUSH	2
50	N/A	SHROUD	1
51	Kit # 1 Kit # 8, Kit # 10	BOLT	13

Ref#	Part #	Description	Qty
52	Kit # 8	PACKING, HEADCOVER	1
53		COVER COMP, CYLINDER HEAD	1
54	N/A	WIND SHIEL COMP.	1
55	N/A	BOLT	1
56	N/A	FLYWHEEL ASSEMBLY	1
57	Kit # 1	FAN, RECOIL STARTER	1
58		PULLEY, STARTER	1
59		NUT	1
60	Kit # 9	IGNITION COIL ASSY	1
61	Kit # 1	CLIP	2
62	Kit # 9	BOLT	2
63	Kit # 7	PACKING, INTAKE	1
64		INSULATOR, CARBURETOR	1
65		PACKING, CARBURETOR	1
66		SPACER, CARBURETOR	1
67	Kit # 13	ROD, GOVERNOR	1
68	Kit # 13	SPRING, THROTTLE RETURN	1
69	Kit # 1	RECOIL STARTER ASSEMBLY	1
70		SWITCH ASSEMBLY	1
71	N/A	SHROUD ASSY, UPPER	1
72	N/A	SPEED REGULATING HANDLE	1
73	Kit # 2	AIR CLEANER ASSEMBLY	1
74		TUBE, BREATHER	1
75	N/A	CLIP	1
76	Kit # 13	SPRING, GOVERNOR	1
77	Kit # 10	AMPLIFIER	1
78	Kit # 6	PACKING, EXHAUST	1
79		MUFFLER COMP	1
80		NUT	2
81		SPRING WASHER	2
82	783136	DIPSTICK	1
83	Kit # 5	FUEL TANK ASSEMBLY	1
83.1	Kit # 4, Kit # 5	FUEL FILTER	1
84	789697 & Kit # 5	FUEL COCK	1
85	Kit # 5	SPRING WASHER	3
86	Kit # 4, Kit # 5	FUEL TANK CAP COMP	1
87	Kit # 5	TANK VENT FITTING	1
88		PACKING WASHER, ONE-WAY VALVE	1
89	Kit # 3, Kit # 5	CONNECTING PIPE	1
90	Kit # 3, Kit # 5, Kit # 12	CLIP, FUEL LINE	3
91	Kit # 12	CONNECTING PIPE	1
92		CARBON TANK COMP	1
93	Kit # 5	BOLT	3
94	Kit # 3, Kit # 5	VENTILATION TUBE PROTECTOR	1

Engine Kit Parts List (1577110)-Rev E

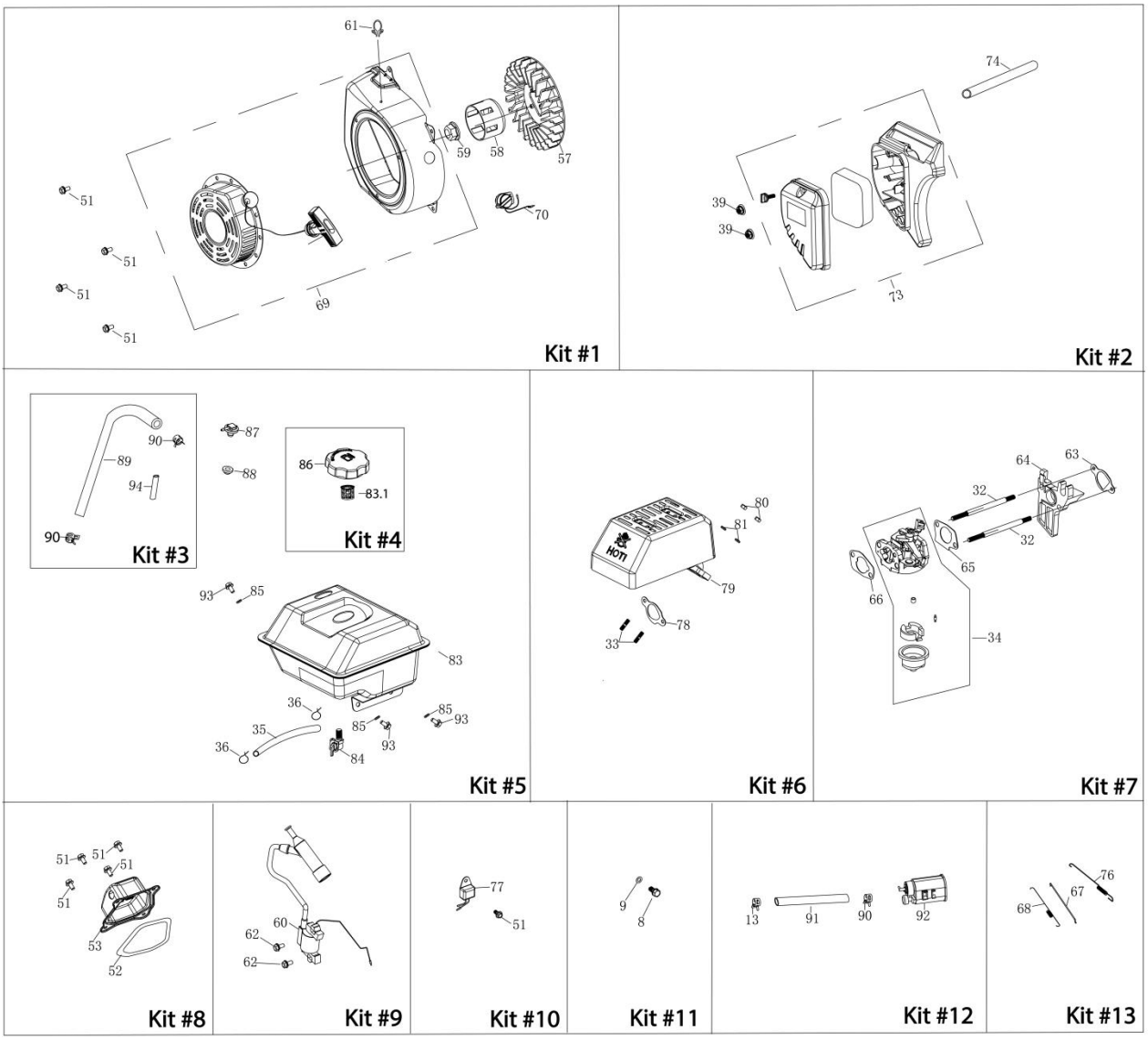

Kit Ref #	Kit Part #	Description	Qty
1	791621	Recoil & Fan Kit	1
2	791622	Air Filter Kit	1
3	791623	Vent Hose Kit	1
4	789262	Fuel Cap Kit	1
5	791624	Tank Kit	1
6	789693	Muffler Kit	1
7	791625	Carburetor Kit	1
8	791626	Valve Cover Kit	1
9	789696	Ignition Coil Kit	1
10	791627	Oil Alert kit	1
11	783126	Drain Bolt Kit	2
12	791628	Carbon Canister Kit	1
13	791629	Governor & Spring Kit	1

Engine Exploded View (15771120)-Rev E

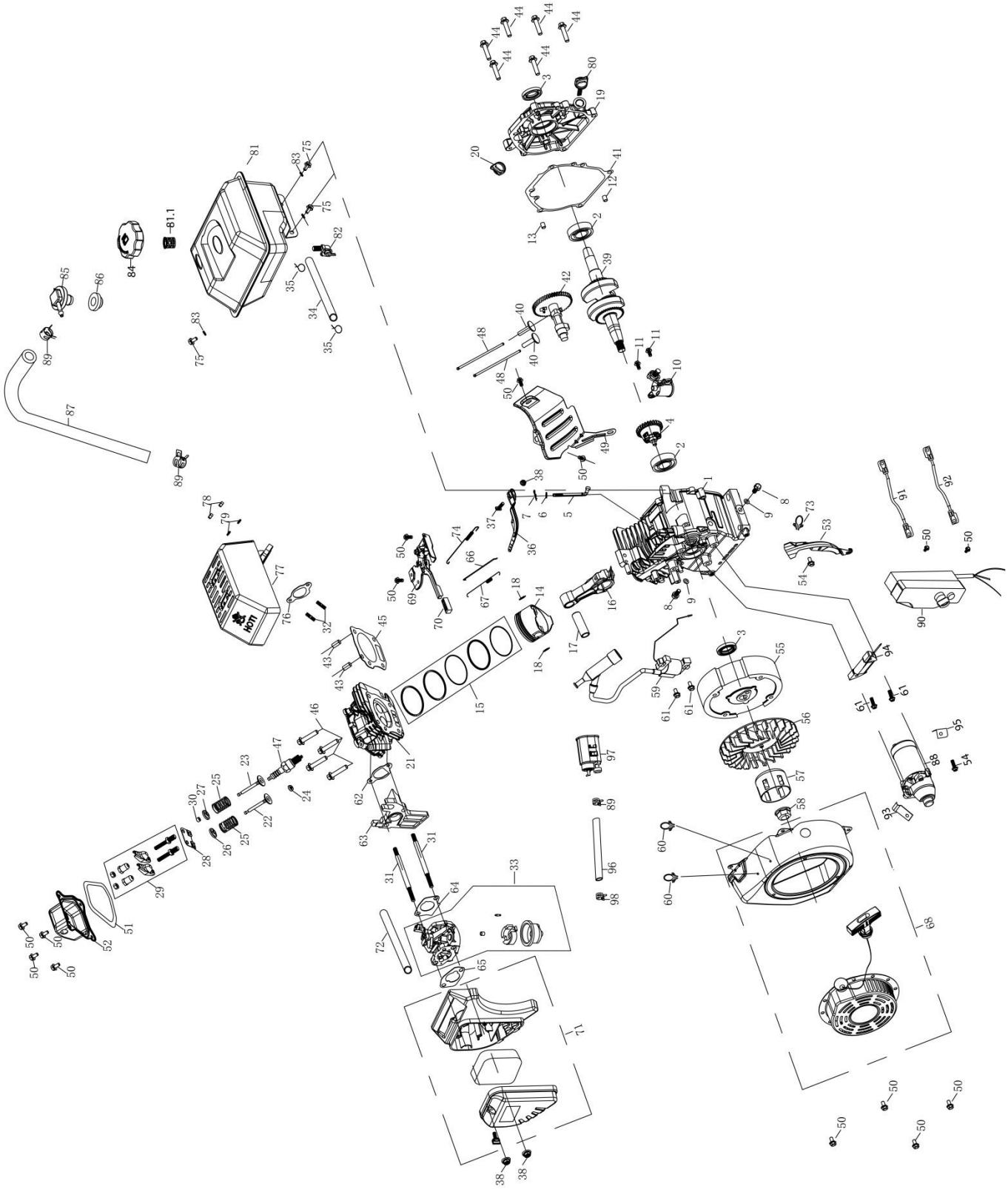

Engine Parts List (15771120)-Rev E

Ref#	Part #	Description	Qty
1	N/A	Crankshaft	1
2	N/A	Ball bearing	2
3	N/A	Oil Seal	2
4	N/A	Governor Assembly	1
5	N/A	Shaft, Governor Arm	1
6	N/A	Washer, Governor arm shaft	1
7	N/A	Pin, Lock	1
8	Kit # 10	Bolt, Drain Plug	2
9		Washer, Drain Plug	2
10	788901	Switch Assembly, Oil Level	1
11	N/A	Bolt	2
12	N/A	Dowel Pin, Case Cover	1
13	N/A	Dowel Pin, Case Cover	1
14	N/A	Piston	1
15	N/A	Scraper Ring Set ,Piston	1
16	N/A	Rod Assembly., Connecting	1
17	N/A	Pin, Piston	1
18	N/A	Clip, Piston	2
19	N/A	Cover Assembly, Crankcase	1
20	N/A	Oil Plug	1
21	N/A	Cylinder head	1
22	N/A	Valve, In	1
23	N/A	Valve Exhaust	1
24	N/A	Returner, Intake Valve	1
25	N/A	Spring, Valve	2
26	N/A	Seat, Valve Spring, In	1
27	N/A	Seat, Valve Spring, Ex	1
28	N/A	Plate, Push Rod Guide	1
29	N/A	Rocker Assembly	2
30	N/A	Rotator	1
31	Kit # 7	Bolt, Stud	2
32	Kit # 6	Bolt, Stud	2
33	Kit # 7	Carburetor	1
34	Kit # 5	Fuel line	1
35	Kit # 5	Clip, Fuel line	2
36	N/A	Governor arm	1
37	N/A	Bolt, Governor Arm	1
38	Kit # 2	Nut	3
39	N/A	Crankshaft Assembly	1
40	N/A	Lifter, Valve	2
41	N/A	Packing, Case Cover	1
42	N/A	Camshaft Assembly	1
43	N/A	Pin, Dowel	2
44	N/A	Bolt	6
45	N/A	Gasket, Cylinder Head	1
46	N/A	Bolt	4
47	783127	Spark Plug	1
48	N/A	Rod, Push	2
49	N/A	Shroud	1
50	Kit # 1, Kit # 8, Kit # 11	Bolt	12
51	Kit # 8	Packing, Head Cover	1
52		Cover Comp, Cylinder Head	1

Ref#	Part #	Description	Qty
53	N/A	Wind Shield Comp.	1
54	Kit # 13	Bolt	1
55	N/A	Flywheel Assembly	1
56	Kit # 1	Fan, Recoil starter	1
57		Pulley, Starter	1
58		Nut	1
59	Kit # 9	Ignition Coil Assembly	1
60	N/A	Clip	2
61	Kit # 9, Kit # 13	Bolt	2
62	Kit # 7	Packing, Intake	1
63		Insulator, Carburetor	1
64		Packing, Carburetor	1
65		Spacer, Carburetor	1
66	Kit # 15	Rod, Governor	1
67		Spring, Throttle Return	1
68	Kit # 1	Recoil Starter Assembly	1
69	N/A	Shroud Assembly, Upper	1
70	N/A	Speed Regulating Handle	1
71	Kit # 2	Air Cleaner Assembly	1
72		Tube, Breather	1
73	N/A	Clip	1
74	Kit # 15	Spring, Governor	1
75	Kit # 5	Bolt	3
76	Kit # 6	Packing, Exhaust	1
77		Muffler	1
78	Kit # 5, Kit # 6	Nut	4
79	Kit # 6	Spring Washer	2
80	783136	Dipstick	1
81	Kit # 5	Fuel tank Assembly	1
81.1	Kit # 4, Kit # 5	Fuel Filter	1
82	789697, Kit # 5	Fuel Cock	1
83	Kit # 5	Spring Washer	3
84	Kit # 4, Kit # 5	Fuel tank cap comp	1
85	Kit # 5	Tank Vent Fitting	1
86		Non-Return Valve Sealing Ring	1
87	Kit # 3	Connecting pipe	1
88	Kit # 13	Starter Motor Assembly	1
89	Kit # 3, Kit # 14	Clip, Fuel Line	3
90	Kit # 11	Starter Control Box Assembly	1
91	Kit # 12	Positive Battery Cable	1
92		Negative Battery Cable	1
93	Kit # 13	Clamper Cord A	1
94		Charging Coil	1
95		Dustproof Sheet	1
96	Kit # 14	Connecting pipe	1
97		Carbon Canister	1
98		Clip, Fuel Line	1
N/A	789702	Replacement Key	1

Engine Kit Part List (15771120)-Rev E

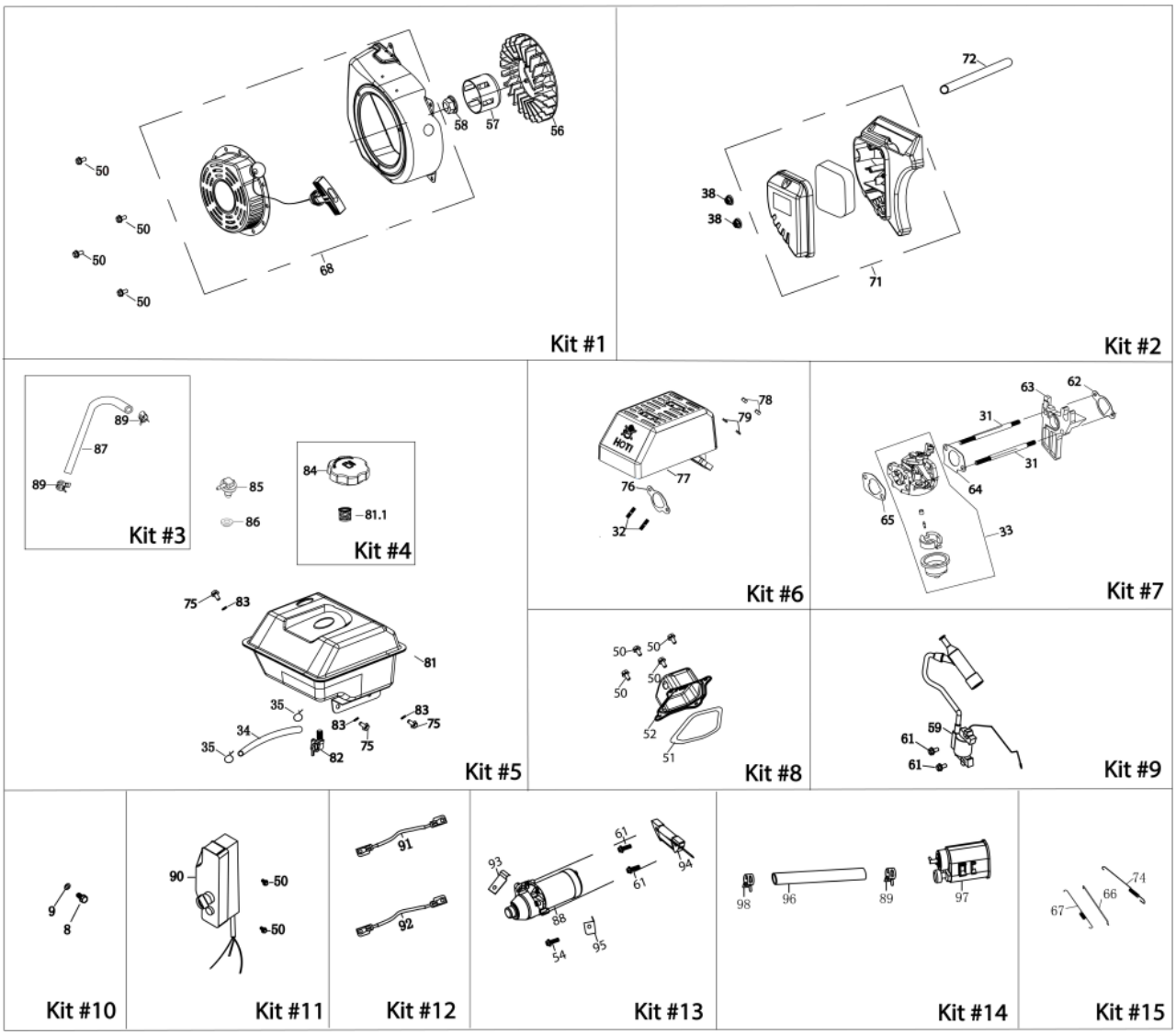

Kit Ref #	Kit Part #	Description	Qty
1	789698	Recoil & Fan Kit	1
2	789690	Air Filter Kit	1
3	790057	Vent Hose Kit	1
4	789262	Fuel Cap Kit	1
5	789692	Tank Kit	1
6	789693	Muffler Kit	1
7	789694	Carburetor Kit	1
8	789695	Valve Cover Kit	1
9	789696	Ignition Coil Kit	1
10	783126	Drain Bolt Kit	2
11	789699	Starter Control Box Kit (with key)	1
12	789700	Battery Cable Kit	1
13	789701	Starter Motor Kit	1
14	790058	Carbon Canister Kit	1
15	790161	Governor & Spring Kit	1

Engine Manual

Safety

CAUTION

- This engine is shipped without oil. If you start the engine without oil, the engine will be damaged beyond repair and will not be covered under warranty.

WARNING

Gasoline and its vapors are extremely flammable and explosive.
Fire or explosion can cause severe burns or death.

WHEN ADDING FUEL

- Turn engine OFF and let engine cool at least 2 minutes before removing gas cap.
- Fill fuel tank outdoors or in well-ventilated area.
- Do not overfill fuel tank.
- Keep gasoline away from sparks, open flames, pilot lights, heat, and other ignition sources.
- Check fuel lines, tank, cap, and fittings frequently for cracks or leaks. Replace if necessary.

WHEN STARTING ENGINE

- Make sure spark plug, muffler, fuel cap and air cleaner are in place.
- Do not crank engine with spark plug removed.
- If fuel spills, wait until it evaporates before starting engine.
- If engine floods, set choke to OPEN/RUN position, place throttle in FAST and crank until engine starts.

WHEN OPERATING EQUIPMENT

- Do not choke carburetor to stop engine.

WHEN TRANSPORTING EQUIPMENT

- Transport with fuel tank EMPTY.

WHEN STORING GASOLINE OR EQUIPMENT WITH FUEL IN TANK

- Store away from furnaces, stoves, water heaters or other appliances that have pilot light or other ignition source because they can ignite gasoline vapors.

WARNING

Starting engine creates sparking.
Sparking can ignite nearby flammable gases.
Explosion and fire could result.

- If there is natural or LP gas leakage in area, do not start engine.
- Do not use pressurized starting fluids because vapors are flammable.

WARNING

Rapid retraction of starter cord (kickback) will pull hand and arm toward engine faster than you can let go.
Broken bones, fractures, bruises or sprains could result.

- When starting engine, pull cord slowly until resistance is felt, then pull rapidly.
- Direct coupled equipment components such as, but not limited to, blades, impellers, pulleys, sprockets, etc., must be securely attached.

WARNING

Rotating parts can contact or entangle hands, feet, hair, clothing, or accessories.
Traumatic amputation or severe lacera-tion can result.

- Operate equipment with guards in place.
- Keep hands and feet away from rotating parts.
- Tie up long hair and remove jewelry.
- Do not wear loose-fitting clothing, dangling drawstrings or items that could become caught.

WARNING

Engines give off carbon monoxide, an odorless, colorless, poison gas.
Breathing carbon monoxide can cause nausea, fainting or death.

- Start and run engine outdoors.
- Do not start or run engine in enclosed area, even if doors or windows are open.

WARNING

Running engines produce heat. Engine parts, especially muffler, become extremely hot.
Severe thermal burns can occur on contact.
Combustible debris, such as leaves, grass, brush, etc. can catch fire.

- Allow muffler, engine cylinder and fins to cool before touching.
- Remove accumulated debris from muffler area and cylinder area.
- Install and maintain in working order a spark arrester before using equipment on forest-covered, grass-covered, brush-covered unimproved land. The state of California requires this. Other states may have similar laws. Federal laws apply on federal land.

Safety Precautions

⚠ WARNING

Before operating the engine, be sure to read and familiarize yourself with the manual, otherwise personal injury or equipment damage may result.

Pay special attention to the following:

1.) To prevent fire hazards and to provide adequate ventilation, keep engine at least 7 feet away from buildings and other equipment during operation. Do not place flammable objects close to the engine.
2.) Children and pets must be kept away from the area of operation due to a possibility of burns from hot engine components or injury from any equipment the engine may be used to operate.
3.) Know how to stop the engine quickly, and understand the operation of all controls. Never permit anyone to operate the engine without proper instructions.
4.) Gasoline is extremely flammable and is explosive under certain conditions.
5.) Refuel in a well-ventilated area with the engine stopped. Do not smoke or allow flames or sparks in the refueling area or where gasoline is stored.
6.) Do not overfill the fuel tank. After refueling, make sure the tank cap is closed properly and securely.
7.) Be careful not to spill fuel when refueling. Fuel vapor or spilled fuel may ignite. If any fuel is spilled, make sure the area is dry before starting the engine.
8.) Never run the engine in an enclosed or confined area. Exhaust contains poisonous carbon monoxide gas; exposure may cause loss of consciousness and may lead to death.
9.) The muffler becomes very hot during operation and remains hot for a while after stopping the engine. Be careful not to touch the muffler while it is hot. To avoid severe burns or fire hazards, let the engine cool before transporting or storing it indoors.

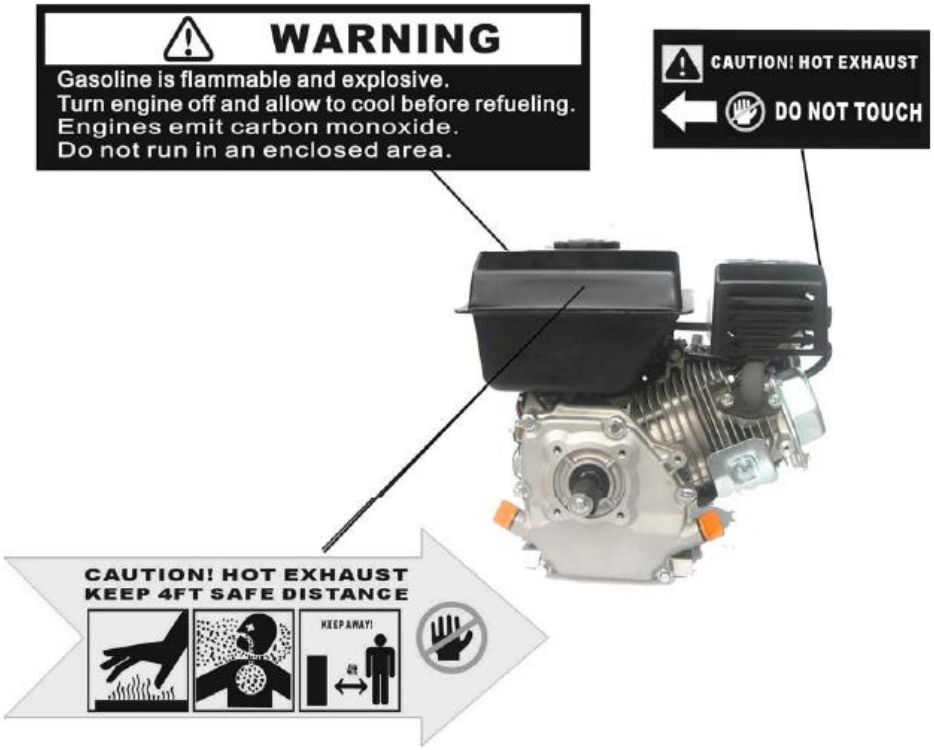

The main parts of engine are located as follows

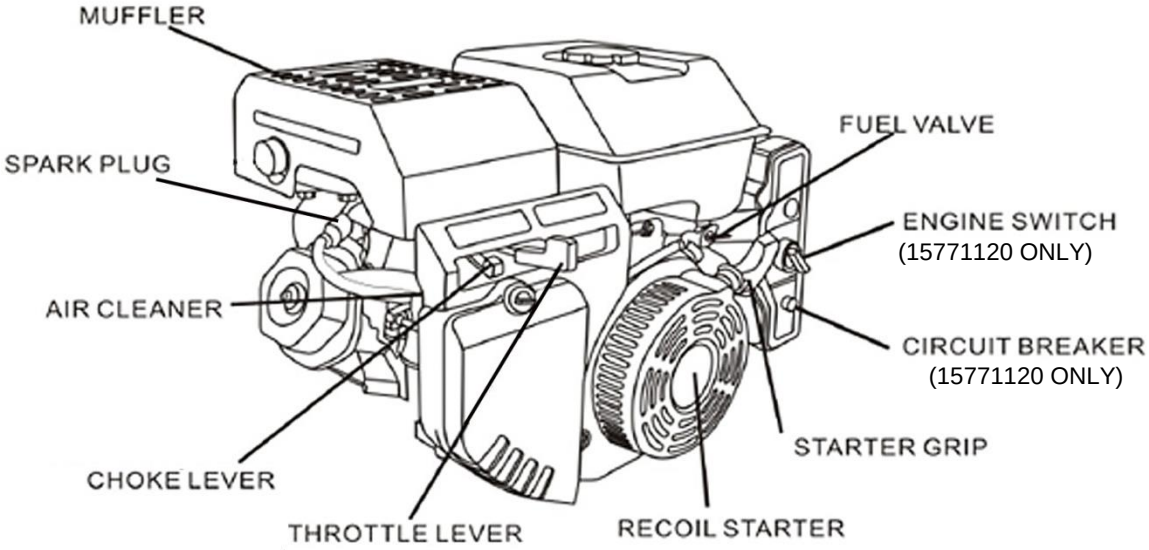

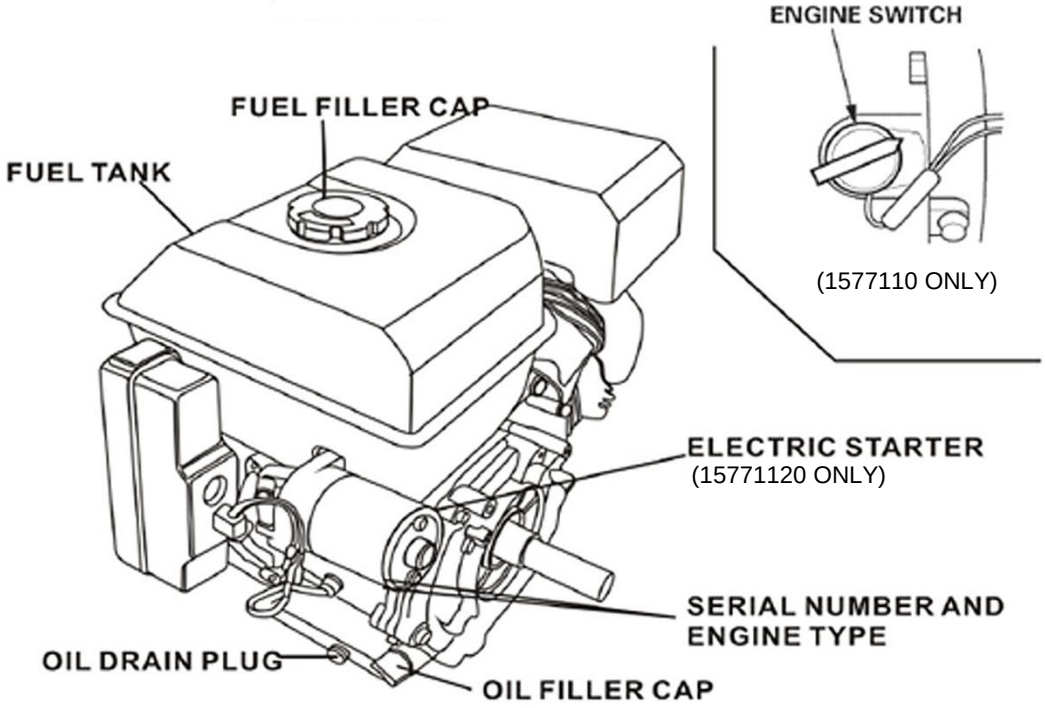

Battery Connection (Electric-Star Type)

Use a 12 volt battery with an ampere-hour rating of at least 18AH.

1. Connect the battery positive (+) cable to the starter solenoid terminal, as show.
2. Connect the battery negative (-) cable to an engine mounting bolt, frame bolt, or other good engine ground connection.
3. Check the battery cable connections to be sure the cables are secured and free of corrosion. Remove any corrosion and coat the terminals and cable ends with grease.

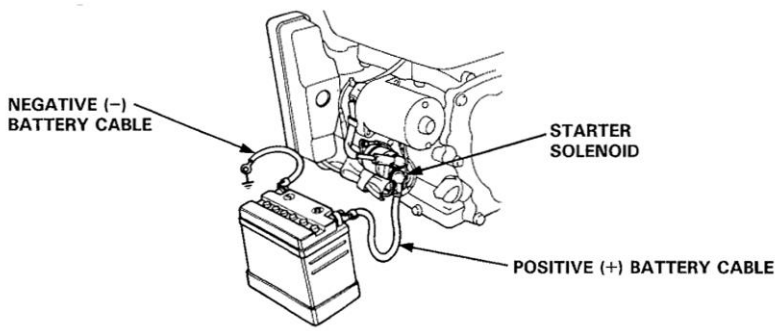

⚠ WARNING

- The battery may give off explosive gas; keep sparks, flames, and cigarettes away. Charge or use it in an area with good ventilation.
- The battery contains sulfuric acid (electrolyte). Contact with skin or eyes may cause severe burns. Wear protective clothing and face shield.
- If electrolyte gets on your skin, flush with water.
- If electrolyte gets in your eyes, flush with water for at least 15 minutes and call a physician immediately.
- Electrolyte is poisonous. If swallowed, drink large quantities of water or milk and follow with milk of magnesia or vegetable oil and call a physician.
- KEEP OUT OF REACH OF CHILDREN.

⚠ CAUTION

- Be careful not to connect the battery in reverse polarity, as this will short circuit the battery charging system.

CAUTION

- Engine oil is a major factor affecting engine performance and service life. Non-detergent oils and vegetable oils are NOT recommended. Be sure to check the engine oil level on a level surface with the engine stopped.

1. Engine Oil

SAE-10W-30 is recommended for general, all temperature use. Other viscosities shown in the chart may be used when the average temperature in your area is within the indicated range.

1.) Ensure that the engine is stopped and on level ground.
2.) Remove the oil filler cap and wipe the dipstick clean.
3.) Insert the dipstick into the oil filler neck but do not screw it in.
4.) If the level is low, fill to top of the oil filler neck with the recommended oil.
5.) Reinstall the dipstick.

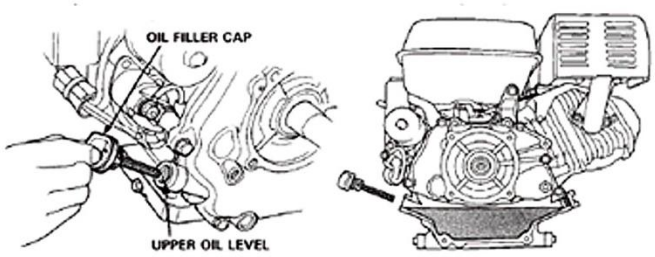

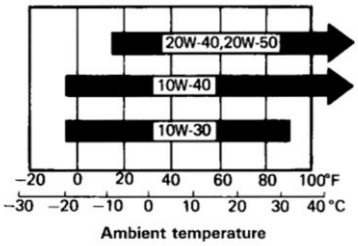

CAUTION

- Running the engine with insufficient oil can cause serious engine damage.

2. Air Cleaner

Dismantle the air cleaner housing and check its filter element, make sure it is clean and intact, otherwise clean or replace the filter.

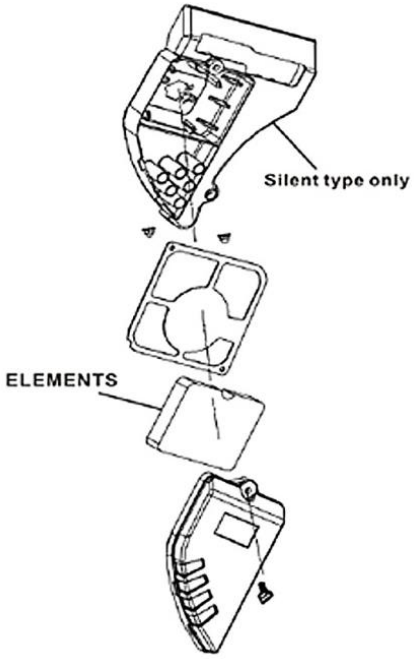

CAUTION

- Never run the engine without the air cleaner. Rapid engine wear will result from contaminates, such as dust and dirt, being drawn through the carburetor and into the engine.

3. Fuel and Fuel Tank

Fuel

- Your engine is designed to use FRESH, UNLEADED GAS WITH AN OCTANE RATING OF 87 OR HIGHER.
- Unleaded gasoline is recommended because it produces fewer engine and spark plug deposits and extends the life of exhaust system components.
- Never use stale or contaminated gasoline or an oil/gasoline mixture. Avoid getting dirt, dust or water in the fuel tank.

1.) Remove the fuel filler cap and check fuel level.
2.) If the fuel level is too low, refuel the tank.
3.) Do not overfill.

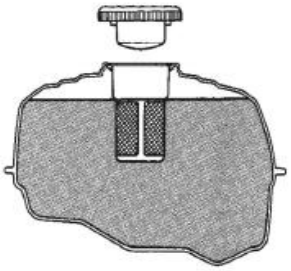

Gasoline Containing Alcohol

If you decide to use gasoline containing alcohol (gasohol), be sure its octane rating is at least as high as that recommended by Powerhorse. There are two types of "gasohol". One contains ethanol, the other contains methanol.

⚠ WARNING

- Gasoline is extremely flammable and is explosive under certain conditions.
- Refuel in a well-ventilated area with the engine stopped. Do not smoke or allow flames or sprats in the area where the engine is refueled or where gasoline is stored.
- Do not overfill the fuel tank (there should be no fuel in the filler neck). After refueling, make sure the tank cap is closed properly and securely.
- Be careful not to spill fuel when refueling. Spilled fuel or fuel vapor may ignite. If any fuel is spilled, make sure the area is dry before starting the engine.
- Avoid repeated or prolonged contact with skin or breaking of vapor.
- KEEP OUT OF REACH OF CHILDREN.

- DO NOT use gasohol that contains more than 10% ethanol.
- Do not use gasoline containing methanol (Methyl or Wood Alcohol) that does not also contain cosolvents and corrosion inhibitors for methanol.
- Never use gasoline containing more than 5% methanol, even if it has cosolvents and corrosion inhibitors.

If "spark knock" or "pinging" occurs at a steady engine speed under normal load, change brands of gasoline. If spark knock or pinging persists, consult an authorized Powerhorse dealer. If this continues, it could result in engine damage.

Fuel Tank Capacity: 208cc (3 Liters) (0.79 Gallons)

Starting the Engine

1. Push the fuel valve to the “ON” position.

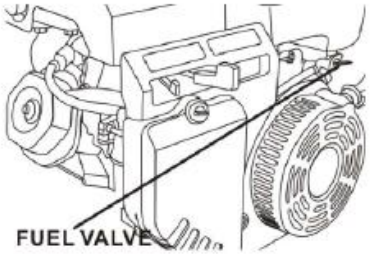

2. Move the Choke Lever to the “CLOSED” position.

Note: if the engine is hot, closing the choke is not necessary.

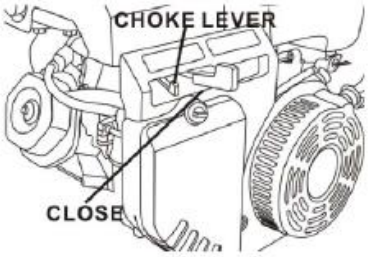

3. Move the throttle lever slightly to the left.

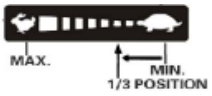

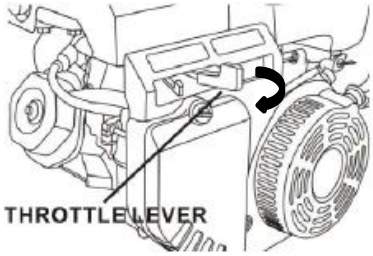

4. Start the engine.

Recoil Start

a. Turn engine switch to the “ON” position.
b. Pull the starter grip towards your shoulder, until you feel it catch, then pull briskly.

⚠ CAUTION

- Releasing the handle suddenly and allowing the starter grip to hit the engine may cause damage to the starter. Return it gently to prevent damage.

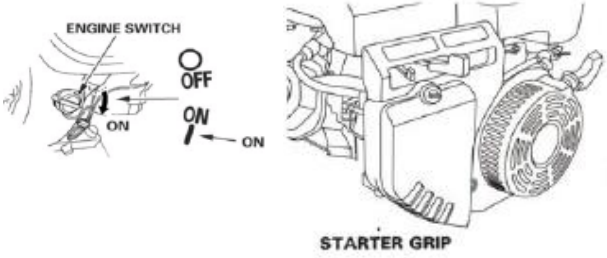

With Electric Start

a. Turn the engine switch to the “START” position and hold it until the engine starts.
b. Once engine starts, release the engine switch to “On”.

⚠ CAUTION

- Do not use the electric starter for more than 5 seconds or motor damage may occur. If the engine fails to start, release the switch and wait 10 seconds before operating the starter again.

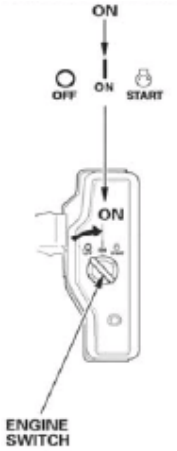

Stopping the Engine

In emergency, push the engine switch to “OFF” to stall the engine; to stop it in normal, do so as follows:

1.) Push the throttle lever to the right.
2.) Turn the engine switch to the “OFF” position.
3.) Turn the fuel valve to the “OFF” position.

⚠ CAUTION

- Sudden stopping at high speed under heavy load is not recommended. Engine damage may result.

High Altitude Operation

At high altitude, the standard carburetor air-fuel mixture will be excessively rich. Performance will decrease, and fuel consumption will increase.

High altitude performance can be improved by installing a smaller diameter main fuel jet in the carburetor and re-adjusting the pilot screw. If you always operate the engine at altitudes high than 6,000 feet above sea level, have your Powerhorse dealer perform these carburetor modifications.

Even with suitable carburetor jetting, engine horsepower will decrease approximately 3.5% for each 1,000 foot increase in altitude. The effect of altitude on horsepower will be greater than this if no carburetor modifications are made.

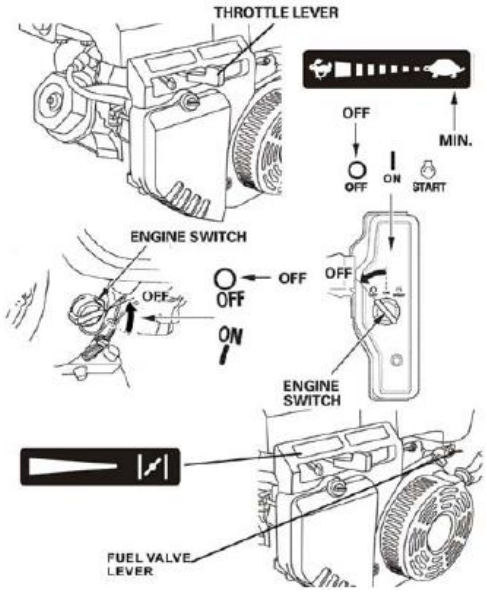

⚠ CAUTION

- Operation of the engine at an altitude lower than the carburetor is jetted for, may result in reduced performance, overheating, and serious engine damage caused by excessively lean air/fuel mixture.

Exhaust Control System

While the engine is running, carbon monoxide, oxide of nitrogen and hydrocarbon will produce, and in certain conditions, oxide of nitrogen and hydrocarbon will react with each other chemically and create a toxic carbon monoxide.

1. Maintenance
   Maintain the engine periodically in accordance with the maintenance schedule. The maintenance schedule has been created based on normal use and normal conditions. If using heavy load, operating in dusty and wet conditions, or in extreme temperatures, service of the engine should be done more frequent.
2. Replacement of Parts
   It’s recommended that you should choose parts which are manufactured by Powerhorse. Using a lower standards or an incompatible part may impair the exhaust control system.

Exhaust Control System (cont'd)

3. Modifying
   Modifying the exhaust control system may affect the exhaust emissions to the point where it exceeds legal limits.
   Illegal modification such as:
   a.) Dismantling or modification of air intake or exhaust system.
   b.) Modification of takeoff speed-adjustment connection device or speed-adjustment device to result in the engines running beyond pre-set parameters.
4. Problems Affecting Exhaust Emissions
   a.) Difficult starting or difficult stopping.
   b.) Unstable idling.
   c.) Puffs of black smoke or excessive fuel consumption.
   d.) Poor ignition sparks or sparks returned.

Should you experience any of the problems listed above, please contact your Powerhorse dealer.

Maintenance

MAINTENANCE SCHEDULE						
Frequency Item		Each Time	First Month of 20 Hrs	Each Season or 50 Hrs	Every 6 Months or 100 Hrs	Each Year or 300 Hrs
Engine Oil	Oil level check	✓				
	Replace		✓			
Air Cleaner	Check	✓				
	Clean			✓ ①	✓ ②*	
	Replace					✓ **
Sediment Cup	Clean				✓	
Spark Plug	Clean, Adjust				✓	
	Replace					✓
Spark Eliminator	Clean				✓	
Idling	Check, Adjust					✓ ②
Valve Clearance	Check, Adjust					✓ ②
Fuel Tank & Fuel Filter	Clean					✓ ②
Fuel Supply Line	Check	Every two years (do a replacement if necessary)				

* Only for inside-ventilated double core-carburetors.
** Only for paper core air cleaners. Every two years or 600 hours for dust collecting air cleaners.
① Service engine more frequent if used in dusty conditions.
② Should be done by your Powerhorse dealer, unless you are trained and equipped with the proper tools.

⚠ WARNING

- Shut off the engine before performing any maintenance. If the engine must run, make sure the area is well ventilated. The exhaust contains poisonous carbon monoxide gas.

⚠ CAUTION

- Use replacement parts from a Powerhorse dealer or equivalent source; otherwise damage may result.

Change engine oil

While engine is still hot, drain all engine oil out from the crankcase.

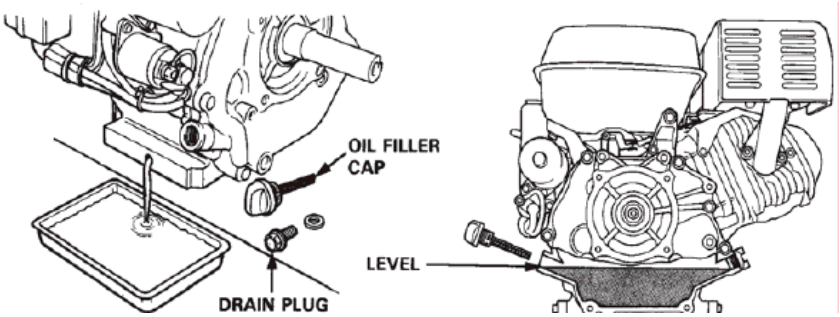

1.) Remove the oil filler cap and drain plug to drain oil
2.) Install the drain plug and tighten it securely.
3.) Refill with the recommended oil and check the oil level.
4.) Install the oil filler cap.

Note: Please dispose of used motor oil in a manner that is compatible with the environment. Do not throw in trash or pour on the ground.

Air Filter

A dirty air cleaner may block air flowing into the carburetor. To keep the carburetor in good working condition, service the air filter periodically. If operating engine in a dusty environment, it should be cleaned frequently.

1.) Remove the wing nut and the air cleaner cover. Remove the element and separate them. Carefully check element for holes or tears and replace if damaged.
2.) Clean element with household detergents and warm water, rinse thoroughly. Allow element to dry completely.
3.) Soak element in clean engine oil and squeeze out the excess oil. Engine will smoke during initial start- up if too much oil is left on foam.
4.) Reinstall the filter element and air cleaner housing.

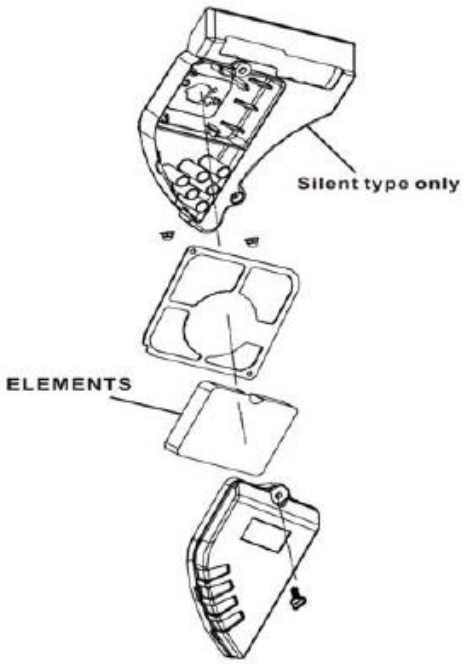

⚠ CAUTION

- Never run the engine without an air cleaner. Dirt and dust may enter the engine and cause it to ware.

Sediment Cup Cleaning

Turn the fuel valve to "OFF". Remove the sediment cup and o-ring and wash them in nonflammable or high flash point solvent. Dry them thoroughly and reinstall securely. Turn the fuel valve on and check for leaks.

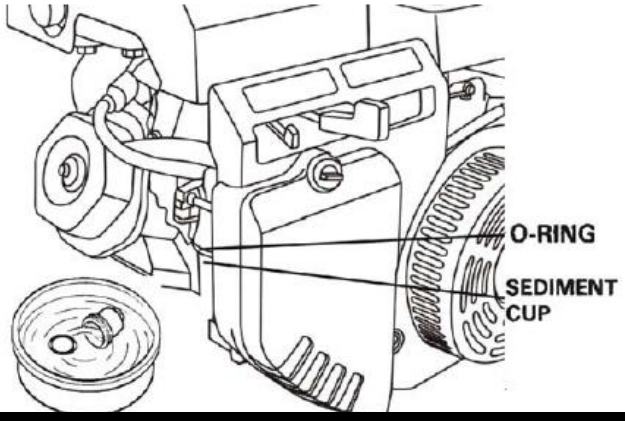

WARNING

- Gasoline is extremely flammable and is explosive under certain conditions. Do not smoke or allow flames or sparks in the area.
- If any fuel is spilled, make sure the area is dry before testing the spark plug or starting the engine. Fuel vapor or spilled fuel may ignite.

Spark Plug

CAUTION

- Never use a spark plug of incorrect heat range.

WARNING

- If the engine has been running, the muffler will be very hot. Be careful not to touch the muffler.

Recommended Spark Plug:

To ensure the proper engine operation, the spark plug must be properly gapped and free of deposits.

1. Remove the spark plug cap and use a spark plug wrench to remove the plug.

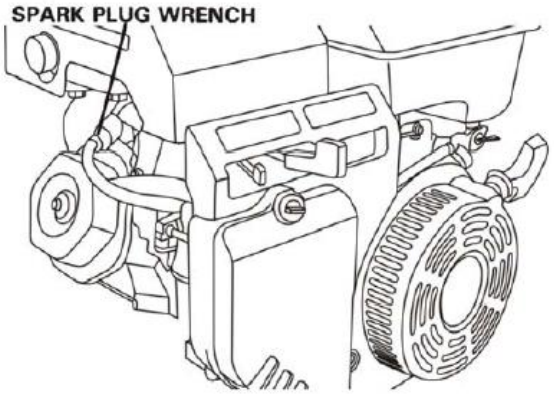

2. Visually inspect the spark plug. Discard if the insulator is cracked or chipped. Clean the spark plug with a wire brush if it is to be reused.
3. Measure the plug gap with a feeler or gauge. The gap should be .07-.08mm (0.028-0.031 in). Correct as necessary by bending the side electrode.

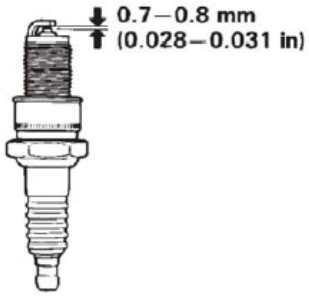

4. Check that the spark plug washer is in good condition and thread the spark plug in by hand to prevent cross-threading. If spark plug is damaged, replace with a new one.
5. After the spark plug is seated, tighten with a spark plug wrench to compress the washer.

   NOTE: When installing a new spark plug, tighten ½ turn after the spark plug seats to compress the washer. When reinstalling a used spark plug, tighten 1/8-1/4 turn after the spark plug seats to compress the washer.

⚠ CAUTION

- The spark plug must be securely tightened. An improperly tightened spark plug can become very hot and may damage the engine.

Idling Adjustment

1. Start the engine and allow it to warm up to normal operating temperature.
2. With the engine idling, turn the pilot screw in or out to the setting that produces the highest idle rpm. Standard idling will be 1500 ± 150 rpm.

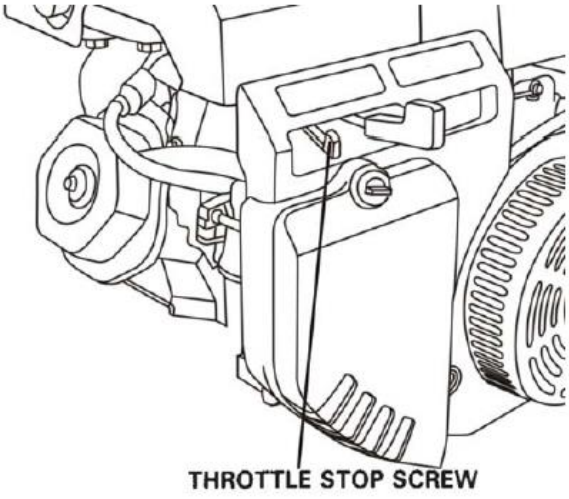

Transport, Storage, and Removal from Storage

Transport

Transport with the fuel vale turned to the “OFF” position. Only store the engine when it has cooled off to

> **⚠ CAUTION**
>
> - Do not tilt engine, keep engine at a level position to prevent fuel spillage. Fuel vapor or spilled fuel may ignite.

avoid fires or burns.

Storage

Before Storing Engine

Before storing the unit for an extended period:

1. Be sure the storage area is free of excessive humidity and dust.
2. Drain the fuel.
    a. With the fuel valve in the “OFF” position, remove and empty the sediment cup.
    b. Turn the fuel valve to the “ON” position and drain the gasoline from the fuel tank into a suitable container.
    c. Replace the sediment cup and tighten securely.
    d. Draing the carburetor by loosening the drain screw. Drain the gasoline into a suitable container.

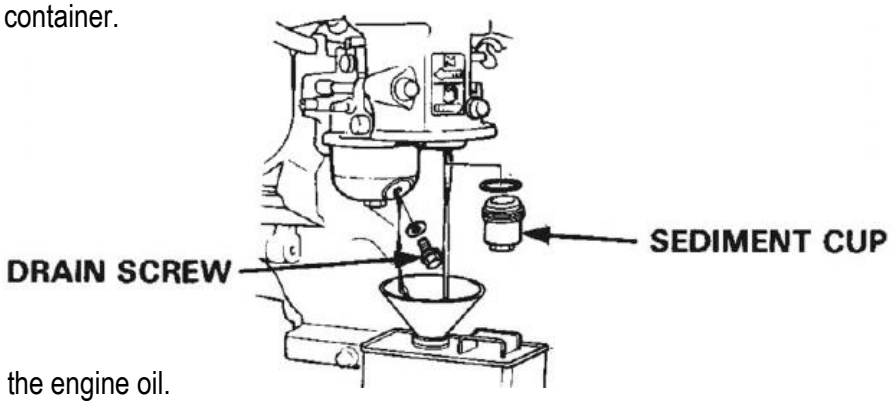

3. Change the engine oil.
4. Remove the spark plug and pour about a tablespoon of clean engine oil into the cylinder. Crank the engine several revolutions to distribute the oil, then reinstall the spark plug.
5. Pull the starter rope slowly until resistance is felt. Continue pulling until the notch on the starter pully aligns with the hole on the recoil starter. See illustration below. At this point, the intake and exhaust valves are closed, and this will help to protect the engine from internal corrosion.

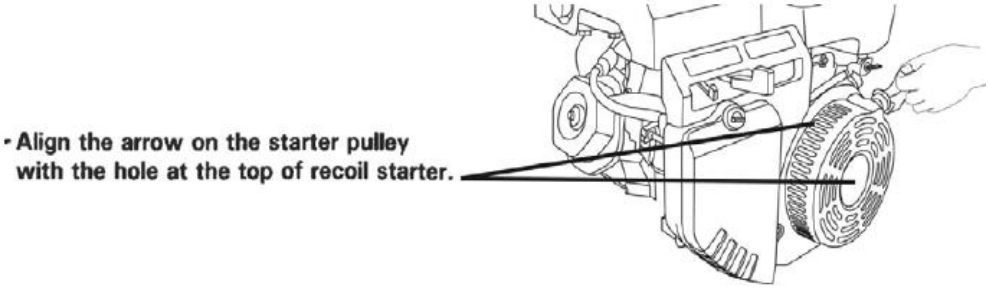

6. Electric starter type: Remove the battery and store it in a cool, dry place. Recharge it once a month.
7. Cover the engine to keep out dust.

Transport, Storage, and Removal from Storage (cont'd)

Removing From Storage

Before reusing, service the engine.

STORAGE TIME	SERVICE
1-2 Months	• Drain out any old fuel in tank and refuel with fresh gasoline.
2 Months +	• Drain out any old fuel in tank and refuel with fresh gasoline. • Drain fuel from carburetor. • Empty sediment cup.

Note: Please dispose of fuel in a manner that is compatible with the environment. Do not throw in trash or pour on the ground.

⚠ WARNING

- Fuel is extremely flammable and explosive under certain conditions. Keep cigarette, open flames and sparks away from operating site.

Engine Specifications

	Powerhorse 208cc
Engine Type	4-Stroke, OHV, Single Cyl., Forced Air Cooled
Bore x Stroke (mm)	70 x 54
Rated Power (kW/rpm)	4.2/3600
Max Torque	13.2
Displacement (ml)	208
Starting Type	Recoil
Ignition Type	Induction Ignition
Lubricating Type	Splashing
Dry Weight	35.3 lbs
Dimension (L x W x H)	16.54 x 14.96 x 15.75

Troubleshooting

Trouble	Cause	Remedy
Engine will not start using recoil starter.	1. Is the engine switch in the “ON” position? 2. Is the fuel valve “ON”? 3. Is there fuel in the fuel tank? 4. Is gasoline reaching the carburetor? 5. Is there spark at the plug?	1. See “Starting Engine” Section. 2. See “Starting Engine” Section. 3. See “Pre-Operating Instructions.” 4. To check, loosen the drain screw with the fuel valve on. See “Storage” Section for instructions. 5. Remove the spark plug cap, clean, then remove spark plug. Install plug in cap, turn engine switch to “ON” position. Ground the side electrode to any engine ground, and pull the recoil starter to see if sparks jump across the gap. If nto spark, replace plug. If OK, reinstall spark plug and try to start engine again.
Engine will not start using electric starter.	1. Are the battery cables securely connected and free of corrosion? 2. Is the battery fully charged?	1. See “Battery Connection” Section. 2. Charge battery.
Engine shut down while running.	1. Engine out of fuel? 2. Is the carburetor clogged? 3. Is the spark plug bad?	1. Refuel. 2. See “Maintenance” Section. 3. See “Maintenance” Section.
Abnormal Noise or Pinging	1. Does the fuel have an octane rating of 87 or higher?	1. Change brands of fuel.

Wiring Diagram

With Oil Alert and Electric Starter

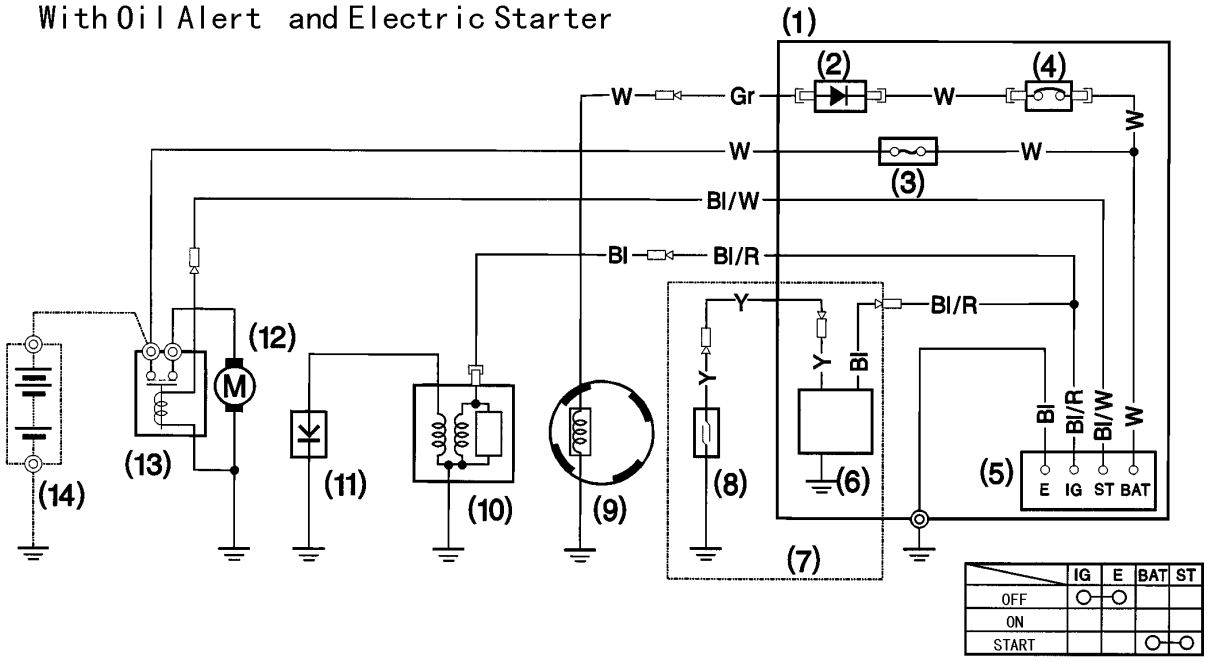

With Oil Alert and Without Electric Starter

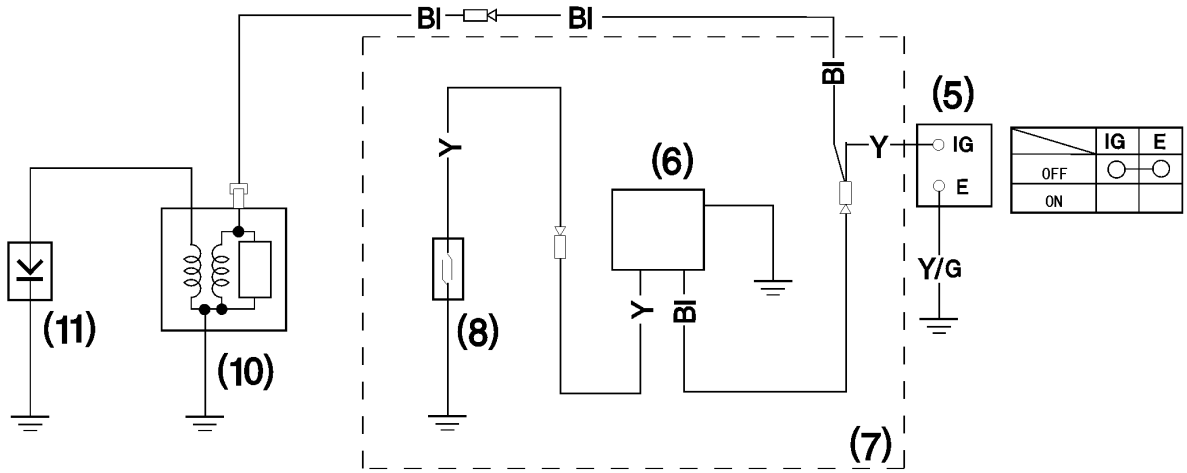

(1) CONTROL BOX
(2) RECTIFIER
(3) FUSE
(4) CIRCUIT BREAKER
(5) ENGINE SWITCH
(6) OIL ALERT UNIT
(7) TYPE WITH OIL ALERT UNIT
(8) OIL LEVEL SWITCH
(9) CHARGING COIL
(10) IGNITION COIL
(11) SPARK PLUG
(12) STARTER MOTOR
(13) STARTER SOLENOID
(14) BATTERY (12 V)

Bl	Black	Br	Brown
Y	Yellow	O	Orange
Bu	Blue	Lb	Light blue
G	Green	Lg	Light green
R	Red	P	Pink
W	White	Gr	Gray

Note: The diagram for other types may be different with the exception of electric-start type.

Limited Warranty

Dear Valued Customer:

The Powerhorse Product you just purchased is built with the finest material and craftsmanship. Use this product properly and enjoy the benefits from its high performance. By purchasing a Powerhorse product, you show a desire for quality and durability. Like all mechanical equipment this unit requires a due amount of care. Treat this unit like the high quality piece of machinery it is. Neglect and improper handling may impair its performance. Please thoroughly read the instructions and understand the operation before using your product. Always contact Powerhorse Product Support at 1-866-443-2576 prior to having any service or warranty work performed, as some services performed by parties other than Powerhorse approved service centers may void this warranty. This warranty is in lieu of any other warranty expressed or implied and Powerhorse assumes no other responsibility or liability outside that expressed within this warranty.

Limited Warranty

Powerhorse shall warranty any piece of equipment manufactured, or parts of equipment manufactured, to be free from defects in material or workmanship for a period of:

Powerhorse Warranty		
Item #	**Consumer Warranty Period**	**Commercial Warranty Period**
1577110 15771120	2 years from date of purchase by user	90 days from date of purchase by user

"Consumer use" means personal residential household use by a consumer. "Commercial use" means all other uses, including use for commercial, income producing or rental purposes or when purchased by a business.

This warranty applies to the original purchaser of the equipment (verification of purchase, in the form of a receipt, is the responsibility of the buyer), is non-transferable, and covers parts and labor. Parts will be replaced or repaired at no charge, except when the equipment has failed due to lack of proper maintenance. If a part is no longer available, the part may be replaced with a similar part of equal function. Any misuse, abuse, alteration or improper installation or operations will void warranty. Determining whether a part is to be replaced or repaired is the sole decision of Powerhorse. Powerhorse will not provide for replacement of complete products due to defective parts. Any costs incurred due to replacement or repair of items outside of a Powerhorse approved facility is the responsibility of the buyer and not covered under warranty. Transportation costs to and from service center is the responsibility of the customer.

In addition to the normal warranty, Powerhorse shall warrant any normal wear item from defects in material or workmanship for a period of 90 days from the date of purchase by user. Normal wear items include, but are not limited to, nozzles, quick connect fittings, valves, seals, hoses, springs, O-rings, unloader valves and filter elements.

This warranty specifically excludes the following; failure of parts due to damage caused by accident, fire, flood, windstorm, acts of God, applications not approved by Powerhorse in writing, corrosion caused by chemicals, use of replacement parts which do not conform to manufacturer's specifications, damage related to rodent and/or insect infestation and damage caused by vandalism. Additional exclusions: loss of running time, inconvenience, loss of income, or loss of use, including any implied warranty of merchantability of fitness for a specific use. Also, Outdoor Power Equipment needs periodic parts and service to perform well, and this warranty does not cover instances when normal use has exhausted the life of a component or the engine.

This warranty does not cover any personal injury or damage to surrounding property caused by failure of any part. Repair or replacement of parts does not extend the warranty period.

The engine warranty is covered under the same terms and conditions as outlined above. Normal engine maintenance such as spark plugs, air filters, adjustments, fuel system cleaning and obstruction due to build up is not covered by this Powerhorse warranty.

Please fill in the following information and have it on hand when you call in on a warranty claim.

Customer Number: _____

Date of Purchase: _____

Powerhorse Serial Number: _____

Item Number: _____

CALIFORNIA EMISSIONS CONTROL WARRANTY STATEMENT
YOUR WARRANTY RIGHTS AND OBLIGATIONS

The California Air Resources Board and Northern Tool & Equipment Company, Inc., Ltd., are pleased to explain the emissions control system warranty on your 2013 and later small off-road engine (SORE). In California, new SORE must be designed, built and equipped to meet the State's stringent anti-smog standards. Northern Tool & Equipment Company, Inc., must warrant the emissions control system on your SORE for the periods of time listed below provided there has been no abuse, neglect or improper maintenance of your SORE.

Your emission control system may include parts such as the carburetor, fuel tanks, fuel caps, fuel lines, the ignition system, and catalytic converter. Also included may be hoses, belts, clamps, connectors and other emission-related assemblies.

Where a warrantable condition exists, Northern Tool & Equipment Company, Inc., will repair your small off-road engine at no cost to you including diagnosis, parts and labor.

MANUFACTURER'S WARRANTY COVERAGE:

The emissions control system is warranted for two years. If any emissions-related part on your engine is defective, the part will be repaired or replaced by Northern Tool & Equipment Company, Inc.

OWNER'S WARRANTY RESPONSIBILITIES:

As the SORE owner, you are responsible for the performance of the required maintenance listed in your owner's manual. Northern Tool & Equipment Company, Inc., recommends that you retain all receipts covering maintenance on your SORE, but Northern Tool & Equipment Company, Inc., can not deny warranty solely for the lack of receipts or for your failure to ensure the performance of all scheduled maintenance.

As the SORE owner, you should however be aware that Northern Tool & Equipment Company, Inc., may deny your warranty coverage if your SORE or a part has failed due to abuse, neglect, improper maintenance or unapproved modifications.

You are responsible for presenting your SORE to a distribution center or service center authorized by Northern Tool & Equipment Company, Inc., as soon as the problem exists. The warranty repairs should be completed in a reasonable amount of time, not to exceed 30 days.

If you have any questions regarding your warranty coverage, you should contact Northern Tool & Equipment Company, Inc.:

Tell: 1-866-443-2576, or visit: www.northerntool.com.

DEFECTS WARRANTY COVERAGE

Adopted by the Air Resources Board, Northern Tool & Equipment Company, Inc., warrants to the ultimate purchaser and each subsequent purchaser that the small off-road engine (SORE) (1) has been designed, built and equipped so as to conform with all applicable regulations; and

(2) is free from defects in materials and workmanship that cause the failure of a warranted part to conform with those regulations as may be applicable to the terms and conditions stated below.

(a)The warranty period begins on the date the engine is delivered to an ultimate purchaser or first placed into service. The warranty period is two years.

(b)Subject to certain conditions and exclusions as stated below, the warranty on emissions related parts is as follows:

(1)Any warranted part that is not scheduled for replacement as required maintenance in your ***Owner's Manual*** is warranted for the warranty period stated above. If the part fails during the period of warranty coverage, the part will be repaired or replaced by Northern Tool & Equipment Company, Inc., according to Subsection (4) below. Any such part repaired or replaced under warranty will be warranted for the remainder of the period.

(2)Any warranted part that is scheduled only for regular inspection in your ***Owner's Manual*** is warranted for the warranty period stated above. Any such part repaired or replaced under warranty will be warranted for the remaining warranty period.

(3)Any warranted part that is scheduled for replacement as required maintenance in your ***Owner's Manual*** is warranted for the period of time before the first scheduled replacement date for that part. If the part fails before the first scheduled replacement, the part will be repaired or replaced by Northern Tool & Equipment Company, Inc., according to Subsection (4) below. Any such part repaired or replaced under warranty will be warranted for the remainder of the period prior to the first scheduled replacement point for the part.

(4)Repair or replacement of any warranted part under the warranty provisions herein must be performed at a warranty station at no charge to the owner.

(5)Notwithstanding the provisions herein, warranty services or repair will be provided at all of our distribution centers that are franchised to service the subject engines.

(6) The engine owner must not be charged for diagnostic labor that leads to the determination that a warranted part is in fact defective, provided that such diagnostic work is performed at a warranty station.

(7) Northern Tool & Equipment Company, Inc., is liable for damages to other engine components proximately caused by a failure under warranty of any warranted part.

(8)Throughout the engine warranty period stated above, Northern Tool & Equipment Company, Inc., will maintain a supply of warranted parts sufficient to meet the expected demand for such parts.

(9) Any replacement part may be used in the performance of any warranty maintenance or repairs and must be provided without charge to the owner. Such use will not reduce the warranty obligations of Northern Tool & Equipment Company, Inc.,

(10)Add-on or modified parts that are not exempted by the Air Resources Board may not be used. The use of any non-exempted add-on or modified parts by the ultimate purchaser will be grounds for disallowing a warranty claim. Northern Tool & Equipment Company, Inc., will not be liable to warrant failures of warranted parts caused by the use of a non-exempted add-on or modified part.

(11) The manufacturer issuing the warranty shall provide any documents that describe that manufacturer's warranty procedures or policies within five working days of request by the Air Resources Board.

EMISSION WARRANTY PARTS LIST

The repair or replacement of any warranted part otherwise eligible for warranty coverage may be excluded from such warranty coverage if Northern Tool & Equipment Company, Inc., demonstrates that the engine has been abused, neglected, or improperly maintained, and that such abuse, neglect, or improper maintenance was the direct cause of the need for repair or replacement of the part. That notwithstanding, any adjustment of a component that has a factory installed, and properly operating, adjustment limiting device is still eligible for warranty coverage. The following emissions warranty parts for each engine family list is covered.

For engine families: DCDPS.1401GB, DCDPS.2081DJ, DCDPS.1961DJ and DCDPS.4202DJ:

(1)Fuel Metering System:
- (a)Gasoline carburetor assembly and its internal components
- (b)Carburetor gaskets
- (c) Fuel tank
- (f) Fuel Line
- (g) Fuel Line Fittings
- (h) Clamps

(2) Air Induction System including:
- (a)Intake pipe/manifold
- (b)Air cleaner

(3)Ignition System including:
- (a)Spark plug
- (b)Ignition coil

(4)Catalytic Muffler Assembly including:
- (a)Muffler gasket
- (b)Exhaust manifold
- (c)Catalytic converter

(5)Crankcase Breather Assembly including:
- (a) Breather connection tube.

(6) Fuel tank evaporative emissions control system including:
- (a) Purge Valves
- (b) Carbon Canister
- (c) Canister Mounting Brackets
- (d) Fuel Cap

(7)Miscellaneous items Used in Above Systems including:
- (a) Switches
- (b) Hoses, belts, connectors, and assemblies.

(8)Air injection system
- (a) Pulse

The warranty is provided in accordance with the "California Emisson Control Warranty Statement."

This Page Left Intentionally Blank

POWERHORSE®

Assembled by
Northern Tool & Equipment Company, Inc.
Burnsville, MN 55306
NorthernTool.com