This .pdf document is bookmarked

# Operating Instructions and Parts Manual
# 5 x 6-inch Horizontal Band Saw
## Model HBS-56S
For use with machines with Serial Numbers 06080307 and higher

**WALTER MEIER (Manufacturing) Inc.**

427 New Sanford Road
LaVergne, Tennessee 37086
Ph.: 800-274-6848
www.waltermeier.com

**Part No. M-414457A**
Revision C1 12/09
Copyright © 2009 Walter Meier (Manufacturing) Inc.

# Warranty and Service

Walter Meier (Manufacturing) Inc., warrants every product it sells. If one of our tools needs service or repair, one of our Authorized Service Centers located throughout the United States can give you quick service. In most cases, any of these Walter Meier Authorized Service Centers can authorize warranty repair, assist you in obtaining parts, or perform routine maintenance and major repair on your JET® tools. For the name of an Authorized Service Center in your area call 1-800-274-6848.

**MORE INFORMATION**

Walter Meier is consistently adding new products to the line. For complete, up-to-date product information, check with your local Walter Meier distributor, or visit waltermeier.com.

**WARRANTY**

JET products carry a limited warranty which varies in duration based upon the product (MW = Metalworking, WW = Woodworking).

| 90 DAY WARRANTY | 1 YEAR WARRANTY | | 2 YEAR WARRANTY | 3 YEAR WARRANTY | | 5 YEAR WARRANTY | | | LIFE LIFETIME WARRANTY |
|---|---|---|---|---|---|---|---|---|---|
| Lathe Accessories | Air Tools-Contractor | Body Repair Kits | Palet Trucks | WW Benchtop Tools | Beam Clamps | WW Drill Presses | | | Fastening Tools |
| Machine Accessories | Air Tools-Industrial | Bottle Jacks | Rigging Equip. | | Chain Hoist-Manual | WW Dust Collectors | | | Mechanics Hand Tools |
| Mobile Bases | Air Tools-Light Industrial | Cable Pullers | Service Jacks | | Lever Hoists | WW Dust Filters | | | Striking Tools |
| Safety Equipment | Lubrication | Cold Saws | Stackers | | Pullers-JCH Models | WW Dust Fittings | | | Vises (no -precision) |
| Specialty Items | | Hoists-Air | Surface Grinders | | Scissor Lift Tables | WW Jointers | | | Clamps |
| Vise Accessories | | Hoists-Electric | Tapping | | Screw Jacks | WW Lathes | | | |
| | | Metal forming | Trolleys-Air | | Trolleys-Geared | WW Planers | WW Shapers | | |
| | | Mill/Drills | Trolleys-Electric | | Trolleys-Plain | WW Sanders | WW Tablesaws | | |
| | | Milling Machines | Web Slings | | Winches-Manual | | | | |
| | | MW Bandsaws | Winches-Electric | | WW Air Filtration | | | | |
| | | MW Drill Presses | | | WW Bandsaws | | | | |
| | | MW Finishing Equipment | | | WW Buffers | | | | |
| | | MW Lathes | | | | | | | |
| | | MW Precision Vises | | | | | | | |

*Warranty reverts to 1 Year Warranty if woodworking (WW) products listed above are used for industrial or educational purposes.*

**WHAT IS COVERED?**

This warranty covers any defects in workmanship or materials subject to the exceptions stated below. Cutting tools, abrasives and other consumables are excluded from warranty coverage.

**WHO IS COVERED?**

This warranty covers only the initial purchaser of the product.

**WHAT IS THE PERIOD OF COVERAGE?**

The general JET warranty lasts for the time period specified in the product literature of each product.

**WHAT IS NOT COVERED?**

Five Year Warranties do not cover woodworking (WW) products used for commercial, industrial or educational purposes. Woodworking products with Five Year Warranties that are used for commercial, industrial or education purposes revert to a One Year Warranty. This warranty does not cover defects due directly or indirectly to misuse, abuse, negligence or accidents, normal wear-and-tear, improper repair or alterations, or lack of maintenance.

**HOW TO GET SERVICE**

The product or part must be returned for examination, postage prepaid, to a location designated by us. For the name of the location nearest you, please call 1-800-274-6848.

You must provide proof of initial purchase date and an explanation of the complaint must accompany the merchandise. If our inspection discloses a defect, we will repair or replace the product, or refund the purchase price, at our option. We will return the repaired product or replacement at our expense unless it is determined by us that there is no defect, or that the defect resulted from causes not within the scope of our warranty in which case we will, at your direction, dispose of or return the product. In the event you choose to have the product returned, you will be responsible for the shipping and handling costs of the return.

**HOW STATE LAW APPLIES**

This warranty gives you specific legal rights; you may also have other rights which vary from state to state.

**LIMITATIONS ON THIS WARRANTY**

WALTER MEIER (MANUFACTURING) INC., LIMITS ALL IMPLIED WARRANTIES TO THE PERIOD OF THE LIMITED WARRANTY FOR EACH PRODUCT. EXCEPT AS STATED HEREIN, ANY IMPLIED WARRANTIES OR MERCHANTABILITY AND FITNESS ARE EXCLUDED. SOME STATES DO NOT ALLOW LIMITATIONS ON HOW LONG THE IMPLIED WARRANTY LASTS, SO THE ABOVE LIMITATION MAY NOT APPLY TO YOU.

WALTER MEIER SHALL IN NO EVENT BE LIABLE FOR DEATH, INJURIES TO PERSONS OR PROPERTY, OR FOR INCIDENTAL, CONTINGENT, SPECIAL, OR CONSEQUENTIAL DAMAGES ARISING FROM THE USE OF OUR PRODUCTS. SOME STATES DO NOT ALLOW THE EXCLUSION OR LIMITATION OF INCIDENTAL OR CONSEQUENTIAL DAMAGES, SO THE ABOVE LIMITATION OR EXCLUSION MAY NOT APPLY TO YOU.

Walter Meier sells through distributors only. The specifications in Walter Meier catalogs are given as general information and are not binding. Members of Walter Meier reserve the right to effect at any time, without prior notice, those alterations to parts, fittings, and accessory equipment which they may deem necessary for any reason whatsoever. JET® branded products are not sold in Canada by Walter Meier.

# Table of Contents


Warranty and Service....2
Table of Contents....3
Warning....4
Introduction....6
Specifications....6
Shipping Contents....7
  Contents of the Carton....7
  Hardware....7
Assembly of Stand....8
Assembly of Band Saw....9
  Mounting Band Saw to Stand....9
  Pulley Cover and Belt Installation....9
  Stock Stop....10
Grounding Instructions....11
  General Information....11
  Conversion to 230 Volt....12
  Extension cords....12
Adjustments....12
  Squaring Vise to Blade (90° Stop)....12
  Setting 45° Stop....13
  Setting Downfeed Rate....13
  Miter Cuts....14
  Blade Tension....15
  Blade Tracking....15
  Setting Blade Speed....15
  Belt Tension....16
  Blade Guide Assembly....16
  Guide Bearings....16
  Blade Replacement....17
  Automatic Shut-Off....17
  Switch Lock-Out....17
  Vertical Bow Position....18
Operation....18
  115 Volt Operation....11
  Positioning the Vise....13
Maintenance....19
Troubleshooting....20
Parts....20
  Replacement Parts....20
  Parts List: HBS-56S Band Saw....21
  Bow Assembly....25
  Base and Cabinet Assembly....28
Electrical Connections....29

# Warnings

1. Read and understand the entire owner's manual before attempting assembly or operation.
2. Read and understand the warnings posted on the machine and in this manual. Failure to comply with all of these warnings may cause serious injury.
3. Replace the warning labels if they become obscured or removed.
4. This band saw is designed and intended for use by properly trained and experienced personnel only. If you are not familiar with the proper and safe operation of a band saw, do not use until proper training and knowledge have been obtained.
5. Do not use this band saw for other than its intended use. If used for other purposes, Walter Meier (Manufacturing) Inc., disclaims any real or implied warranty and holds itself harmless from any injury that may result from that use.
6. Always wear approved safety glasses/face shields while using this band saw. Everyday eyeglasses only have impact resistant lenses; they are not safety glasses.
7. Before operating this band saw, remove tie, rings, watches and other jewelry, and roll sleeves up past the elbows. Remove all loose clothing and confine long hair. Non-slip footwear or anti-skid floor strips are recommended. Do **not** wear gloves.
8. Wear ear protectors (plugs or muffs) during extended periods of operation.
9. Some dust created by power sanding, sawing, grinding, drilling and other construction activities contain chemicals known to cause cancer, birth defects or other reproductive harm. Some examples of these chemicals are:

   - Lead from lead based paint.
   - Crystalline silica from bricks, cement and other masonry products.
   - Arsenic and chromium from chemically treated lumber.

   Your risk of exposure varies, depending on how often you do this type of work. To reduce your exposure to these chemicals, work in a well-ventilated area and work with approved safety equipment, such as face or dust masks that are specifically designed to filter out microscopic particles.
10. Do not operate this machine while tired or under the influence of drugs, alcohol or any medication.
11. Make certain the switch is in the **OFF** position before connecting the machine to the power supply.
12. Make certain the machine is properly grounded.
13. Make all machine adjustments or maintenance with the machine unplugged from the power source.
14. Remove adjusting keys and wrenches. Form a habit of checking to see that keys and adjusting wrenches are removed from the machine before turning it on.
15. Keep safety guards in place at all times when the machine is in use. If removed for maintenance purposes, use extreme caution and replace the guards immediately.
16. Check damaged parts. Before further use of the machine, a guard or other part that is damaged should be carefully checked to determine that it will operate properly and perform its intended function. Check for alignment of moving parts, binding of moving parts, breakage of parts, mounting and any other conditions that may affect its operation. A guard or other part that is damaged should be properly repaired or replaced.
17. Provide for adequate space surrounding work area and non-glare, overhead lighting.
18. Keep the floor around the machine clean and free of scrap material, oil and grease.
19. Keep visitors a safe distance from the work area. **Keep children away.**

# Warnings

20. Make your workshop child proof with padlocks, master switches or by removing starter keys.
21. Give your work undivided attention. Looking around, carrying on a conversation and “horse-play” are careless acts that can result in serious injury.
22. Maintain a balanced stance at all times so that you do not fall or lean against the blade or other moving parts. Do not overreach or use excessive force to perform any machine operation.
23. Use the right tool at the correct speed and feed rate. Do not force a tool or attachment to do a job for which it was not designed. The right tool will do the job better and safer.
24. Use recommended accessories; improper accessories may be hazardous.
25. Maintain tools with care. Keep blades sharp and clean for the best and safest performance. Follow instructions for lubricating and changing accessories.
26. Make sure the work piece is securely clamped in the vise. Never use your hand to hold the work piece.
27. Turn off the machine before cleaning. Use a brush or compressed air to remove chips or debris — do not use your hands.
28. Do not stand on the machine. Serious injury could occur if the machine tips over.
29. Never leave the machine running unattended. Turn the power off and do not leave the machine until the blade comes to a complete stop.
30. Remove loose items and unnecessary work pieces from the area before starting the machine.

**Familiarize yourself with the following safety notices used in this manual:**

**⚠CAUTION** This means that if precautions are not heeded, it may result in minor injury and/or possible machine damage.

**⚠WARNING** This means that if precautions are not heeded, it may result in serious injury or possibly even death.

## - - SAVE THESE INSTRUCTIONS - -

# Introduction

This manual is provided by Walter Meier (Manufacturing) Inc., covering the safe operation and maintenance procedures for a JET Model HBS-56S Horizontal Band Saw. This manual contains instructions on installation, safety precautions, general operating procedures, maintenance instructions and parts breakdown. This machine has been designed and constructed to provide years of trouble free operation if used in accordance with instructions set forth in this manual. If there are any questions or comments, please contact either your local supplier or Walter Meier. Walter Meier can also be reached at our web site: www.waltermeier.com.

# Specifications

| | |
|---|---|
| Model Number | HBS-56S |
| Stock Number | 414457 |
| Round Capacity at 90° (in.) | 5 |
| Round Capacity at 45° (in.) | 2-3/4 |
| Rectangle Capacity at 90° (in.) | 5 x 6 |
| Rectangle Capacity at 45° (in.) | 2-3/4 x 4 |
| Throat Depth (in.) | 5 |
| Vise Swivels (deg.) | 0 to 60 |
| Blade Size (in.) | 1/2 |
| Blade Wheel Diameter (in.) | 7-1/2 |
| Blade Speeds (SFPM) | 80, 120 and 200 |
| Bed Height (in.) | 29-3/4 |
| Motor | TEFC, 1/2HP, 1Ph, 115/230V (pre-wired 115V) |
| Overall Dimensions (L x W x H)(in.) | 41.3 x 18.1 x 22 |
| Net Weight (lbs.) | 172 |
| Shipping Weight (lbs.) | 176 |

The above specifications were current at the time this manual was published, but because of our policy of continuous improvement, Walter Meier reserves the right to change specifications at any time and without prior notice, without incurring obligations.

# Shipping Contents

Open carton and check for shipping damage. Report any damage immediately to your distributor and shipping agent. Do not discard any shipping material until the band saw is assembled and running properly.

## Contents of the Carton

1 Band Saw (not shown)
1 Belt Guard (A)
1 Side Plate - left (B)
1 Side Plate - right (C)
1 Front Door (D)
1 Wheel Base (E)
1 Plate - bottom (F)
2 Feet (G)
1 Front Door Knob (H)
1 Belt Guard (J)
2 Wheels (K)
1 Handle (L)
1 V-Belt (M)
1 Work Stop Assembly (N)
1 Axle (O)
1 Chip Pan (P)
1 Owner's Manual (not shown)
1 Warranty Card (not shown)

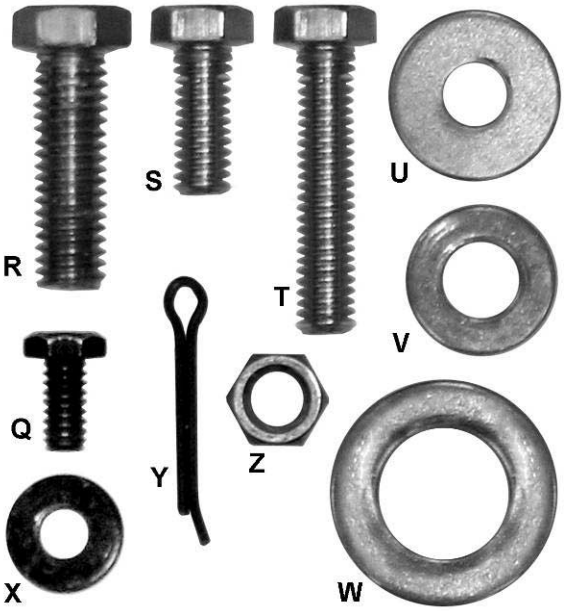


*Hardware (Actual Size)*

Compare the contents of your container with the following parts list to make sure all parts are intact. Missing parts, if any, should be reported to your distributor. Read the instruction manual thoroughly for assembly, maintenance and safety instructions.

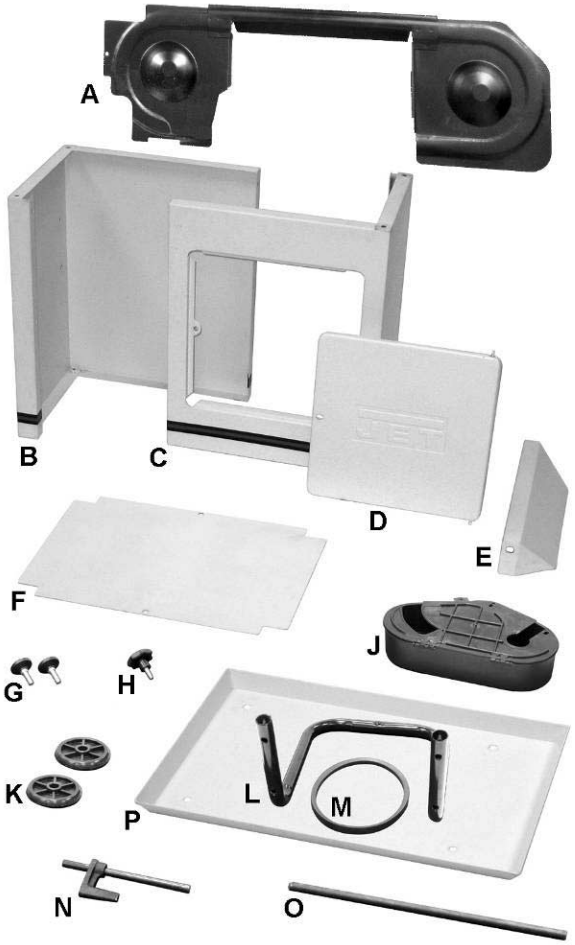


*Contents of the Carton*

## Hardware

2 1/4” x 1/2” Hex Cap Screw (Q)
4 3/8" x 1-1/4" Hex Cap Screw (R)
12 5/16” x 3/4” Hex Cap Screw (S)
4 5/16” x 1-1/2” Hex Cap Screw (T)
33 5/16” Flat Washers (U)
4 10 x 23 x t2 Flat Washer (V)
4 5/8” x 30 x t3 Flat Washer (W)
2 1/4" Flat Washer (X)
2 3x25 Cotter Pin (Y)
16 5/16” Hex Nut (Z)
1 3/16” x 1/2" Cross Point Round Head Screw (not shown)
1 3/16” Hex Nut (not shown)
1 5/16” Nylon Nut (not shown)

**⚠WARNING** **Read and understand the entire contents of this manual before attempting set-up or operation! Failure to comply may cause serious injury.**

# Assembly of Stand

*Tools required for assembly:*

Two 1/2-inch wrench (**Note:** A ratchet wrench may speed assembly time.)

1. Assemble left (A) and right (B) *side plates* with six 5/16"x3/4" *hex cap screws* ($C_1$), twelve 5/16" *flat washers* ($D_1$) and six 5/16" *hex nuts* ($E_1$). Tighten the hex nuts.
2. Turn the assembly (from Step 1) on its back (door opening up) and mount the *bottom plate* (F) with two 5/16"x3/4" *hex cap screws* ($C_2$), four 5/16" *flat washers* ($D_2$) and two 5/16" *hex nuts* ($E_2$). Tighten the hex nuts.
3. Install the two *rubber feet* (G) on the bottom of the *left plate* (A).
4. Turn the assembly upside down and install the *wheel base* (H) with four 5/16"x3/4" *hex cap screws* ($C_3$), eight 5/16" *flat washers* ($D_3$) and four 5/16" *hex nuts* ($E_3$).
5. Insert the *axle* (J) through the holes of the *wheel base* (H).
6. Install a *wheel* (K) and two 5/8"x30 *flat washers* (L) on each end of the axle. Insert *cotter pins* (M) through holes on each end of the axle and bend the ends of the cotter pins to secure the wheel on the axle.
7. Install the *handle* (N) to the left *side plate* (A) with four 5/16"x1-1/2" *hex cap screws* (O), four 5/16" *flat washers* ($D_4$) and four 5/16" *hex nuts* ($E_4$). Tighten the hex nuts.
8. Install the *door* (P). The upper hinge pin is spring loaded and must be retracted to mount the door to the cabinet.
9. Install the door lock knob with a 5/16" *flat washer* ($D_5$) and 5/16" *nylon nut* (R).

Installation of the *chip pan* (R) is described in *Mounting Band Saw to Stand* on the following page.

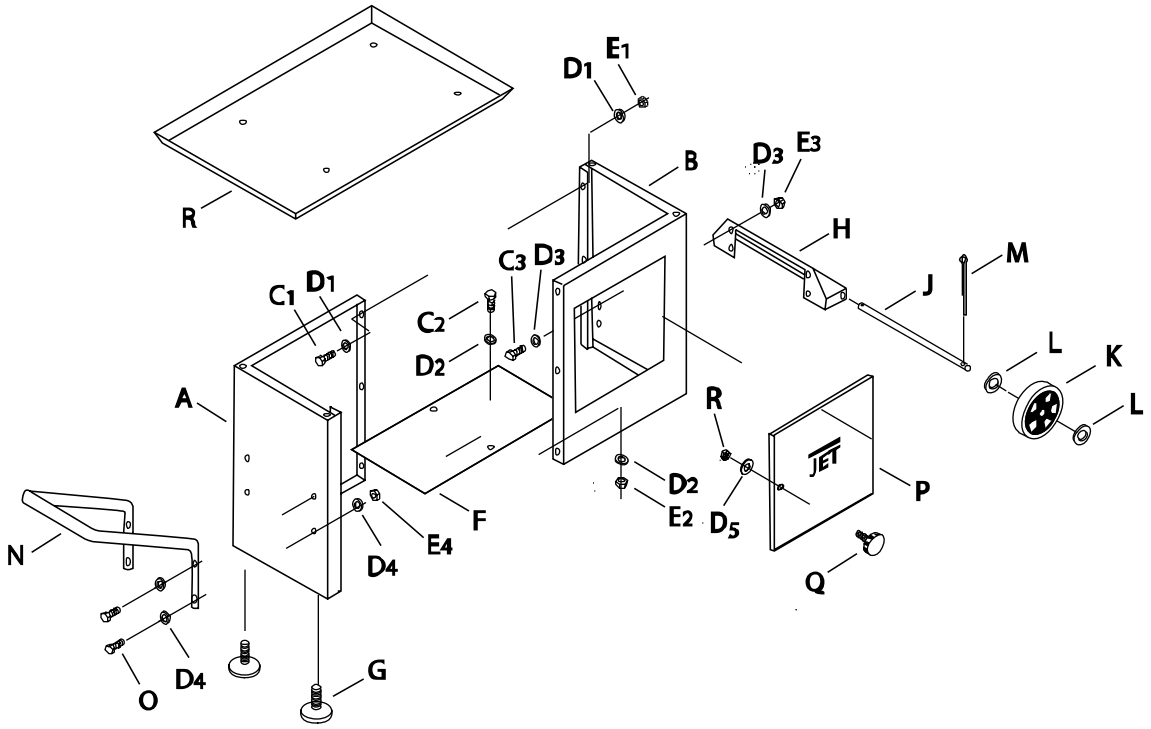


*Figure 1*

# Assembly of Band Saw

*Tools required for assembly:*

– cross point (Phillips) screwdriver
– 3mm and 4mm hex wrenches (provided)
– 1/2" and 9/16" wrenches

Remove any plastic or holding straps from around the band saw. Areas of the machine have been given a protective coating at the factory. This should be removed using a soft cloth moistened with kerosene or a cleaner-degreaser. Do not use gasoline, paint thinner, or lacquer thinner as these will damage painted surfaces. Do not use an abrasive pad.

## Mounting Band Saw to Stand

Referring to Figure 2:

1. Place the *chip pan* (D) on the *stand* (E). The side with the mounting holes further from the edge (F) must be towards the left.
2. Using an assistant, place the *band saw* (C) onto the stand on top of the *chip pan* (D).
3. Align the holes at the four corners of the *saw* and *chip pan* with the holes in the *stand*. Make sure the front of the band saw faces the same direction as the JET logo on the stand (see photo on cover of this manual).
4. Install a 3/8"x1-1/4" *hex cap screw* (A) with 10 x 23 x t2 *flat washer* (B) in each of the four holes. Tighten the hex cap screws with a 1/2" wrench.

Remove the *bracket* and *two screws* (not shown) which secured the bow during shipment. Retain these items in case they are needed for future transporting of the band saw.

**⚠CAUTION When moving the band saw the cutting head, or "bow", should be in the down position.**

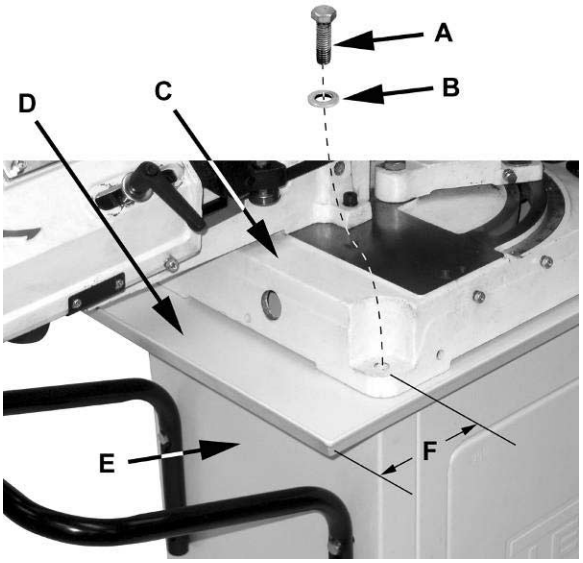


*Figure 2*

## Pulley Cover and Belt Installation

1. The knob (A, Figure 3) should be loosened so that the motor is allowed to drop freely.
2. Slide the pulley cover down over the pulley shafts as shown in Figure 3. (Slide it onto the gearbox pulley shaft first, then the motor pulley shaft.)
3. Secure the pulley cover with two 1/4-20 x 1/2" hex cap screws and flat washers (B, Figure 3) using a 10mm wrench. Use the slots to adjust the guard so that it will not interfere with the pulleys.

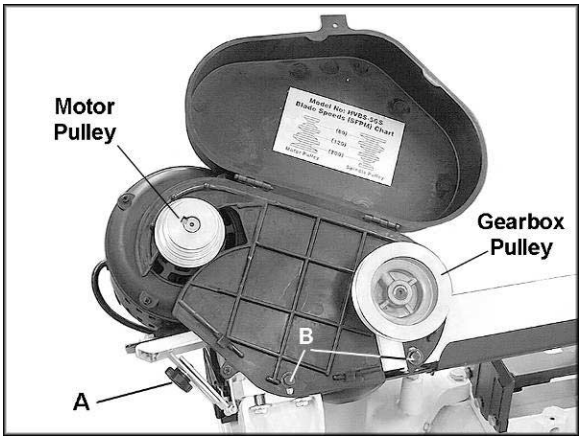


*Figure 3*

4. Lift up on the motor and install the belt around the pulley grooves, as shown in Figure 4. Allow the motor to drop back down, then push it down farther to tension the belt. (For further information on belt tension and belt position on the grooves, see page 15.)
5. Tighten the knob (A, Figure 3).
6. Close the pulley cover and secure it with the pan head screw and hex nut.

*Figure 4*

## Stock Stop

The stock stop is used for making multiple cuts of the same length.

1. Insert the stock stop rod (A, Figure 5) into the hole at the front of the base as shown.
2. Secure the rod by tightening the socket set screw (B, Figure 5) with a 3mm hex wrench.
3. The stock stop is moved along the rod by loosening the socket set screw (C, Figure 5) with a 4mm hex wrench. The stock stop can be reversed on the rod to accept slightly longer lengths of workpieces. Tighten the socket set screw (C, Figure 5) when the stock stop is positioned as desired.

The stock stop will mount into the hole at the front or the back of the band saw, depending upon the angle of cut being made (explained more fully under “Miter Cuts”).

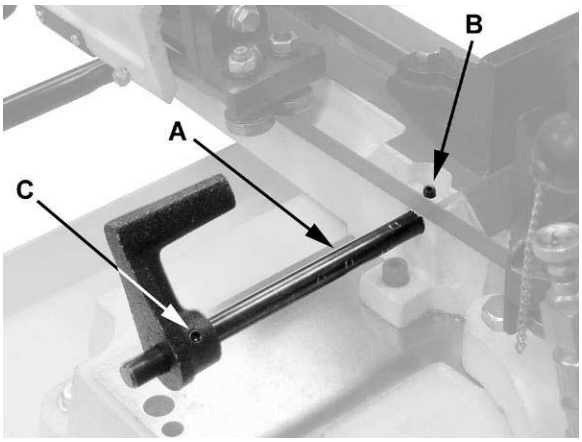


*Figure 5*

# Grounding Instructions

## General Information

**⚠WARNING Electrical connections must be made by a qualified electrician in compliance with all relevant codes. This machine must be properly grounded to help prevent electrical shock and possible fatal injury.**

This machine must be grounded. In the event of a malfunction or breakdown, grounding provides a path of least resistance for electric current to reduce the risk of electric shock.

This band saw is pre-wired for 115 volt and is equipped with an electric cord having an equipment-grounding conductor and a grounding plug similar to that shown in Figure 6. The plug must be inserted into a matching outlet that is properly installed and grounded in accordance with all local codes and ordinances.

Do not modify the plug provided. If it will not fit the outlet, have the proper outlet installed by a qualified electrician.

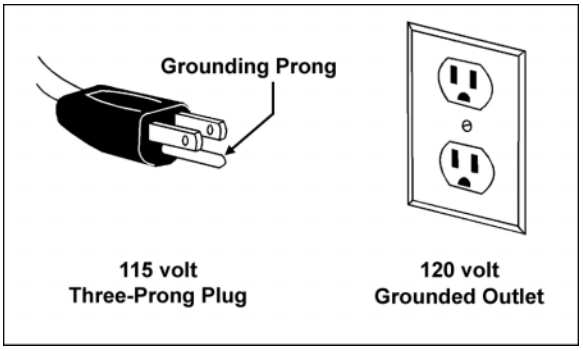


*Figure 6*

Improper connection of the equipment-grounding conductor can result in a risk of electric shock. The conductor, with insulation having an outer surface that is green with or without yellow stripes, is the equipment-grounding conductor. If repair or replacement of the electric cord or plug is necessary, do not connect the equipment-grounding conductor to a live terminal.

Check with a qualified electrician or service personnel if the grounding instructions are not completely understood, or if in doubt as to whether the machine is properly grounded. Use only three wire extension cords that have three-prong grounding plugs and three-pole receptacles that accept the machine's plug.

## 115 Volt Operation

As received from the factory, your band saw is ready to operate at 115 volt power, using an outlet and a plug that look similar to those illustrated in Figure 6.

A temporary adapter, which looks like the adapter illustrated in Figure 7, may be used to connect this plug to a two-pole receptacle as shown, if a properly grounded outlet is not immediately available. The temporary adapter should **only be used until a properly grounded outlet can be installed by a qualified electrician.**

The green colored rigid ear, lug or tab, extending from the adapter must be connected to a permanent ground such as a properly grounded outlet box, as shown in Figure 7.

Check with a qualified electrician or service personnel if the grounding instructions are not completely understood, or if in doubt as to whether the tool is properly grounded.

Make sure the voltage of your power supply matches the specifications on the motor plate of the Band Saw.

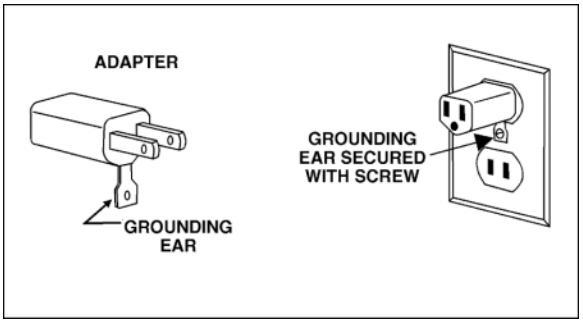


*Figure 7*

## Conversion to 230 Volt

If 230 volt operation is desired, the following instructions must be followed:

1. Disconnect machine from power source.
2. Open the switch box and connect the leads according to the wiring diagram inside the switch box. This diagram is also shown on page 26 of this manual.
3. The 115V attachment plug supplied with the band saw must be replaced with a UL listed plug suitable for 230 volt operation, similar to the one shown in Figure 8. Contact your local authorized Walter Meier service center or qualified electrician for proper procedures to install the plug. The band saw must comply with all local and national codes after the 230 volt plug is installed.
4. Close the switch box
5. The band saw with a 230 volt plug should only be connected to an outlet having the same configuration (Figure 8). No adapter is available or should be used with the 230 volt plug.

## Extension cords

If an extension cord is necessary, make sure the cord rating is suitable for the amperage listed on the machine's motor plate. An undersize cord will cause a drop in line voltage resulting in loss of power and overheating.

Use the chart in Figure 9 as a general guide in choosing the correct size cord. If in doubt, use the next heavier gauge. The smaller the gauge number, the heavier the cord.

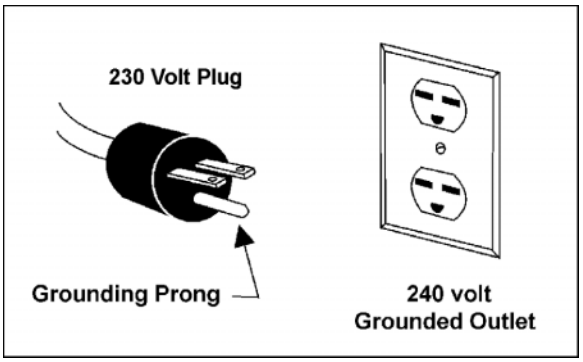


*Figure 8*

**Recommended Gauges (AWG) of Extension Cords**

| Amps | Extension Cord Length * | | | | | |
|---|---|---|---|---|---|---|
| | 25 feet | 50 feet | 75 feet | 100 feet | 150 feet | 200 feet |
| < 5 | 16 | 16 | 16 | 14 | 12 | 12 |
| 5 to 8 | 16 | 16 | 14 | 12 | 10 | NR |
| 8 to 12 | 14 | 14 | 12 | 10 | NR | NR |
| 12 to 15 | 12 | 12 | 10 | 10 | NR | NR |
| 15 to 20 | 10 | 10 | 10 | NR | NR | NR |
| 21 to 30 | 10 | NR | NR | NR | NR | NR |

*based on limiting the line voltage drop to 5V at 150% of the rated amperes.
*NR: Not Recommended*

*Figure 9*

# Adjustments

## Squaring Vise to Blade (90° Stop)

For accurate cutting, the vise jaws should be square to the blade. Inspect as follows:

1. Loosen the handle (A, Figure 10) and make sure the bow is swiveled enough that the stop screw (B, Figure 10) is contacting the fixed screw (C, Figure 10).
2. Place a machinist's square on the bed against the blade and the fixed jaw of the vise, as shown in Figure 10. The square should lie along the entire length of the jaw and blade without a gap.

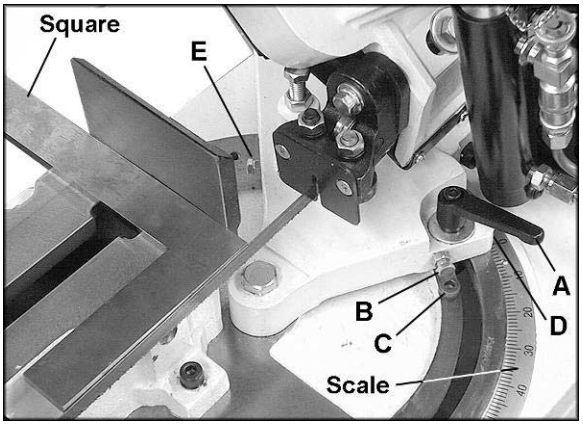


*Figure 10*

3. If the vise and blade are not square, loosen the hex nut on the stop screw (B, Figure 10) with a 10mm wrench and rotate the stop screw as needed until the vise and blade are square whenever the stop screw is contacting the socket head cap screw (C, Fig 10).

4. If the vise and blade are square but the pointer (D, Figure 10) is off slightly, loosen the screw and adjust the pointer until it lines up with zero on the scale. Tighten the screw.

**Note**: The handle (A, Figure 10) is adjustable. Simply lift up on the handle and rotate it on the pin. Release the handle, making sure it seats itself properly on the pin.

## Setting 45° Stop

Swivel the bow to the 45° angle. Use a machinist's protractor or similiar 45° device to check the blade's angle to the vise.

If adjustment is needed, loosen the hex nut on the 45° stop (E, Figure 10) and rotate the screw as needed with a 10mm wrench. When satisfied, tighten the hex nut.

## Setting Downfeed Rate

The downfeed rate of the blade is important to band saw performance. Excessive pressure of blade against the workpiece may break the blade or stall the saw. In contrast, insufficient pressure rapidly dulls the blade.

Turn the valve lever (F, Figure 11) parallel to the hydraulic cylinder (K, Figure 11) to lower the bow. The rate of downfeed is adjusted by the dial (G, Figure 11).

The stop screw (H, Figure 11) prevents the blade from contacting the base after the cut. It has been adjusted at the factory. If future adjustment is ever needed, loosen the hex nut (J, Figure 11) with a 14mm wrench and rotate the screw (H, Figure 11) as needed, then re-tighten the hex nut (J, Figure 11).

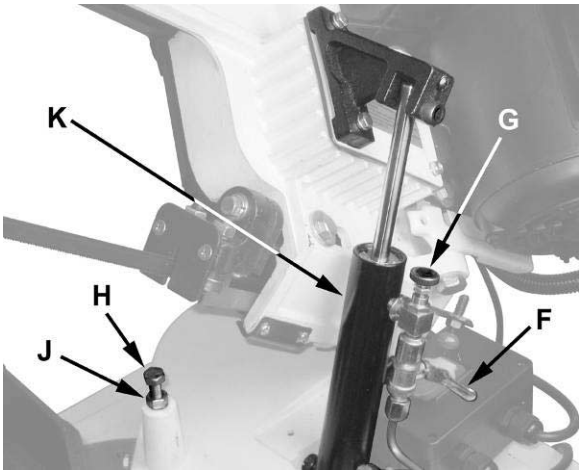


*Figure 11*

## Positioning the Vise

**⚠WARNING Keep hands away from blade while adjusting the vise.**

Refer to Figure 12.

*Securing the Workpiece*

1. Place the *workpiece* (D) against the *fixed jaw* (A) which has already been squared (see *Squaring Vise to Blade* on page 12).
2. Rotate the *handwheel* (E) clockwise to continue the tightening process of the jaw until the workpiece is securely clamped.

*Releasing the Workpiece*

3. When the cut is finished, rotate the *hand wheel* (E) counter-clockwise until the work piece is loosened.

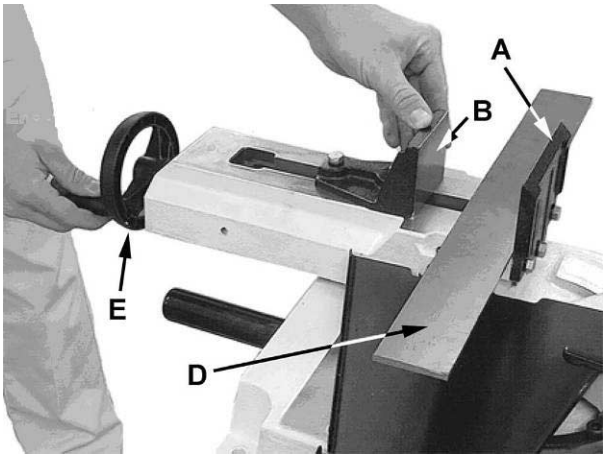


*Figure 12*

## Miter Cuts

There are two sets of holes in the base for mounting the vise assembly. For miter cuts from 0° up to 45°, mount the vise assembly to the rear set of holes. For miter cuts over 45° up to 60°, use the vise in the front set of holes. See Figure 13.

To change the vise to the 60° position:

1. Disconnect band saw from power source.
2. Raise the bow out of the way. **Make sure the hydraulic cylinder is closed (valve lever perpendicular to cylinder) so the bow remains stationary.**
3. Remove the two socket head cap screws and lock washers which secure the vise, and lift off the vise. See Figure 13.
4. Move the bushings from the first set of holes to the other set of holes as shown.
5. Mount the vise to the new set of holes, tightening the two socket head cap screws and lock washers.
6. Remove the socket head cap screw (C, Fig. 10) to allow the bow to swivel.

The cutting operation will now take place at the opposite side of the vise.

7. Swivel the bow until the pointer lines up with 60° on the angle scale, and tighten the handle.

   **Note**: If the handle becomes too constrained to be easily tightened while at the 60° position, lift up on the handle and use a hex wrench to tighten the pin, then fully tighten using the handle itself. See Figure 14.

8. Move the chip pan and the work stop to the other side of the vise.

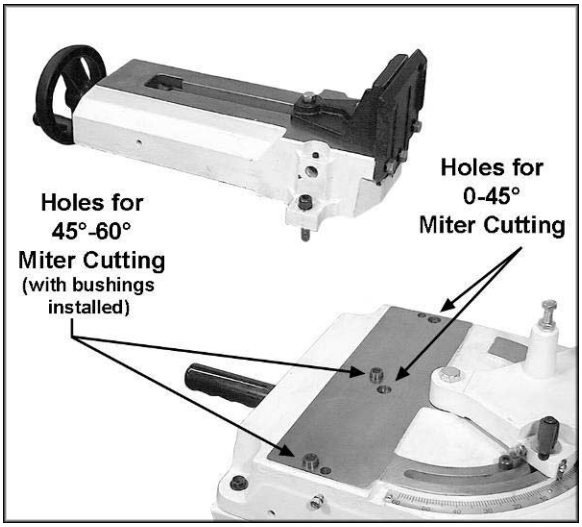


*Figure 13*

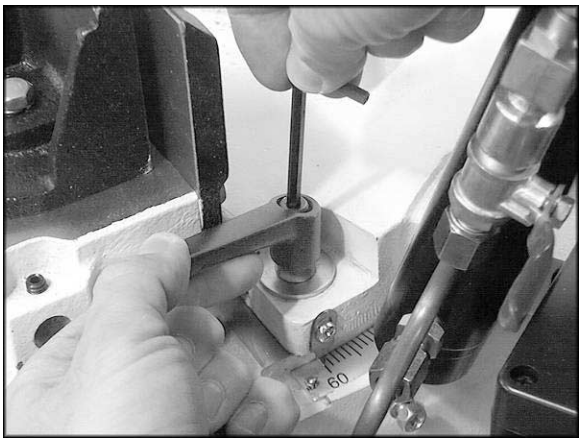


*Figure 14*

## Blade Tension

Use the knob (Figure 15) to tension the blade. Clockwise tightens the blade, counterclockwise loosens it.

## Blade Tracking

**⚠WARNING Tracking the blade requires that the band saw be operating while the back blade cover is removed. Use extreme caution and keep hands away from blade.**

The blade provided with your band saw has already been tracked at the factory and requires no adjustment.

When the blade is replaced, tracking may be required for the new blade. It is recommended that tracking be done by a person experienced in these procedures and aware of the dangers involved.

1. Turn the socket set screw (Figure 15) as needed to shift the angle of the idler wheel. NOTE: This adjustment is sensitive; do it gradually and in small increments allowing the wheel to respond to the changes.
2. Tracking is set properly when the back of the blade lightly touches the wheel shoulder. NOTE: Over-tracking (allowing blade back to rub hard against wheel shoulder) will damage the blade wheels and blade.

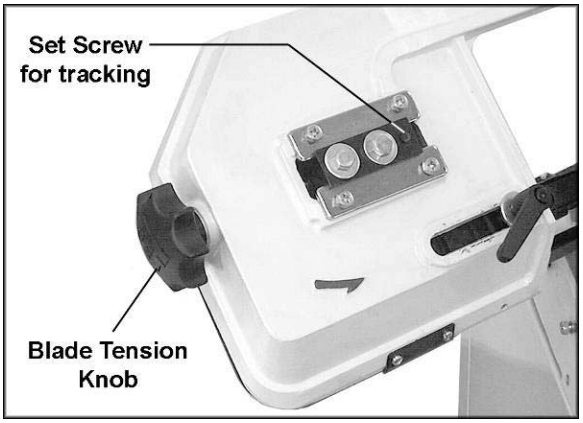


*Figure 15*

## Setting Blade Speed

1. Disconnect band saw from power source.
2. Open the pulley cover.
3. Loosen the knob (see A, Figure 3) and lift up on the motor. Move the belt to the desired pulley grooves. A chart is affixed to the inside of the belt guard showing the positions for the three speeds, 80, 120 and 200 surface feet per minute (SFPM). This chart is also shown in Figure 16.
4. Push the motor back down to tension the belt, and tighten the knob (A, Figure 3).

Material chips or shavings are the best indicator of proper blade speed and downfeed rate. The ideal chip is thin, tightly curled and warm to the touch. Chips that range from golden brown to black indicate excessive force. Blue chips indicate extreme heat from too high a blade speed, which will shorten blade life. Thin or powdered chips indicate insufficient downfeed rate.

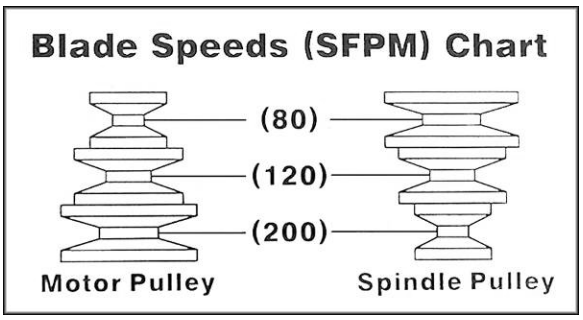


*Figure 16*

## Belt Tension

1. Disconnect band saw from power source.
2. Open the pulley cover.
3. Loosen the knob (see A, Figure 3), and push down on the motor to tighten the belt.
4. Tighten the knob (A, Figure 3).
5. Check the tension by using moderate finger pressure about midway between the pulleys. The belt should deflect about 1/2". See Figure 17.
6. Close the pulley cover.

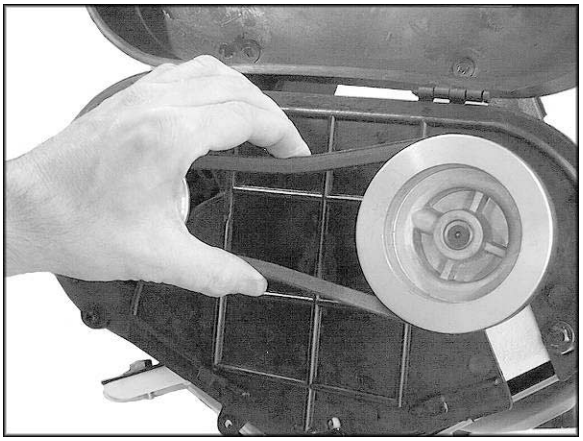

*Figure 17*

## Blade Guide Assembly

The blade guide assembly should be moved as close to the workpiece as possible without interfering with the cutting operation. This allows minimum exposure of the blade. To adjust, loosen handle (A, Figure 18) and slide the assembly into position. Always tighten handle (A, Figure 18) after adjustment.

## Guide Bearings

The blade guide bearings come pre-adjusted from the factory, but should be inspected frequently and future adjustments made as needed, especially after changing blades.

The blade should have already been tensioned and tracked properly before adjusting the blade guides.

1. Disconnect band saw from power source.
2. Loosen slightly the hex cap screw (B, Figure 18) with a 12mm wrench.
3. Slide the guide block (C, Figure 18) down until the thrust bearing (D, Figure 18) just contacts the back edge of the blade.
4. Tighten the hex cap screw (B, Figure 18).
5. The front bearing (E, Figure 18) is eccentric, and should be adjusted so that it just contacts the blade without pinching the blade or interfering with its movement. Proceed as follows:
6. Loosen the hex nut (F, Figure 18) with a 14mm wrench.
7. Use a 12mm wrench to rotate the small hex nut just above the bearing (G, Figure 18) until the bearing is just contacting the blade.

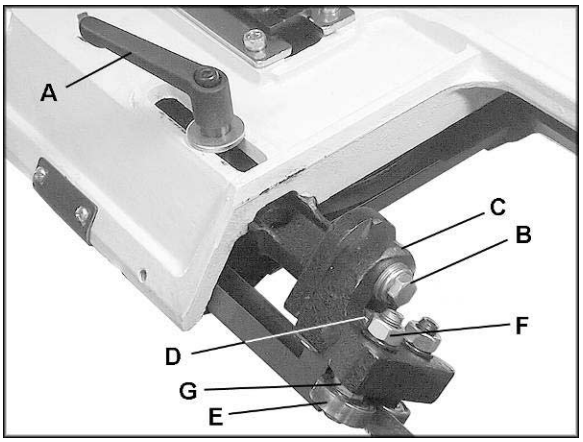


*Figure 18*

8. Hold the bearing at that position with the wrench on the hex nut, to prevent the bearing from moving. At the same time, tighten the upper hex nut (F, Figure 18) with the other wrench.
9. Repeat these steps for the other blade guide assembly.

## Blade Replacement

**⚠WARNING Use caution and proceed slowly when working with or around a band saw blade. Use gloves when handling it.**

1. Disconnect band saw from power source.
2. Remove the knob and the back blade cover from the band saw. See Figure 19.
3. Loosen the handle on the blade guide (A, Figure 18) and lower the blade guide as far as it will go. See Figure 19.
4. Release tension on the blade.
5. Remove old blade and install new one by placing it between the guides and around the band wheels. Make sure the blade is oriented properly so that the teeth will point downward and into the workpiece (Figure 20). An arrow on the the body of the bow indicates blade direction (shown in Figure 15).
6. The blade should be tensioned and tracked properly before operating. See "Blade Tension" and "Blade Tracking" above.

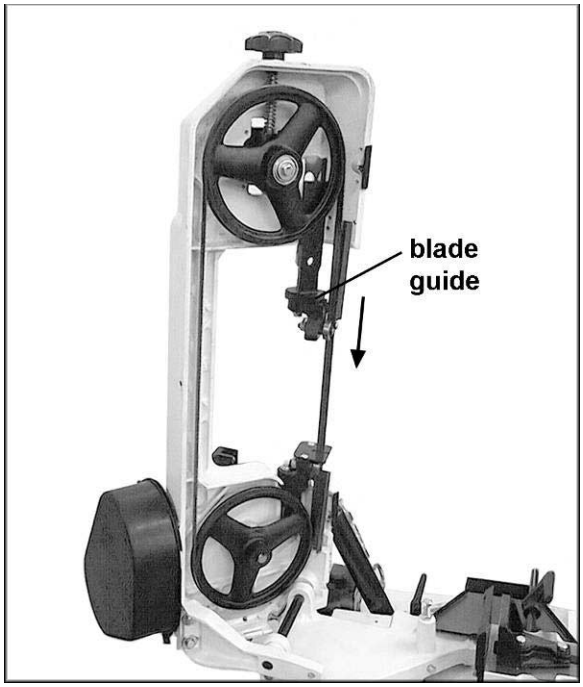


*Figure 19*

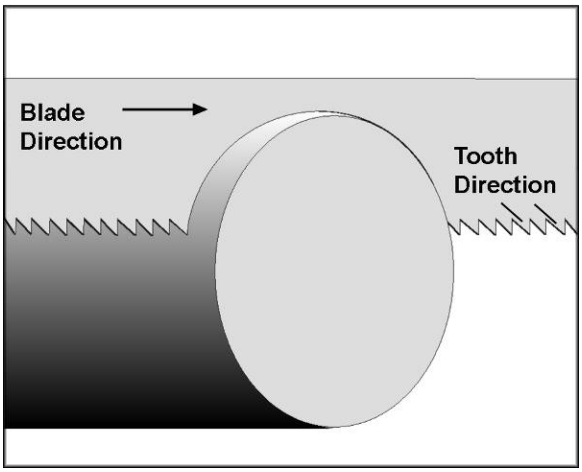


*Figure 20*

## Automatic Shut-Off

At the end of a cut, the screw (A, Figure 21) contacts the paddle switch (C, Figure 21), shutting off the machine. The screw has been set at the factory. If future adjustment is needed, loosen the hex nut (B, Figure 21) with a 12mm wrench and rotate the screw as needed, then re-tighten the hex nut.

NOTE: The bow must be raised in order to re-start the band saw.

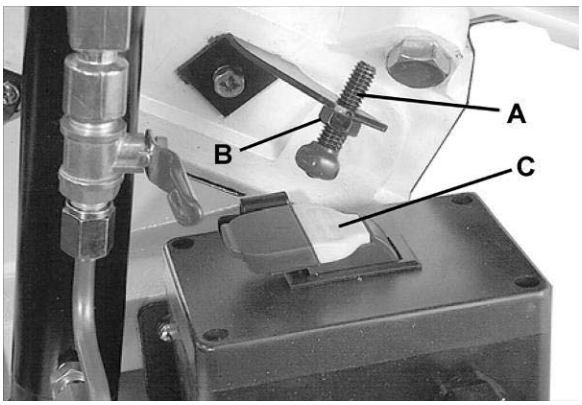


*Figure 21*

## Switch Lock-Out

The switch has a removable piece (C, Figure 21). When this is removed, the band saw cannot be activated. To start the band saw, first snap this piece back into place.

### Vertical Bow Position

1. The band saw can be placed in vertical position to facilitate blade changes, maintenance, etc. Remove the screw (A, Fig. 22) and slide it out to disengage the hydraulic cylinder (B, Fig. 22).
2. Raise the bow all the way.
3. The stop screw (Figure 23) has been pre-set at the factory. If further adjustments are needed, loosen the hex nut and rotate the screw as needed. Re-tighten the hex nut.

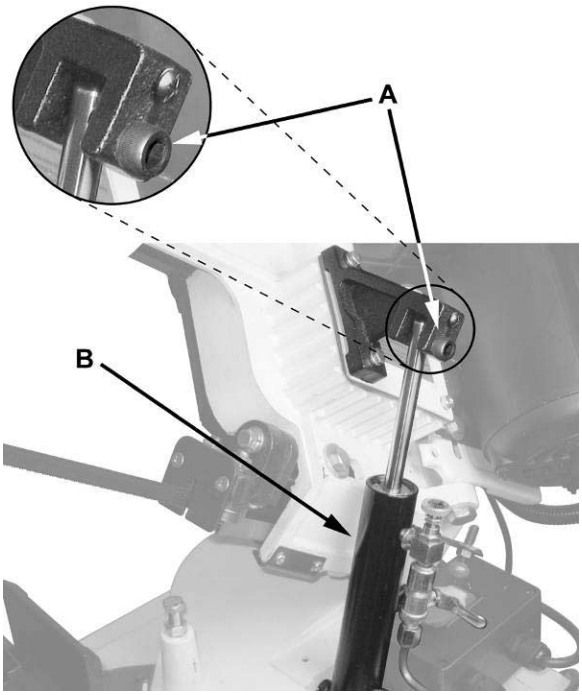


*Figure 22*

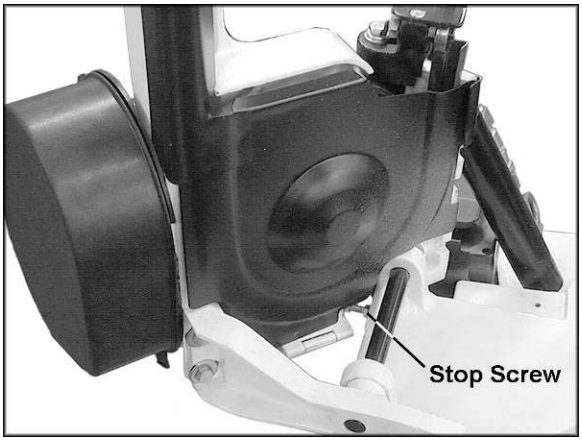


*Figure 23*

# Operation

**Important:** This band saw is designed for dry cutting operations only.

### General Operating Procedure:

1. Verify that all guards, covers, etc. are in place and in working order, the blade is tensioned properly, and the blade guides are set correctly.
2. Position belt on the pulleys to achieve desired speed. Close pulley guard when finished.
3. Place workpiece in vise and tighten vise. The workpiece should be fitted directly between the jaws without adding other objects.

   When the workpiece to be cut is a profiled section, flat piece or special shape, refer to the examples shown in Figure 24 for proper clamping positions. The top row shows acceptable clamping positions, the bottom row shows **un**acceptable positions.

   If the thickness of the profiled section is very thin, a piece which duplicates the profile should be fitted inside the workpiece itself, to prevent the workpiece being crushed between the jaws.

**⚠WARNING** **Never hold a workpiece by hand when cutting it – the workpiece should be firmly secured in the vise. Do not reach into the cutting area during cutting operations.**

4. Pull up the paddle switch to start blade movement.

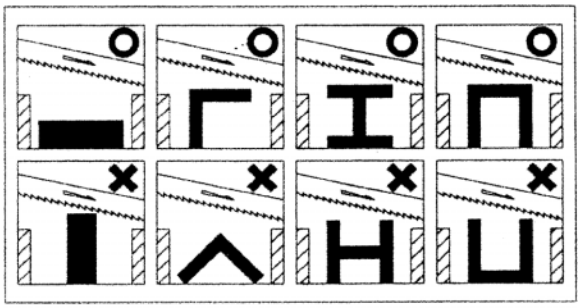

*Figure 24*

5. Open the valve on the hydraulic cylinder to allow the bow to descend in a gradual and controlled manner.
6. The machine will shut off at the completion of the cut. Remove the workpiece.
7. Close the hydraulic cylinder valve, and raise the bow in preparation for the next cut.

# Maintenance

**⚠WARNING Before doing maintenance on the machine, disconnect it from the electrical supply by pulling out the plug or switching off the main switch. Failure to comply may cause serious injury.**

Clean the machine of chips, shavings, etc. with a rag or brush. Do not use your hands.

If the power cord is worn, cut, or damaged in any way, have it replaced immediately.

The ball bearings on the blade guide assemblies are self-contained and sealed. They require no further lubrication.

Occasionally grease the lead screw on the vise.

# Troubleshooting

| Trouble | Probable Cause | Remedy |
|---|---|---|
| Motor will not start. | No incoming power. | Check plug connection. |
| | Blown electrical panel fuses. | Replace fuses. |
| | Defective motor, switch, power cable, or plug. | Qualified electrician/service personnel should inspect these items. |
| Band Saw vibrates excessively. | Stand on uneven surface. | Adjust stand for even support. |
| | Saw blade has cracks. | Replace blade immediately. |
| | Too heavy a cut. | Reduce downfeed rate. |
| Miter cuts not accurate. | Setting of the miter stops is not correct. | Unloosen the screws and adjust the stops to correct positions. Use an adjustable square or protractor to check angle settings. |
| Cuts not square. | Downfeed rate too fast. | Reduce downfeed rate. |
| | 90° angle stop not set correctly. | Adjust stop until blade is square with vise. |
| | Incorrect blade toothing in relation to workpiece. | Use proper blade size and tooth for that particular workpiece. |
| | Incorrect adjustment of bearing guides and guide assembly. | Re-adjust these. See page 16. |
| | Workpiece incorrectly positioned in vise. | Check positioning and clamping in the vise. See Figure 24. |
| | Poor blade tension. | Check and correct if needed. See page 15. |
| Finished surface of workpiece is rough, unsatisfactory. | Blade is dull, or its parameters are not right for thickness of piece being cut. | Sharpen or replace dull blade. Make sure blade is proper size and tooth for workpiece. |
| | Downfeed rate too fast. | Reduce downfeed rate. |
| | Blade tension too low. | Increase blade tension. |
| | Blade speed not correct. | Move belt to proper pulley grooves. |

# Parts

## Replacement Parts

Replacement parts are listed on the following pages. To order parts or reach our service department, call 1-800-274-6848, Monday through Friday (see our website for business hours, www.waltermeier.com). Having the Model Number and Serial Number of your machine available when you call will allow us to serve you quickly and accurately.

## Parts List: HBS-56S Band Saw

| Index No. | Part No. | Description | Size | Qty |
|---|---|---|---|---|
| 1 | TS-0081031 | Hex Cap Screw | 5/16”-18x3/4” | 7 |
| 2 | TS-0561011 | Hex Nut | 1/4”-20 | 1 |
| 3 | TS-0680021 | Flat Washer | 1/4” | 1 |
| 8 | TS-0680031 | Flat Washer | 5/16” | 11 |
| 11 | TS-0051061 | Hex Cap Screw | 5/16”-18x1-1/4” | 4 |
| 12 | TS-0561021 | Hex Nut | 5/16”-18 | 4 |
| 16 | HVBS462-016 | Electric Cord | | 1 |
| 17 | HVBS462-017 | Pivoting Rod | | 1 |
| 19 | HVBS462-019 | Stock Stop | | 1 |
| 20 | TS-0270021 | Socket Set Screw | 5/16”-18x5/16” | 4 |
| 21 | HVBS462-021 | Stock Stop Rod | | 1 |
| 25 | TS-0081031 | Hex Cap Screw | 5/16”-18x3/4” | 1 |
| 26 | HVBS56M-026E | Plum Knob | | 1 |
| 27 | HVBS462-027 | Wheel Handle | | 1 |
| 28 | HVBS462-028 | Hand Wheel | | 1 |
| 31 | TS-0051051 | Hex Cap Screw | 5/16”-18x1” | 1 |
| 35 | TS-0680041 | Flat Washer | 3/8”x1” | 3 |
| 44 | HB56M-044 | Electric Cable | | 1 |
| 50 | TS-0081031 | Hex Cap Screw | 5/16”-18x3/4” | 1 |
| 51 | TS-0680031 | Flat Washer | 5/16”x23xt3mm | 3 |
| 54 | HVBS56M-054 | Pivot Bracket | | 1 |
| 57 | HVBS56M-057 | Adjustable Bracket LH | | 1 |
| 57A | HVBS56M-057A | Adjustable Bracket Assembly LH | | 1 |
| 58 | HVBS462-058 | Knob | 1/4” | 1 |
| 60 | HVBS462-060 | C-Clip | S10 | 4 |
| 61 | BB-6000ZZ | Ball Bearing | 6000ZZ | 6 |
| 62 | HVBS462-062 | Guide Pivot | | 2 |
| 62-1 | HVBS462-062-1 | Centrifugal Guide Pivot | | 2 |
| 62-1A | HVBS462-062-1A | Eccentric Shaft Assembly (Includes: #60,61,62-1) | | 1 |
| 62A | HVBS462-062A | Center Shaft Assembly (Includes: #60-62) | | 1 |
| 63 | HVBS462-063 | Bearing Shaft Pin | | 2 |
| 64-1 | HVBS462-064-1 | Blade Seat Left | | 1 |
| 64-2 | HVBS462-064-2 | Blade Seat Right | | 1 |
| 65 | HVBS56M-065 | Adjustable Bracket RH | | 1 |
| 65A | HVBS56M-065A | Adjustable Bracket Assembly RH | | 1 |
| 66 | HVBS56M-066 | Lock Knob | | 1 |
| 68 | TS-0813021 | Flat Head Machine Screw | 1/4”X3/8” | 2 |
| 69 | HVBS462-069 | Deflector Plate | | 1 |
| 70 | TS-0561031 | Hex Nut | 3/8” | 4 |
| 71 | HVBS462-071 | Blade Wheel Drive | | 1 |
| 72 | HVBS462-072 | Bearing Cover | | 2 |
| 73 | HVBS462-073 | Key | 5x5x25 | 3 |
| 74 | HVBS56M-060 | C-Clip | S15 | 1 |
| 75 | HVBS462-075 | Hex Cap Bolt (w/Washer) | 1/4”x1/2” | 8 |
| 77 | HVBS462-077 | Idle Blade Wheel | | 1 |
| 78 | TS-0680031 | Flat Washer | 5/16” | 2 |
| 79 | HVBS462-079 | Blade Tension Knob | 3/8” | 1 |
| 80 | HVBS462-080 | Spring | | 1 |
| 81 | HVBS56M-081 | Saw Bow | | 1 |
| 83 | TS-0070031 | Hex Cap Screw | 1/2”-13x1-1/2” | 2 |
| 84 | HVBS56M-084 | Motor Mount Plate | | 1 |
| 84-1 | HVBS56M-084-1 | Tension Bracket | | 1 |
| 85 | HVBS463-085 | Motor | 1/2HP 1ph | 1 |
| | HVBS463-085-1 | Capacitor Cover (not shown) | | 1 |
| | HVBS463-085-2 | Capacitor (not shown) | | 1 |

## Parts List: HBS-56S Band Saw

| Index No. | Part No. | Description | Size | Qty |
|---|---|---|---|---|
| 86 | HVBS462-086 | Motor Pulley | | 1 |
| 87 | BB-6202ZZ | Ball Bearing | 6202ZZ | 6 |
| 88 | HVBS462-088 | Bearing Bushing | | 1 |
| 89 | OS-15375 | Oil Seal | | 2 |
| 90 | HVBS462-090 | Transmission Wheel Shaft | | 1 |
| 91 | HVBS462-091 | Worm Gear | | 1 |
| 92 | HVBS462-092 | Gear Box Gasket | | 1 |
| 93 | HVBS462-093 | Gear Box Cover | | 1 |
| 94 | HVBS462-094 | Worm Gear (w/Shaft) | | 1 |
| 95 | HVBS462-095 | Spring Pin | | 1 |
| 96 | HVBS462-096 | Bearing Bushing | | 1 |
| 97 | TS-0050011 | Hex Cap Screw | 1/4”-20x1/2” | 2 |
| 97-1 | TS-0680021 | Flat Washer | 1/4” | 3 |
| 99 | HVBS462-099 | Spacer | | 1 |
| 100 | HVBS462-100 | Flat Cross Head Screw | 5/32”x3/8” | 8 |
| 101 | HVBS462-101 | Worm Gear Pulley | | 1 |
| 102 | TS-0720081 | Lock Washer | 5/16” | 2 |
| 103 | HVBS462-103 | Blade Tension Sliding Plate | | 1 |
| 104 | TS-0270051 | Socket Set Screw | 5/16”-18x1/2” | 2 |
| 105 | HVBS462-105 | Spring Pin | | 1 |
| 106 | HVBS462-106 | Sliding Plate Draw Block | | 1 |
| 107 | HVBS462-107 | Blade Wheel Shaft | | 1 |
| 108 | HVBS462-108 | Shaft Block | | 1 |
| 109 | HVBS462-109 | Blade Tension Sliding Guide | | 2 |
| 110 | HVBS462-110 | Motor Pulley Cover Assembly | | 1 |
| 112 | VB-A22 | V-Belt | A22 | 1 |
| 113 | 414301 | Blade | 5" X .025 X 64.5 | 1 |
| 114 | TS-0680041 | Flat Washer | 3/8” | 4 |
| 117 | TS-0060061 | Hex Screw | 3/8”-16x1-1/4” | 1 |
| 120 | HVBS462-120 | Bushing | | 1 |
| 123 | TS-0050031 | Hex Cap Screw | 1/4”-20x3/4” | 1 |
| 125 | TS-0081031 | Hex Cap Screw | 5/16"-18x3/4" | 1 |
| 126 | HVBS462-126 | Bushing | | 1 |
| 132 | HVBS462-132 | Blade Guard-Right | | 1 |
| 132-1 | HVBS462-132A | Blade Guard-Left | | 1 |
| 141 | TS-0561021 | Hex Nut | 5/16"-18 | 1 |
| 142 | HBS56S-142 | Switch Cut Off Trip | | 1 |
| 144 | TS-0051061 | Hex Cap Screw | 5/16”-18x1-1/4” | 1 |
| 254 | HBS56S-254 | Support Rod | | 1 |
| 255 | TS-0267032 | Socket Set Screw | 1/4"x5/16" | 1 |
| 256 | TS-0680011 | Flat Washer | 3/16" | 1 |
| 257 | TS-081C022 | Pan Head Phillips | 10-24x3/8" | 1 |
| 258 | HBS56S-258 | Cylinder Assembly | | 1 |
| 259 | HBS56S-259 | Cylinder Upper Support | | 1 |
| 262 | TS-0050051 | Hex Cap Screw | 1/4"-20x1" | 2 |
| 263 | TS-0720071 | Spring Washer | 1/4" | 2 |
| 300 | HBS56S-300 | Stand Top | | 1 |
| 301 | HBS56S-301 | Working table | | 1 |
| 303 | HBS56S-303 | Wall plate | | 1 |
| 304 | HBS56S-304 | Swivel Base(Upper) | | 1 |
| 307 | HBS56S-307 | Acme Screw | | 1 |
| 308 | HBS56S-308 | Bushing | | 2 |

## Parts List: HBS-56S Band Saw

| Index No. | Part No. | Description | Size | Qty |
|---|---|---|---|---|
| 309 | TS-0720081 | Lock Washer | 5/16" | 5 |
| 310 | TS-0208071 | Socket HD Cap Screw | 5/16"-18x1-1/4" | 2 |
| 311 | TS-0081031 | Hex Cap Screw | 5/16"-18x3/4" | 3 |
| 312 | TS-0680042 | Flat Washer | 3/8” | 1 |
| 313 | TS-0090061 | Hex Cap Screw | 3/8"-16x1-1/4" | 1 |
| 314 | TS-0267041 | Set Screw | 1/4"x3/8" | 2 |
| 315 | HBS56S-315 | Positioning Ring | | 1 |
| 318 | TS-0211112 | Socket HD Cap Screw | 1/2"-20x2-1/2"L | 1 |
| 319 | TS-0561031 | Hex Nut | 3/8"-16 | 1 |
| 320 | TS-0060071 | Hex Cap Screw | 3/8"-16x1-1/2" | 1 |
| 324 | HBS56S-324 | Handle | | 1 |
| 325 | HBS56S-325 | Carriage Screw | 3/8" | 1 |
| 328 | HBS56S-328 | Switch Base | | 1 |
| 329 | HBS56S-329 | Cross Round Head Screw | 3/16"x3/8" | 2 |
| 330 | HBS56S-330 | Switch Complete Assembly | | 1 |
| 330-1 | HBS56S-330-1 | ON/OFF Switch | | 1 |
| 330-2 | HBS56S-330-2 | Screw | | 4 |
| 330-3 | HBS56S-330-3 | Electrical Box | | 1 |
| 330-4 | HBS56S-330-4 | Cable Connector | | 2 |
| 330-5 | HBS56S-330-5 | Screw | | 2 |
| 338 | HBS56S-338 | Scale | | 1 |
| 352 | HBS56S-352 | Pointer | | 1 |
| 353 | HBS56S-353 | Cross Round Head Screw | 3/16"x1/2" | 1 |
| 354 | TS-0050031 | Hex Cap Screw | 1/4"-20x3/4" | 2 |
| 355 | TS-0570011 | Hex Nut | 1/4"-20 | 2 |
| 356 | TS-0208021 | Socket HD Cap Screw | 5/16"-18x1/2" | 1 |
| 379 | HBS814GH-200 | Cross Round Head Screw | 1/4”-20x3/8” | 2 |
| 380 | HVBS56M-380 | Blade Back Safety Cover | | 1 |
| 382 | HBS56S-382 | Movable vise plate | | 1 |
| 383 | HBS56S-383 | Bracket | | 1 |
| 384 | HBS56S-384 | Stand Complete Assembly | | 1 |
| 384-1 | HBS56S-384-1 | Side Plate(left) | | 1 |
| 384-2 | HBS56S-384-2 | Side Plate(Right) | | 1 |
| 384-3 | HBS56S-384-3 | Chip Pan | | 1 |
| 384-4 | HBS56S-384-4 | Front Door | | 1 |
| 384-5 | HBS56S-384-5 | Knob | | 1 |
| 384-6 | HBS56S-384-6 | Wheel Base | | 1 |
| 384-7 | HBS56S-384-7 | Hand Rod | | 1 |
| 384-8 | HBS56S-384-8 | Rubber Head Screw | | 2 |
| 384-9 | TS-0051031 | Hex Head Screw | 5/16” –18x3/4” | 12 |
| 384-10 | TS-0680031 | Flat Washer | 5/16”x23xt2mm | 33 |
| 384-11 | TS-0561021 | Hex Nut | 5/16”-18 | 12 |
| 384-12 | TS-0051071 | Hex Head Screw | 5/16”-18x1-1/2” | 4 |
| 384-14 | TS-0561021 | Hex .Nut | 5/16”-18 | 4 |
| 384-15 | HBS56S-384-15 | Plate | | 1 |
| 384-16 | HBS56S-384-16 | Color Strip | | 1 |
| 384-17 | TS-0640081 | Nylon Nut | 5/16”-18 | 1 |
| 385 | HBS56S-385 | Wheel Complete Assembly | | 1 |
| 385-1 | HBS56S-385-1 | Wheel | | 1 |
| 385-2 | 7015-308 | Flat Washer | 5/8”x30xt3 | 4 |
| 385-3 | 5519932 | Cotter Pin | 3x25 | 2 |
| 385-4 | HBS56S-385-4 | Wheel Rod | | 1 |

## Parts List: HBS-56S Band Saw

| Index No. | Part No. | Description | Size | Qty |
|---|---|---|---|---|
| 386 | TS-0060061 | Hex Cap Screw | 3/8”-16x1-1/4” | 4 |
| 387 | HBS814GH-092 | Flat Washer | 10x23xt2 | 4 |
| 388 | HBS56S-388 | Special Cap Screw | | 1 |
| 389 | HBS56S-389 | Protect Plate | | 1 |
| 390 | HBS56S-390 | Rivet | Ø2x5 | 3 |
| 392 | TS-081C022 | Pan head Phillips | 10–24x3/8” | 1 |
| 393 | HBS56S-393 | Wire Ring | | 1 |
| 394 | TS-081C032 | Cross Round Head Screw | 10-24x1/2” | 1 |
| 395 | TS-0560071 | Hex Nut | 10-24 | 1 |
| 396 | TS-0680041 | Flat Washer | 3/8” | 1 |
| | HVBS463-085-01 | Capacitor Cover (not shown) | | 1 |
| | HVBS462-085-02 | Capacitor (not shown) | | 1 |

## Bow Assembly

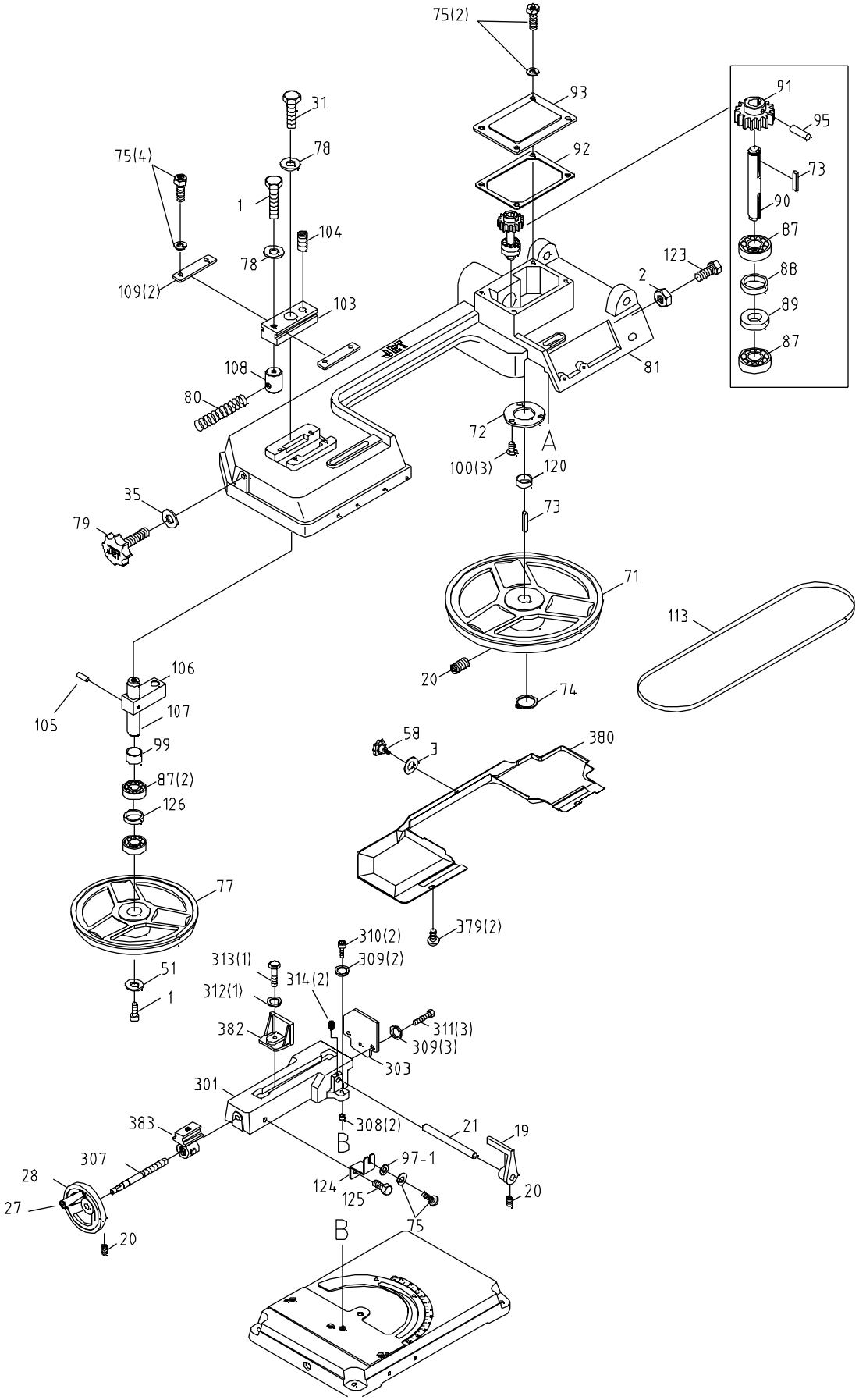

## Bow Assembly (Page 2 of 3)

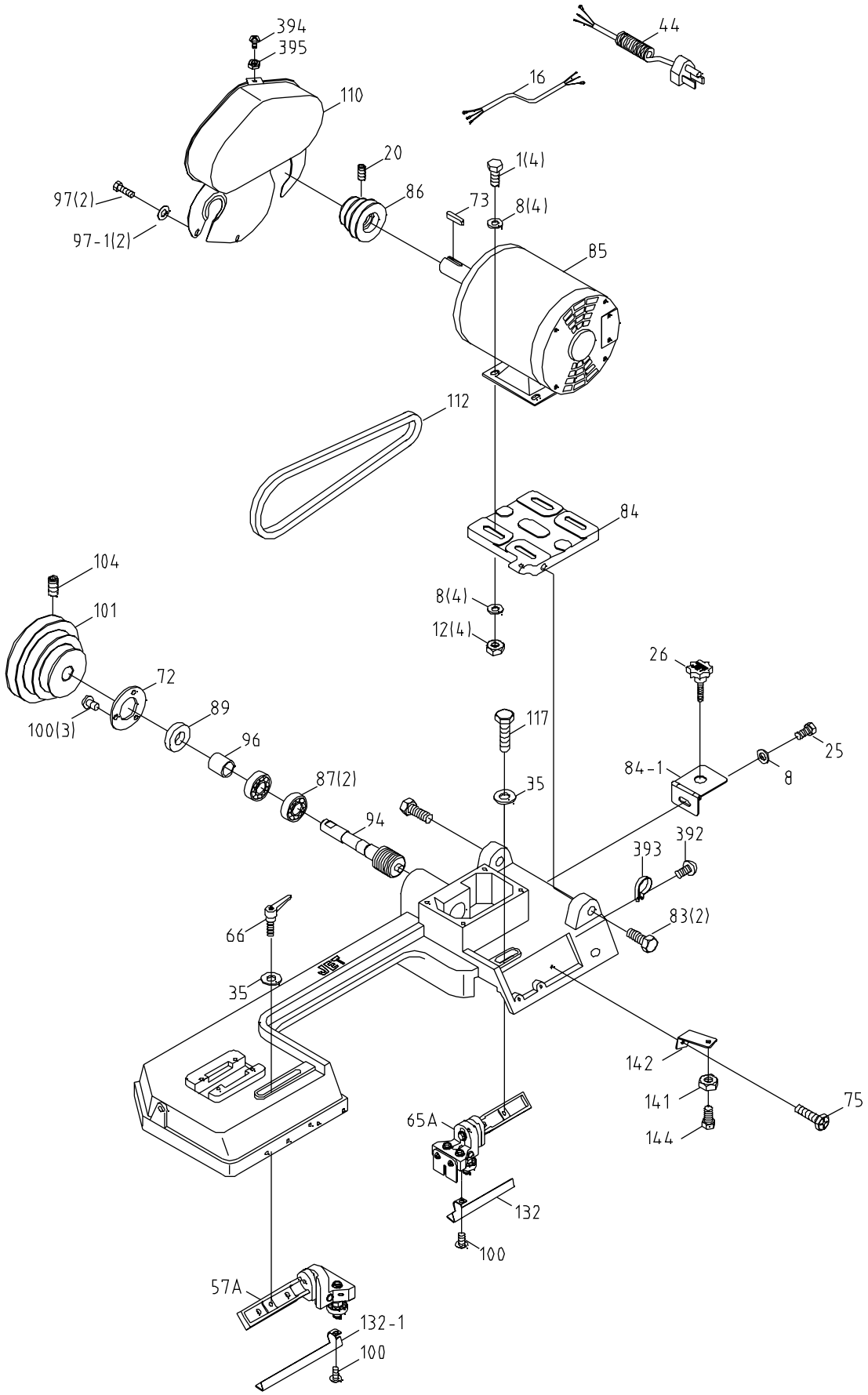

## Bow Assembly (Page 3 of 3)

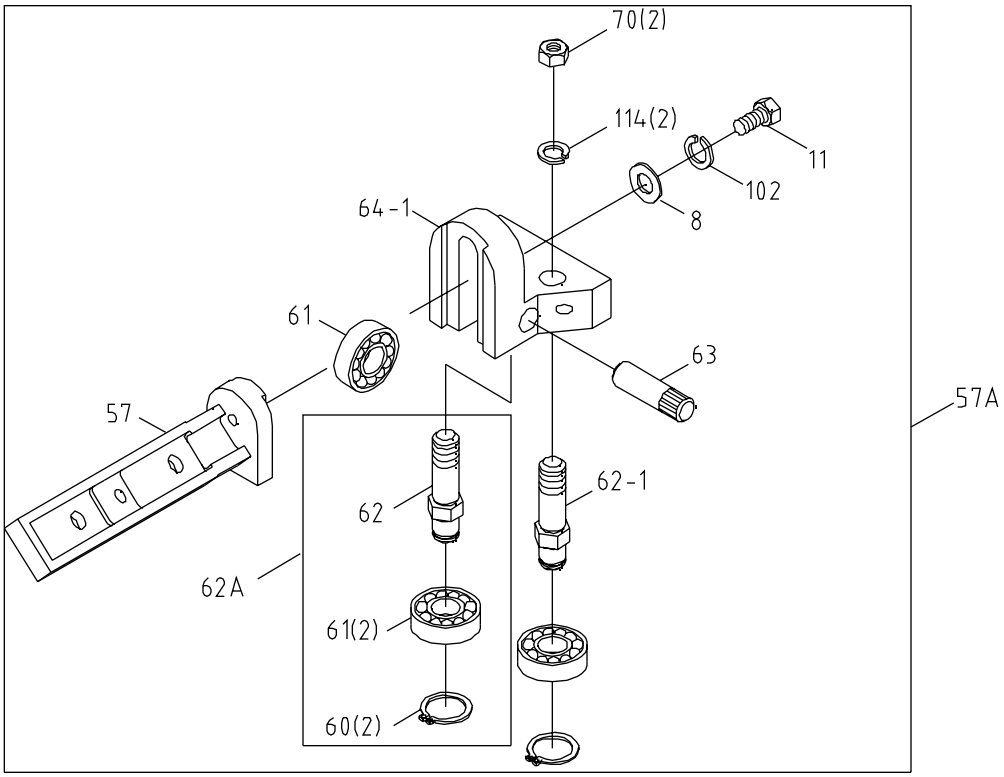


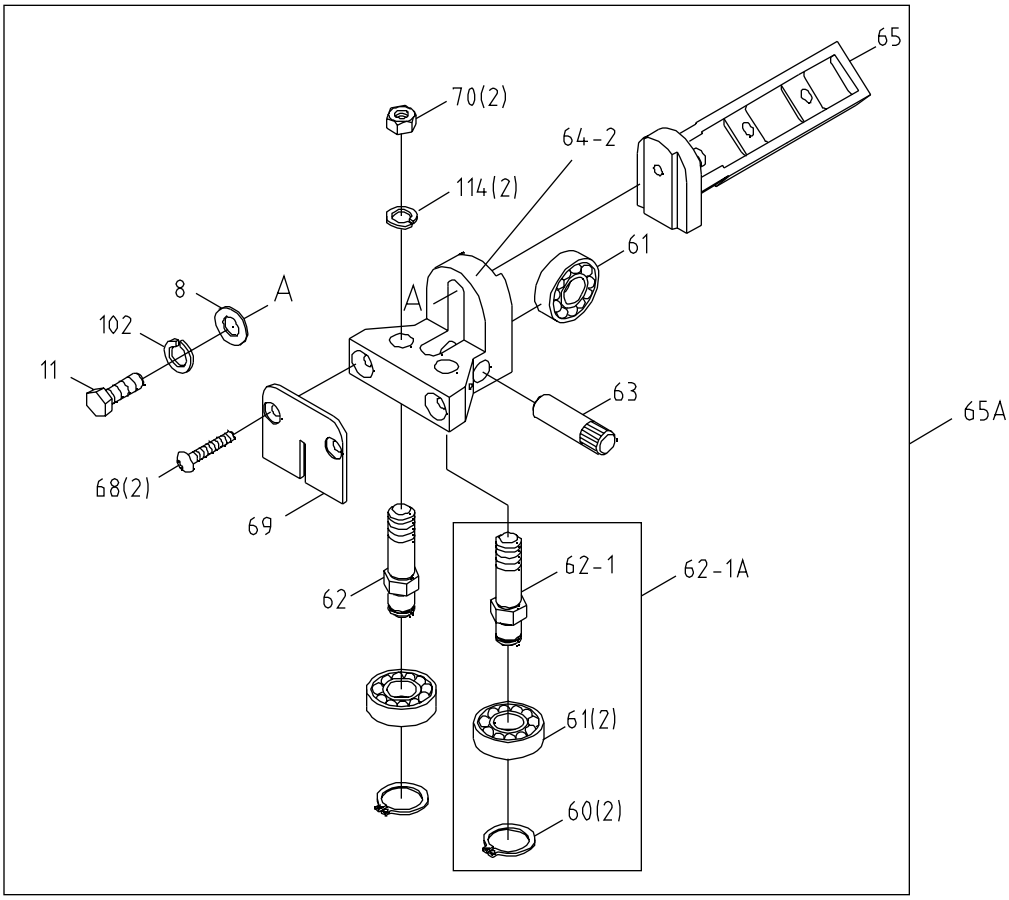

## Base and Cabinet Assembly

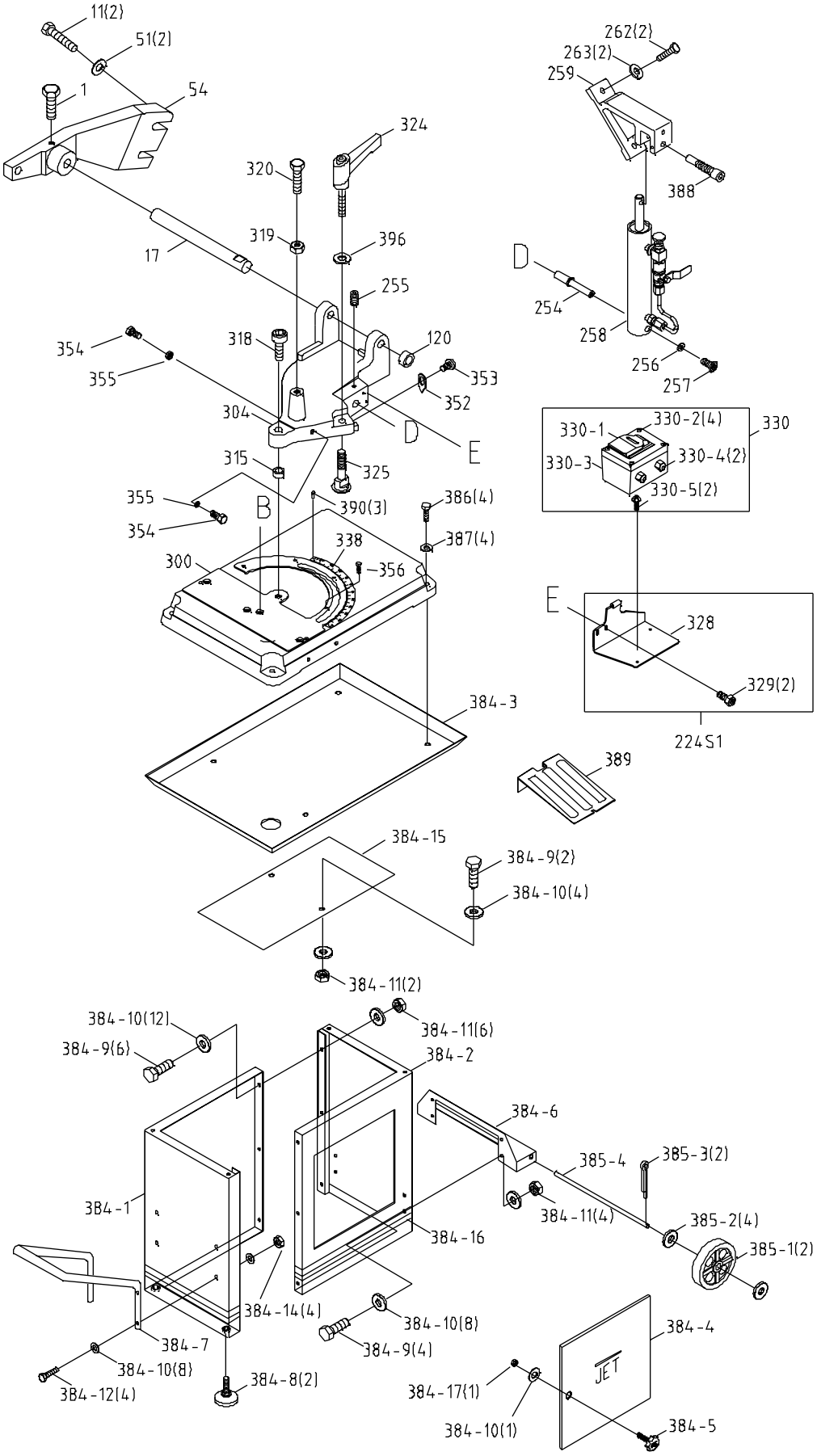

## Electrical Connections

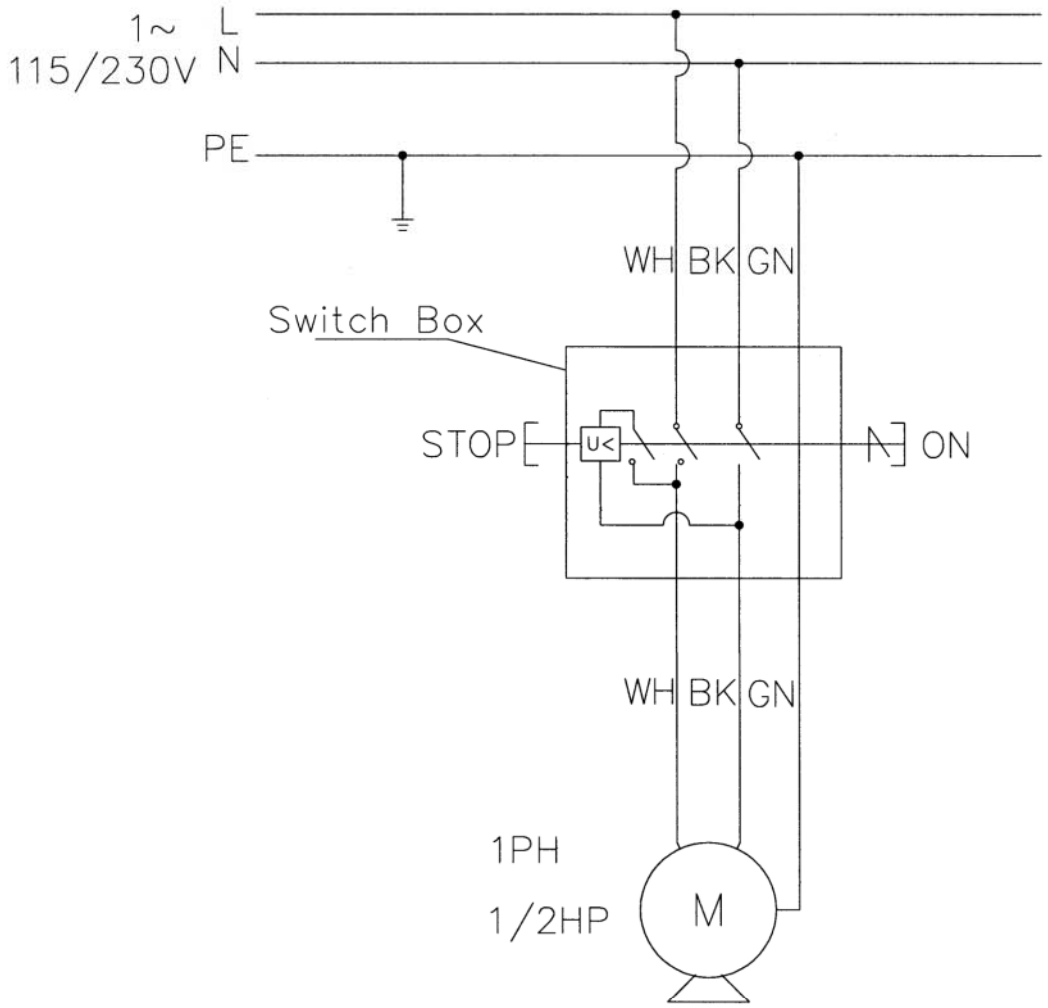


STOP : Stop Button Switch
ON : Start Button Switch

# Notes

# Notes

**WALTER MEIER (Manufacturing) Inc.**
427 New Sanford Road
LaVergne, Tennessee 37086
Phone: 800-274-6848
www.waltermeier.com